Ford Valve Cover Inspection for Hose Routing

UPDATE

Models Affected: All BBCV Visions with Ford Engines

SU1701 - SERVICE UPDATE -

WARNING: Always follow all Federal, State, Local, and Shop safety standards and use proper safety equipment when performing these procedures. Engine MUST be cool before proceeding.

On certain BBCV Vision with Ford engines (propane, gasoline or CNG buses) the brakes lines and/or wiring harnesses that route from behind the engine forward may come in contact with the left-hand engine valve cover. Inspect the left-hand engine valve cover for possible contact. If the brake lines/wiring harness is contacting valve cover, reroute per instructions on Pages 3 and 4.

INSPECTION

1. Park bus on level surface, apply parking brake, turn off ignition, remove keys, and chock wheels.

2. Open hood and inspect left-hand rear valve cover for any contact by brake hoses and/or wiring harnesses.

3. If no contact and there is clearance between the valve cover and brake hoses and/or wiring harnesses, no action is required. If there is contact, follow the procedure on Pages 3 and 4 for adding a bracket, saddle, and cable tie to maintain clearance. See example on Page 2 of air brakes hoses rubbing valve cover and example of clearance with hydraulic brake lines.

Example of Air Brake tubing rubbing valve

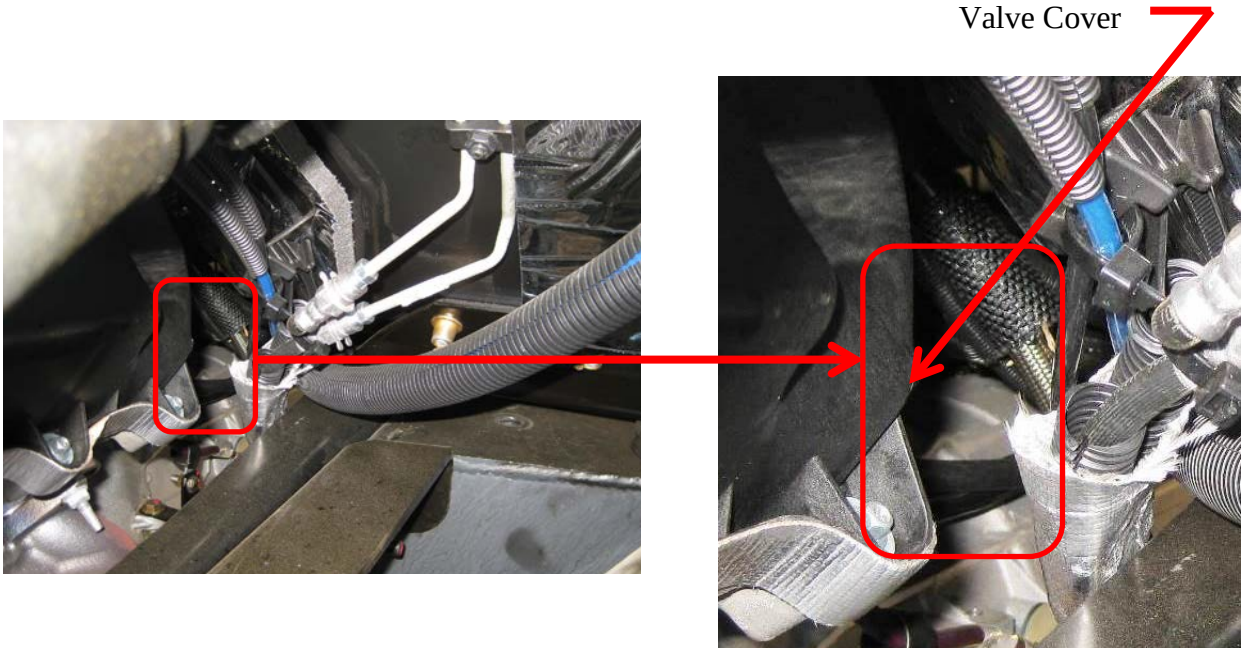

Example of clearance between valve cover and hydraulic brake

REROUTING PROCEDURE

1. Park bus on level surface, apply parking brake, turn off ignition, remove keys, and chock wheels.

2. **CAUTION: Engine and manifold MUST be ambient temperature before rerouting /clamping of brake lines and/or wiring harnesses.**

3. To maintain distance between the brake lines/wiring harnesses and valve cover, install a bracket, saddle, and cable tie onto existing stud on driver's control module (DCM), per illustration on Page 4. It may be necessary to make a small incision in the optional insulation to expose the stud located on the angled surface of the DCM. If a bracket, saddle and cable tie are already installed and the brake lines/wiring harnesses contact the valve cover, remove cable tie, reroute brake lines/wiring harnesses to clear valve cover and install new cable tie.

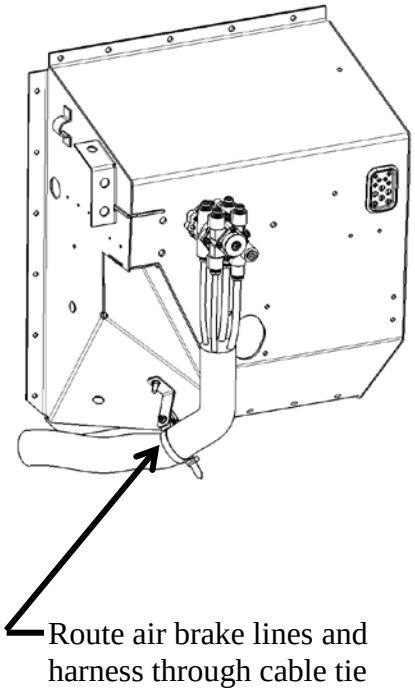

AIR BRAKE

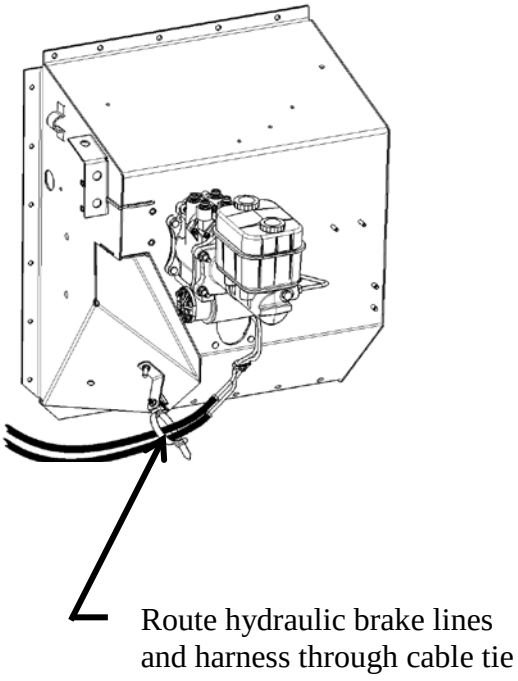

HYDRAULIC BRAKE

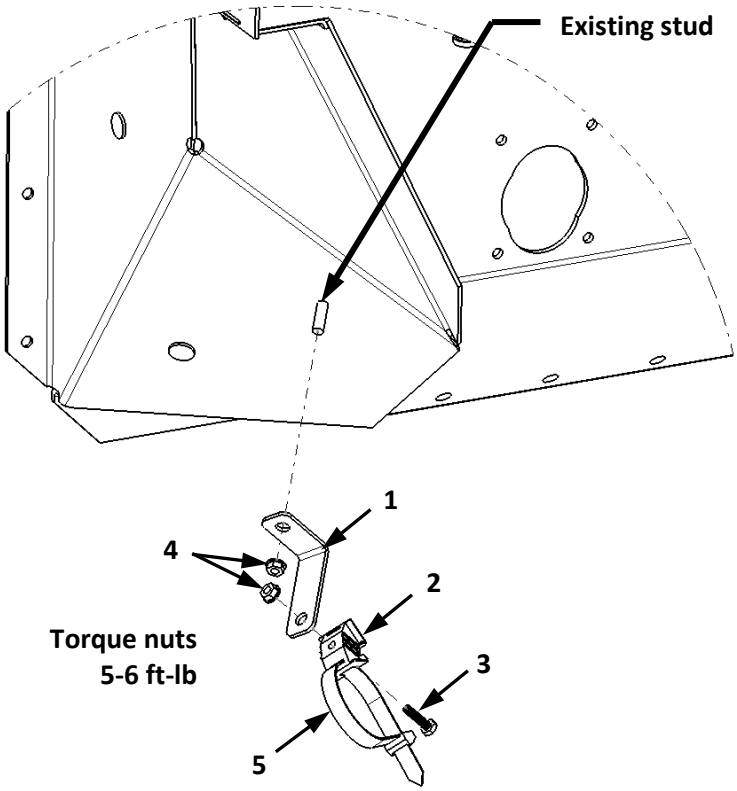

Key	Part Number	Description	Qty
1	00070690	BRACKET,MOUNTING,PDU PWR BATTERY CABLE,BBCV	1
2	00030876	2 WAY SADDLE MOUNT S2HM25	1
3	00870477	CAPSCREW,HEX HD,1/4-20 X 1,GR 8,YEL ZN DICH	1
4	00659979	NUT,HEX,FLANGE SER,1/4-20,BLACK ZINC	2
5	00029998	TIE,CABLE,250LB	1