SERVICE BULLETIN

Bulletin Type.....: **Safety Recall**

Bulletin No.....: TS-S120 (Rev01)

Bulletin Name.....: Fasteners and Bracket of Leveling Valve Linkage System

Bulletin Ref No.....: 700003234

Revision No.....: 01

NHTSA.....: **17V310**

Release Date.....: 28.12.2017

Vehicle Model.....: TS45

Fiat Rate Code.....: TSS120

Flat Rate Time.....: 75'

Subject: Fasteners and Bracket of Leveling Valve Linkage System

Summary: This safety recall technical service bulletin gives instruction about how to remedy your vehicle.

Rev. Details: This bulletin has been revised to add visual inspection process of the tag axle tires.

Bulletin Responsible: Fikret ÖZCAN

Published by&Approved by: Hakan GÜNERDEM

Welding on the Chassis

• Always disconnect the batteries (starting with the negative lead).

• Disconnect the connectors of electrical and electronic equipment (electronic control units, sensors and actuators) if they are less than 2 meters away from the chassis part to be welded or the earth terminal of the welding equipment.

• The earth terminal should never be attached to vehicle components such as engine, axles and springs. Arcing on these parts is not permitted, because of the risk of damage to bearings, springs, etc.

• The earth terminal must make good contact and be placed as close as possible to the part to be welded.

• Plastic pipes, rubber parts and parabolic springs should be well protected against welding spatter and temperatures higher than 70°.

• The contact switch must not be in the accessory or contact position. The contact key should be removed.

GENERAL PRECAUTIONS

1. Suggested Dress Code:

WARNING

Dress correctly to avoid injury and damage to the vehicle.

2. Before Starting the Work:

Always wear protective clothing. Do not wear any damaged or loose-fitting clothing and remove jewelry before starting the work. In case of long hair use hairnet.
The illustration above shows some of the correct and incorrect clothing that should be worn during work. Sharp edges should be avoided e.g belts, watches, necklaces etc.

3. Interior materials protection:

Seats, trimming, upholstery stuff and carpeting should be protected with appropriate coverings.

Included Parts List

No	Part No	Part Name	Picture	Qty	Unit
1	RP316115Y	BRACKET, LEVELING VALVE LEFT	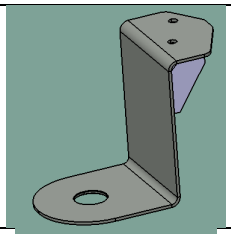	1	Pc
2	RP316114Y	BRACKET, LEVELING VALVE RIGHT	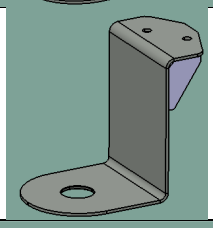	1	Pc
3	BCMB08030B30Y	BOLT	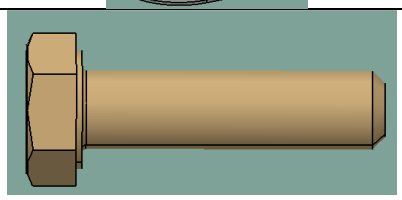	4	Pcs
4	MF450005Y	WASHER,PLAIN (A 8.4)	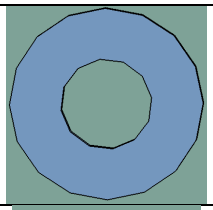	10	Pcs
5	MF430005Y	NUT, AKB (M8X1.25)	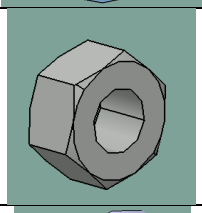	4	Pcs
6	MF450405Y	SPRING LOCK WASHER (B 8)	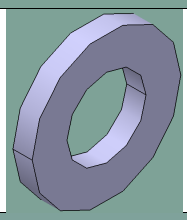	6	Pcs
7	MF101257Y	BOLT,AKB(M8x25)	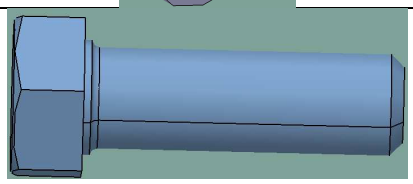	2	Pcs

Application:

1-Open the fender:

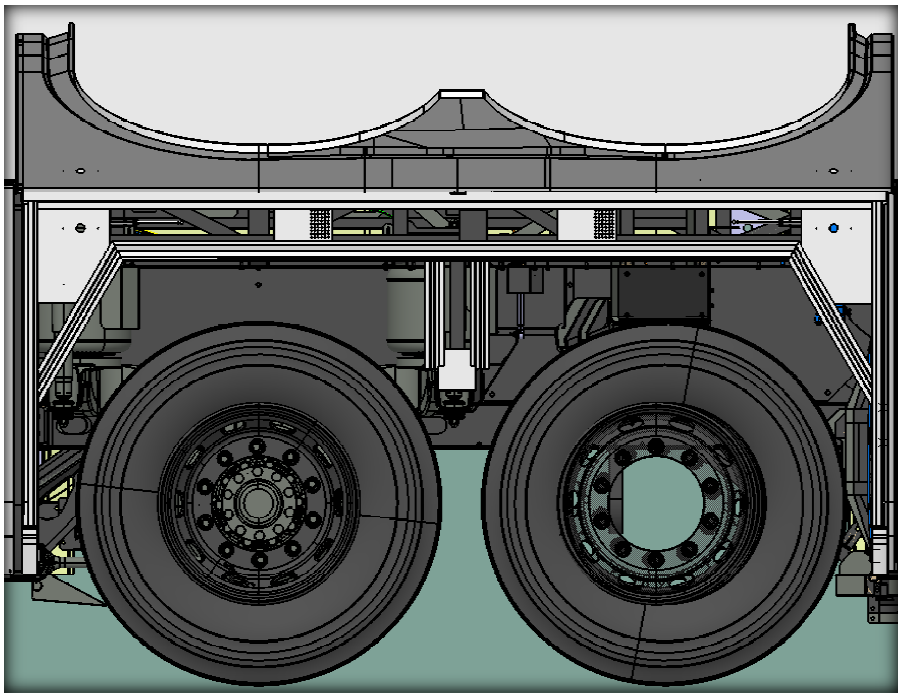

2- Dismount the shock absorber's lower nut;

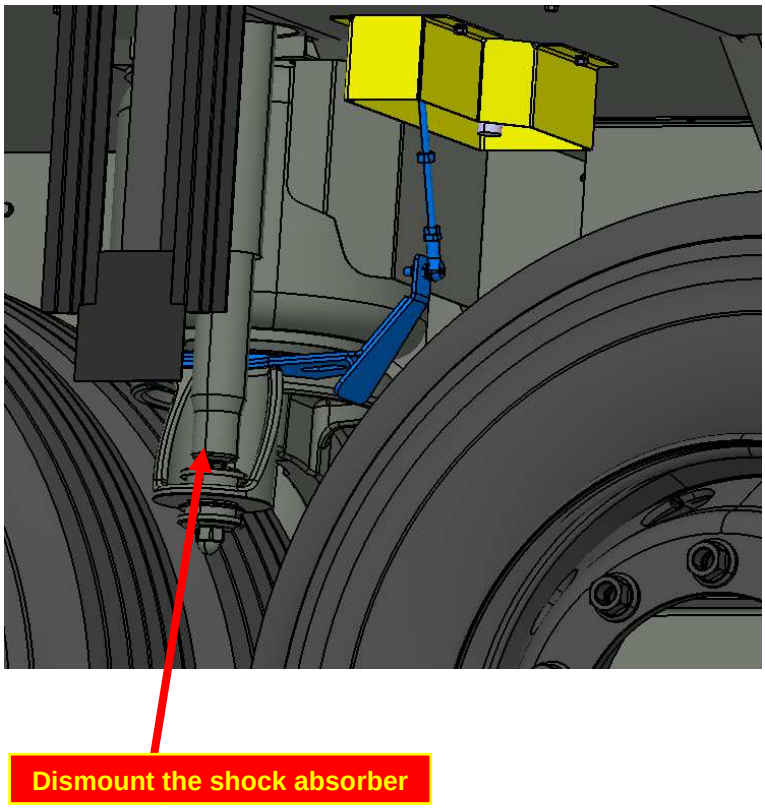

3- Dismount the current bracket's bolt which is marked with red arrow and mount the new bolt (MF101257Y) with using spring lock washer and washer.

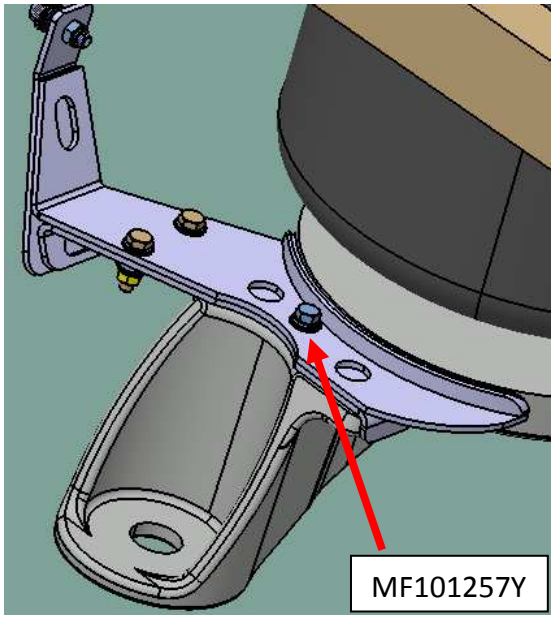

4- Mark the points where the new reinforcement bracket's holes coincide on the leveling bracket. After marking the spots which you need to drill, drill 3/8" holes to the leveling bracket. After drilling the holes, mount the new reinforcement bracket with bolt (BCMB08030B30Y), spring washer (MF450405Y), plain washer (MF450005Y) and nut (MF430005Y).

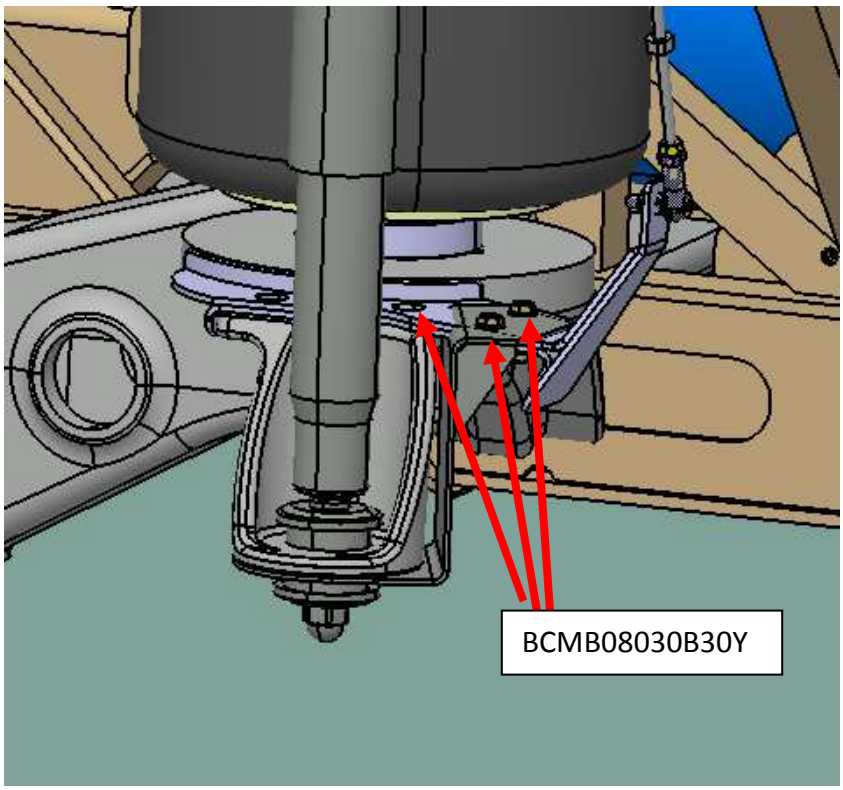

5- After the visual inspection of the tag axle tires, if the surface of the tires are damaged then replace the damaged tire with a new one according to the Temsa tire specifications.

6- Close the fender.

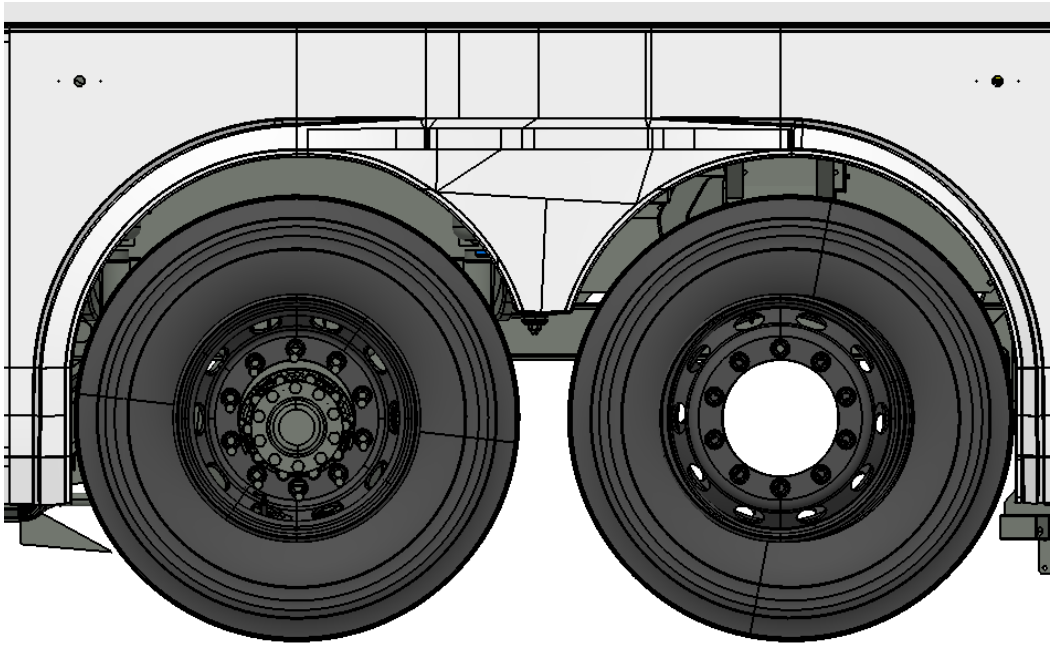

FLAT-RATE BREAK DOWN

Application	**Time**
1. Preparation	10 Mins
2. Opening the fenders for both sides	15 Mins
3. Removing the shock absorbers' lower nuts	10 Mins
4. Drilling the new holes on leveling brackets	10 Mins
5. Reinforcement bracket assembly	10 Mins
6. Closing the fenders for both sides	20 Mins
Total	**75 Mins**