Z650
Z650 ABS

Motorcycle
Assembly & Preparation Manual

Kawasaki

Recharge the Battery First!

This motorcycle comes with a pre-filled, pre-charged sealed battery, eliminating the need for dealers to prepare the battery by filling it with electrolyte. However, the battery must be charged upon initial receipt of each unit since it may have been warehoused for a significant time period before being delivered to your dealership.

After the initial charge at your dealership the battery should be recharged every six months. Because the battery will discharge more rapidly at high ambient temperatures, more frequent charging intervals may be required for dealerships located in hot climate zones.

When the battery is not charged periodically during long term storage, its internal resistance increases and could prevent the battery from being recharged. Refer to the "Battery Service" chapter for details.

The battery is located within the crate at the lower indicated with a dotted line. The battery can be removed from the crate for charging by cutting off a portion of the cardboard cover along the dotted line.

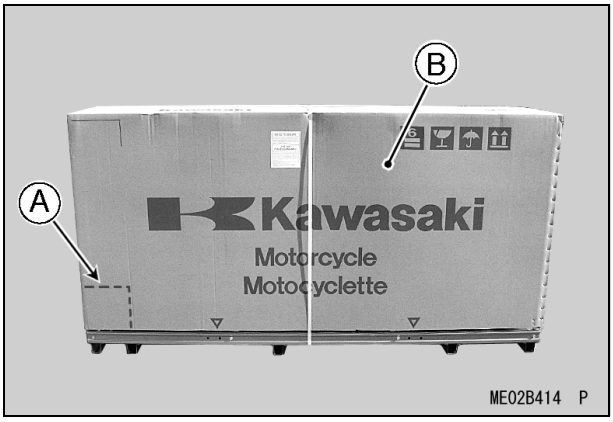

A. Battery Location

B. Cardboard Cover

Foreword

In order to ship Kawasaki vehicles as efficiently as possible, they are partially disassembled before crating. Since some of the most commonly removed parts have a direct bearing on a vehicle's reliability and safety, conscientious pre-sale assembly and preparation becomes extremely important. Good setup procedures can prevent needless warranty claims and give customers a greater sense of confidence in Kawasaki and their Kawasaki Dealers.

This Assembly and Preparation Manual explains step by step procedures of the following items for all Kawasaki Z650 and Z650 ABS.

1. Uncrating
2. Assembly
3. Preparation

The selling dealer assumes sole responsibility for any unauthorized modifications prior to sale. Refer to your Service Binder for any Service Bulletins specifying Factory Directed Modifications (Special Claims) which must be performed before the vehicle is ready for sale.

Whenever you see the following symbols heed their instructions! Always follow safe operating and maintenance practices.

⚠ DANGER

DANGER indicates a hazardous situation which, if not avoided, will result in death or serious injury.

⚠ WARNING

WARNING indicates a hazardous situation which, if not avoided, could result in death or serious injury.

NOTICE

NOTICE is used to address practices not related to personal injury.

NOTE

○*NOTE indicates information that may help or guide you in the operation or service of the vehicle.*

Kawasaki Heavy Industries, Ltd. accepts no liability for any inaccuracies or omissions in this publication, although every possible measure has been taken to make it as complete and accurate as possible. All procedures and specifications subject to change without notice.

© 2016 Kawasaki Heavy Industries, Ltd.

Table of Contents

Uncrating 3
Opening Crate for Pattern A 3
Opening Crate for pattern B 4
Parts Check 6
Assembly 7
Frame Cover 7
Rear View Mirrors 7
French Label (For Canada Model) 7
Brake Disc Cleaning 8
Preparation 8
Battery Service 8
Coolant 12
Front Brake 12
Rear Brake 14
Clutch Lever and Cable 16
Drive Chain 16
Rear Shock Absorber 18
Tire Air Pressures 18
Fuel 18
Engine Oil (4-stroke) 19
Throttle Grip and Cable 20
Rear Brake Light Switch 21
Idle Speed Adjustment 21
Headlight Aim 22
Digital Meter 23
License Plate Mounting Holes 23
Fastener Check 26
Standard Torque Table 28
Test Ride the Motorcycle 28
A & P Check List 28

Uncrating

Opening Crate for Pattern A

⚠ WARNING

Crates have sharp edges and may have nails or screws that can cause cuts and injury. Always wear protective gloves, boots and eye protection when uncrating to prevent injury.

⚠ WARNING

The steel crate panel plates and fasteners have sharp edges. Always wear protective gloves, boots and eye protection when uncrating to prevent injury.

- Clear a space about 6 m (20 ft) square to give yourself plenty of space to work.
- Place the crate upright on its base.
- Remove the cardboard cover.
- Remove the parts boxes.

NOTICE

When removing the crate bracket from the motorcycle, be careful not to drop any parts or the bracket onto the fuel tank and other components, and not to scratch the fuel tank or other components with the crate bracket.

- Take out all the bolts and screws and remove the top and sides of the crate.
- Loosen the front axle holding nut.
- Remove the left front support bracket bolt and discard it.
- Remove the front axle holding nut, left front support bracket and rubber washer and discard them.

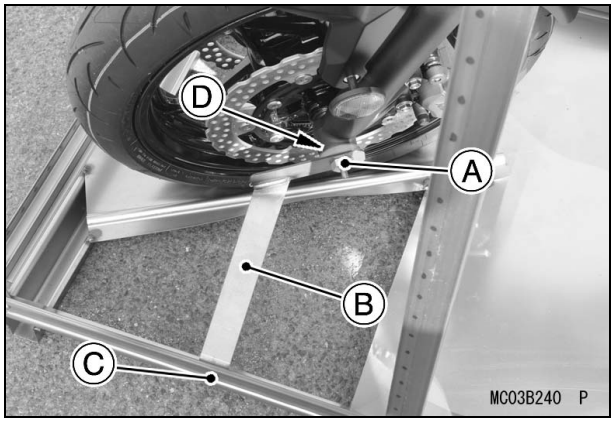

A. Front Axle Holding Nut
B. Left Front Support Bracket
C. Left Front Support Bracket Bolt
D. Rubber Washer

- Remove the right front support bracket bolt and discard it.
- Remove the front axle holding bolt, right front support bracket and rubber washer and discard them.

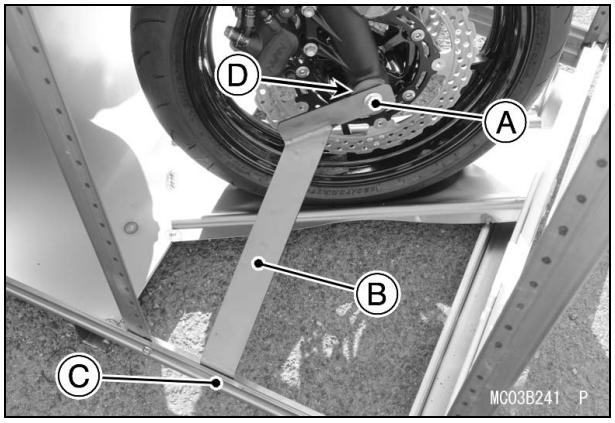

A. Front Axle Holding Bolt
B. Right Front Support Bracket
C. Right Front Support Bracket Bolt
D. Rubber Washer

- Remove the lower support bracket bolt on the left and right sides and discard them.
- Lift the vehicle upward about 10 cm (4 in.).
- Remove the lower support brackets and rubber washers on the left and right sides.
- Roll the vehicle off the crate base.

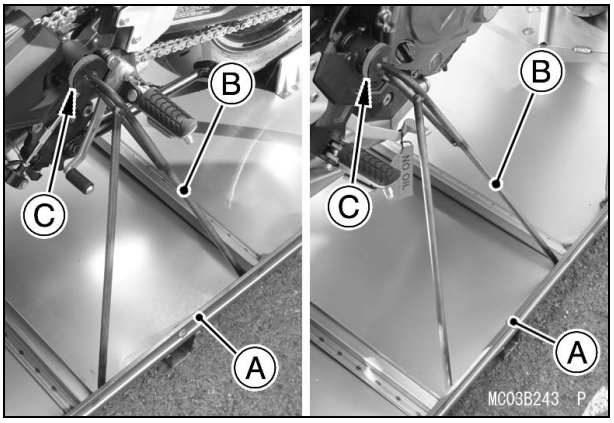

A. Lower Support Bracket Bolts

B. Lower Support Brackets

C. Rubber Washer

NOTICE
When rolling the vehicle off the crate base, sharp edges on the crate can cut or damage tires. **Cover sharp edges with waste cloth for tire protection as necessary.**

Opening Crate for pattern B

⚠ WARNING
Crates have sharp edges and may have nails or screws that can cause cuts and injury. Always wear protective gloves, boots and eye protection when uncrating to prevent injury.

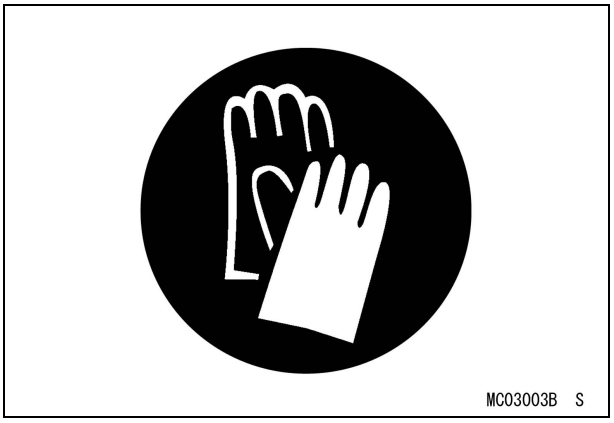

⚠ WARNING
The steel crate panel plates and fasteners have sharp edges. Always wear protective gloves, boots and eye protection when uncrating to prevent injury.

- Clear a space about 6 m (20 ft) square to give yourself plenty of space to work.
- Place the crate upright on its base.
- Remove the cardboard cover.
- Remove the parts boxes.

NOTICE
When removing the crate bracket from the motorcycle, be careful not to drop any parts or the bracket onto the fuel tank and other components, and not to scratch the fuel tank or other components with the crate bracket.

- Take out all the bolts and screws and remove the top and sides of the crate.
- Loosen the front axle holding nut.
- Remove the left front support bracket bolt and discard it.
- Remove the front axle holding nut, left front support bracket and rubber washer and discard them.

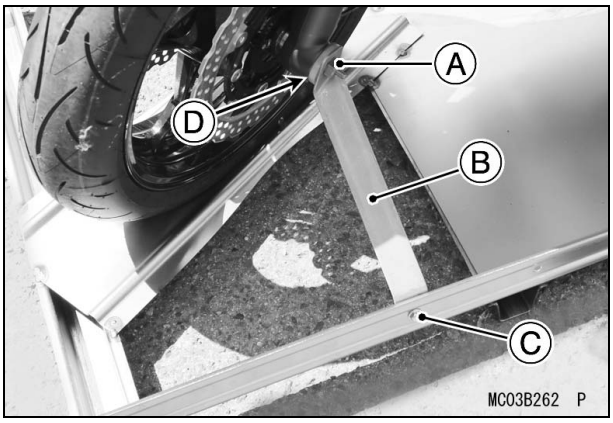

A. Front Axle Holding Nut

B. Left Front Support Bracket

C. Left Front Support Bracket Bolt

D. Rubber Washer

- Remove the right front support bracket bolt and discard it.
- Remove the front axle holding bolt, right front support bracket and rubber washer and discard them.

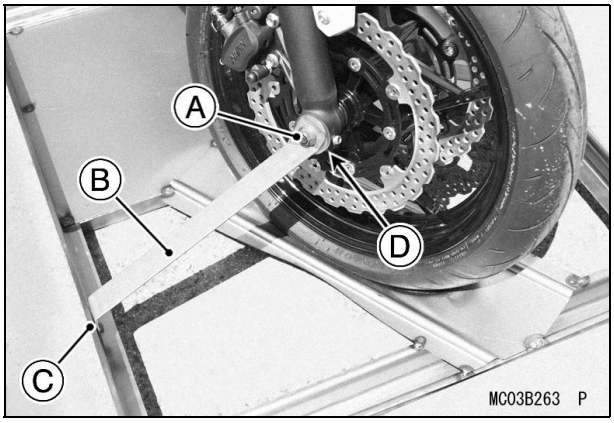

A. Front Axle Holding Bolt
B. Right Front Support Bracket
C. Right Front Support Bracket Bolt
D. Rubber Washer

- Loosen the pivot holding nuts.
- Remove the lower support bracket bolts on the left and right sides and discard them.
- Lift the vehicle upward about 10 cm (4 in.).
- Remove the pivot holding nuts, pivot holding bolt, lower support brackets and rubber washers.
- Roll the vehicle off the crate base.

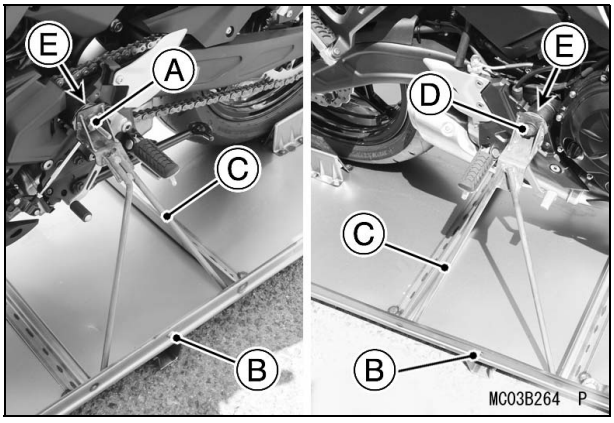

A. Pivot Holding Nuts
B. Lower Support Bracket Bolts
C. Lower Support Brackets
D. Pivot Holding Bolt
E. Rubber Washers

NOTICE
When rolling the vehicle off the crate base, sharp edges on the crate can cut or damage tires. **Cover sharp edges with waste cloth for tire protection as necessary.**

Parts Check

- Open the parts box, and check the parts against the illustrations. There may be minor differences between these illustrations and the actual vehicle parts. In the following charts under Remarks, D = diameter in millimeters, and L = length in millimeters.

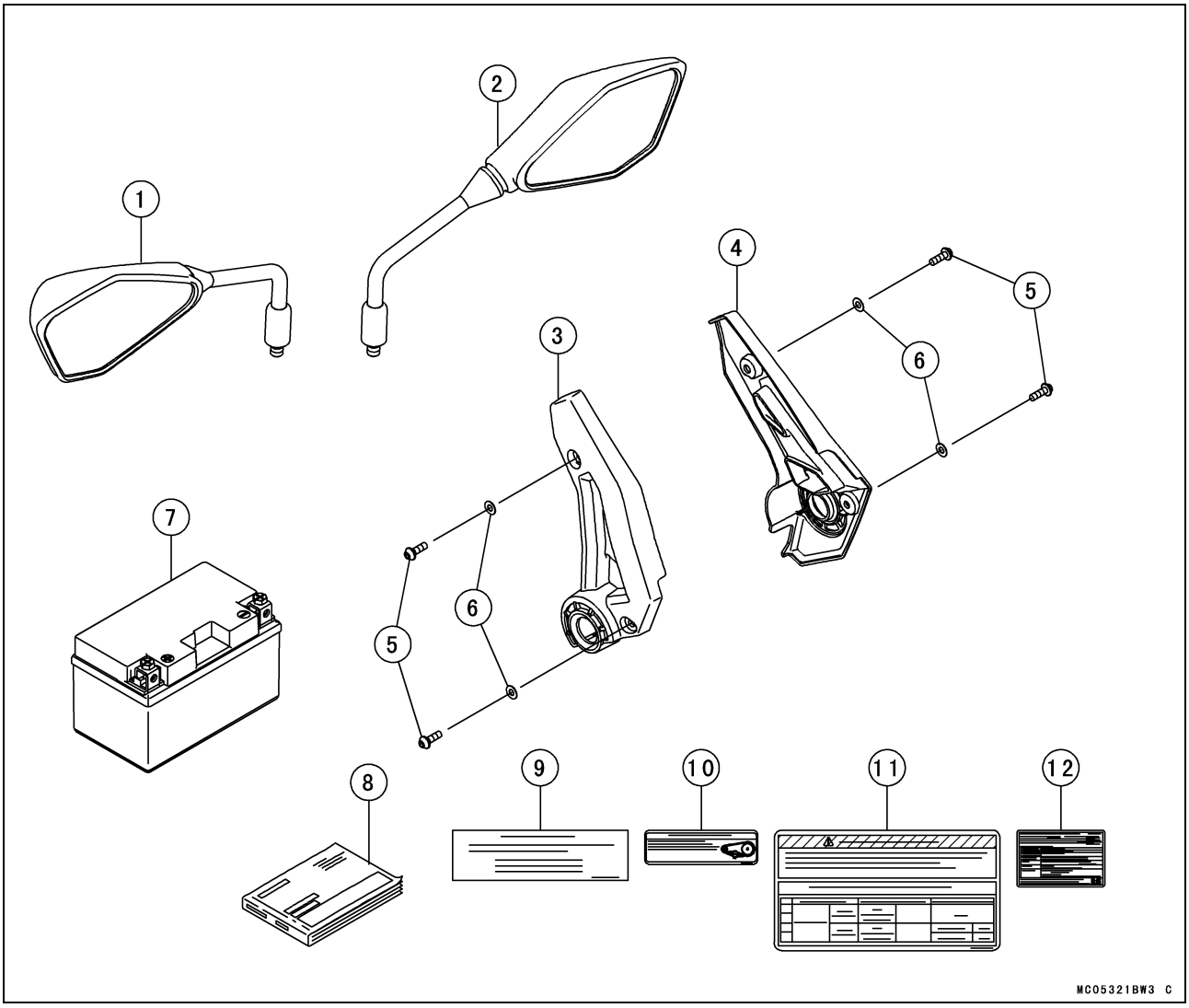

No.	Part Name	Qty	Remarks
1	Left Rear View Mirror	1	
2	Right Rear View Mirror	1	
3	Left Frame Cover	1	
4	Right Frame Cover	1	
5	Socket Bolt	4	D = 5, L = 16
6	Washer	4	D = 5.3
7	Battery YTZ10	1	12 V 8.6 Ah
8	Owner's Manual	1	
	(French Label for Canada Model only)		
9	French Table	1	
10	Important Drive Chain Information	1	
11	Tire and Load Data	1	
12	Vehicle Emission Control Information	1	

Assembly

Frame Cover

- Install the left frame cover, and tighten its bolts (D = 5, L = 16) together with the washers (D = 5.3).

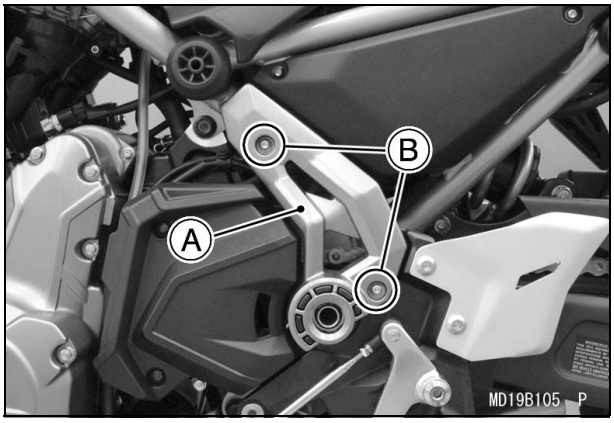

A. Left Frame Cover

B. Bolts (D = 5, L = 16) and Washers (D = 5.3)

- Install the right frame cover in the same manner as the left frame cover.

Rear View Mirrors

- Slide up the rubber boot.
- Screw the lower end of the left rear view mirror into the holder all the way, and tighten the rear view mirror nut (lower).
- Turn the stay to assure visibility to the rear with the operator sitting on the motorcycle by loosening the rear view mirror locknut (upper) (left-hand thread) clockwise.
- Hold the nut (lower) and tighten the locknut (upper).

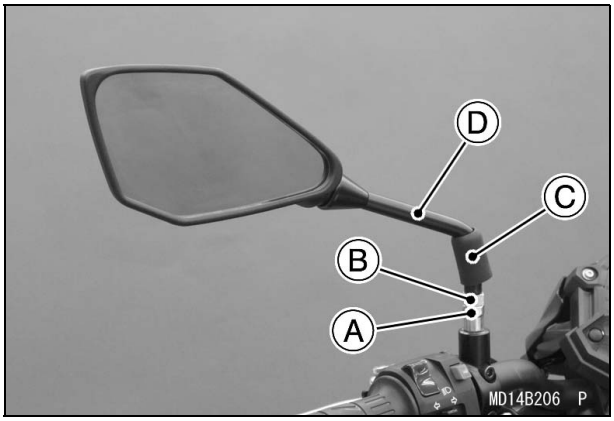

A. Nut (Lower)

B. Locknut (Upper)

C. Rubber Boot

D. Stay

- Reinstall the rubber boot.
- Adjust the rear view mirror by slightly moving only the mirror portion of the assembly.

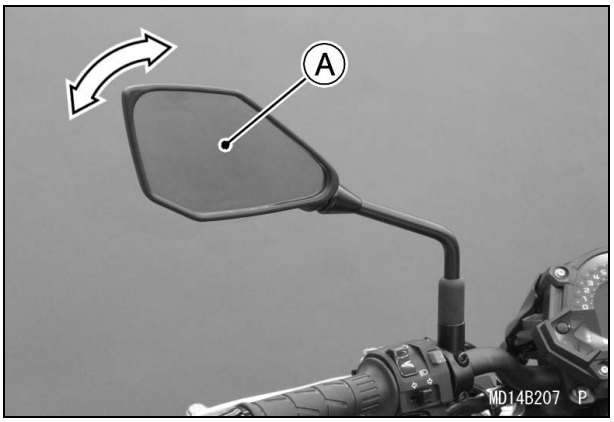

A. Mirror

- Installation and adjustment of the right side mirror is common with the left side. Follow the procedure specified for the left side.

French Label (For Canada Model)

When required, apply French label in the parts bag over English label on the vehicle.

- Wipe off any oil or grease from English label. Refer to the following figure for the label location.
- Peel the label in the parts bag off the backing sheet and apply it over English label.

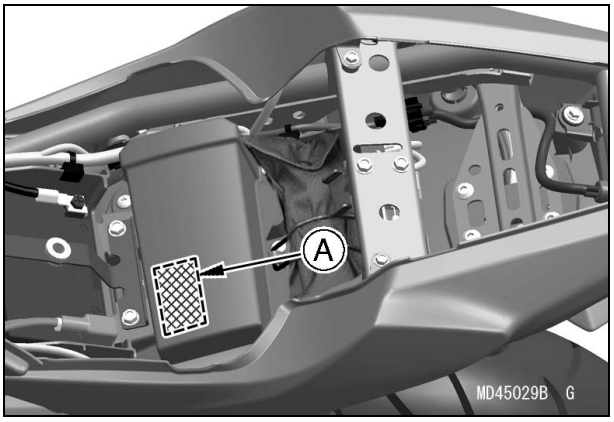

A. Vehicle Emission Control Information

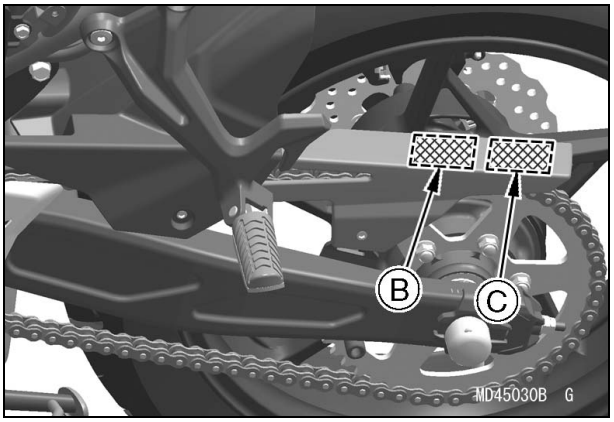

B. Important Drive Chain Information

C. Tire and Load Data

Brake Disc Cleaning

- Clean the front and rear brake discs using oilless solvent.

⚠ WARNING

An anticorrosive treatment applied to the brake discs will increase braking distance and can cause an accident resulting in serious injury or death. Remove the anticorrosive treatment using an oilless solvent.

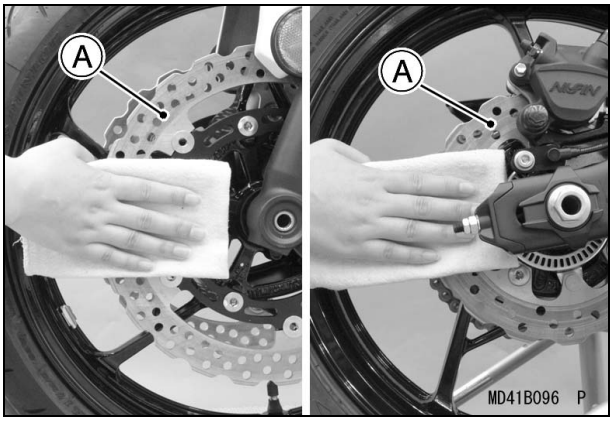

A. Brake Disc

Preparation

Battery Service

Battery Activation

Charged Battery Service

This motorcycle comes with a pre-filled, pre-charged sealed battery, eliminating the need for dealers to prepare the battery by filling it with electrolyte. However, the battery must be charged upon initial receipt of each unit since it may have been warehoused for a significant time period before being delivered to your dealership.

After the initial charge at your dealership the battery should be recharged every six months. Because the battery will discharge more rapidly at high ambient temperatures, more frequent charging intervals may be required for dealerships located in hot climate zones.

NOTICE

This battery is a pre-filled, pre-charged sealed battery. It is not necessary to fill the battery with electrolyte. Do not try to remove the strip of caps.

Battery Recharging

⚠ DANGER

Batteries produce an explosive gas mixture of hydrogen and oxygen that can cause serious injury and burns if ignited. Keep the battery away from sparks and open flames during charging. When using a battery charger, connect the battery to the charger before turning on the charger. This procedure prevents sparks at the battery terminals which could ignite any battery gases.

NOTICE

Always remove the battery from the vehicle for charging. If the battery is charged while still installed, battery electrolyte may spill and corrode the frame or other parts of the motorcycle.
Charging the battery at a rate higher than specified may ruin the battery. Charging at a high rate causes excess heat which can warp the plates and cause internal shorting.
Higher-than-normal charging rates also cause the plates to shed active material. Deposits will accumulate, and can cause internal shorting.
If the temperature of the electrolyte rises above 45°C (113°F) during charging, reduce the charging rate to lower the temperature, and increase charging time proportionately.

NOTE

○*Never attempt to charge a frozen battery.*
○*Allow it to warm up to room temperature before charging.*
○*Never leave a battery on a trickle charger longer than 48 hours. Serious damage to the battery will occur.*
○*Always install the red insulating cap to the battery positive (+) terminal while the battery is stored.*

- Remove the charging label, tape, terminal bolts, terminal nuts and cap.

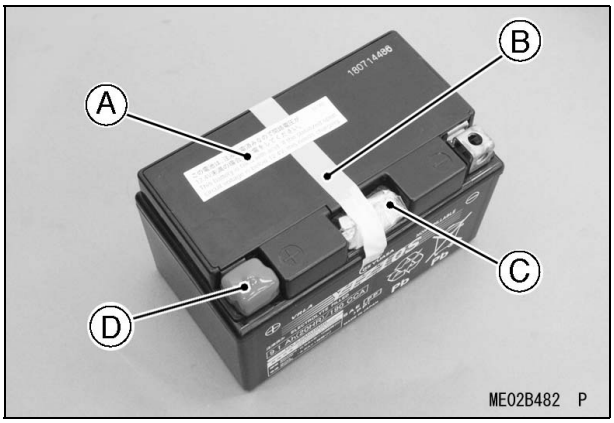

A. Charging Label
B. Tape
C. Terminal Bolts and Nuts
D. Cap

- Charge the battery with the standard charging rates indicated on the battery.

Battery types	YTZ10S
Standard Charge	0.9 A × 5 ~ 10 hours

- Use a recommended battery charger, following the manufacturer's instructions.

Kawasaki-recommended chargers:

Battery Mate 150-9
OptiMate PRO 4-S/PRO S/PRO 2
Yuasa MB-2040/2060
Christie C10122S

- If the recommended chargers are not available, use equivalent one.

NOTE

○*Charging rates will vary depending on how long the battery has been stored, temperature, and the type of charger used.*

- Determine battery condition after charging.

NOTE

○*Determine the condition of the battery 30 minutes after completion of the charge by measuring the terminal voltage according to the table below.*

Criteria	Judgement
12.8 V or higher	Good
12.0 ~ 12.8 V	Charge insufficient → Recharge
12.0 V or lower	Unserviceable → Replace

NOTE

○*If it is less than 12.8 volts, repeat charging cycle.*
○*If the minimum voltage specification cannot be reached after three consecutive charging attempts, the battery should be replaced.*

- After recharging, record the charging date and the name of person in charge of this job to the label attached on the battery.

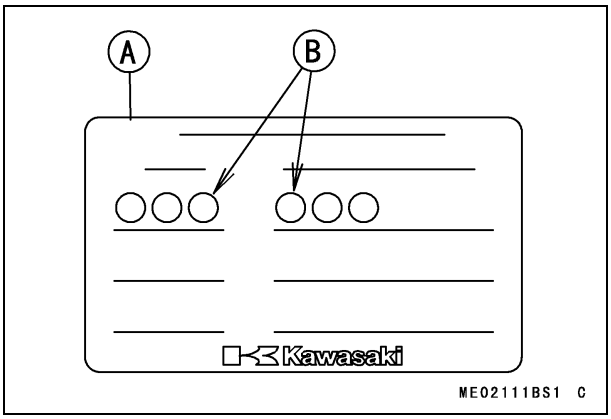

A. Recharging Record Label
B. Record the Charging Date and the Name of Person Here.

○The battery recharging record label is attached on the battery side as shown.

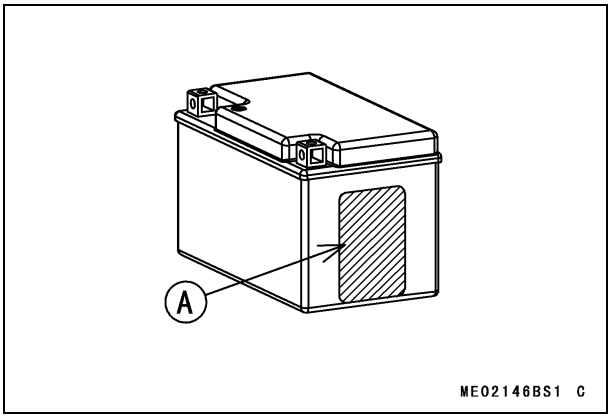

A. Battery Recharging Record Label

○The battery manufacturing date is printed on battery top.

Example)	01	09	10	XX
	Day	Month	Year	Mfg. location

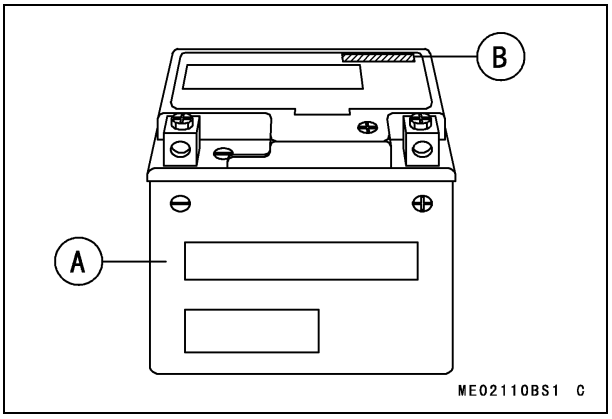

A. Battery

B. Manufacturing Date

Battery Installation

- Inspect the battery voltage using a voltmeter, and recharge the battery if the voltage reading is below 12.8 volts just before delivering to your customer to ensure the maximum performance and customer satisfaction. (Refer to the "Battery Recharging" section.)
- Wipe off any dirt of the battery.
- Turn the ignition switch off.
- Insert the ignition key into the seat lock.
- Lift the front part of the passenger's seat upward while turning the key clockwise.
- Remove the passenger's seat forward.

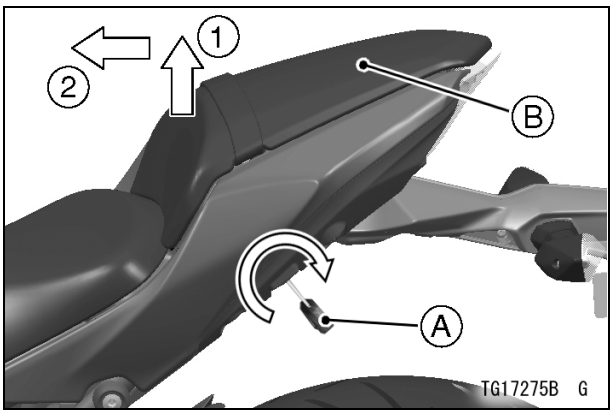

A. Ignition Key

B. Passenger's Seat

- Lift the rear part of the rider's seat upward, and remove the rider's seat rearward.

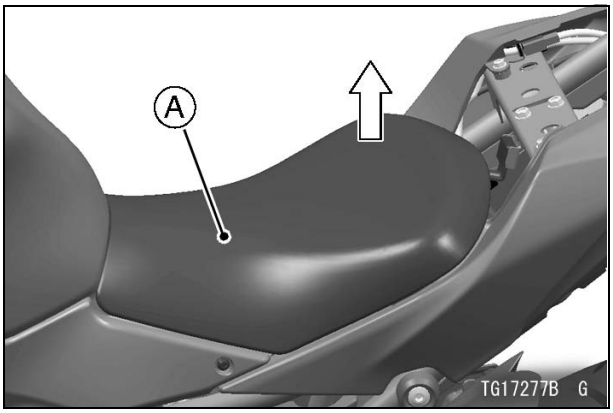

A. Rider's Seat

- Remove the bolts and clamps.
- Remove the bracket.

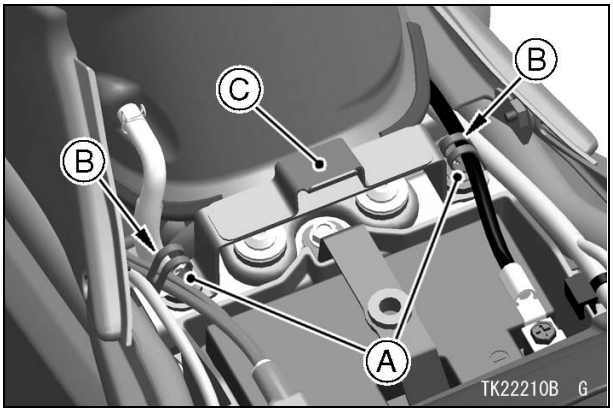

A. Bolts

B. Clamps

C. Bracket

- Remove the bolts.
- Remove the holder.

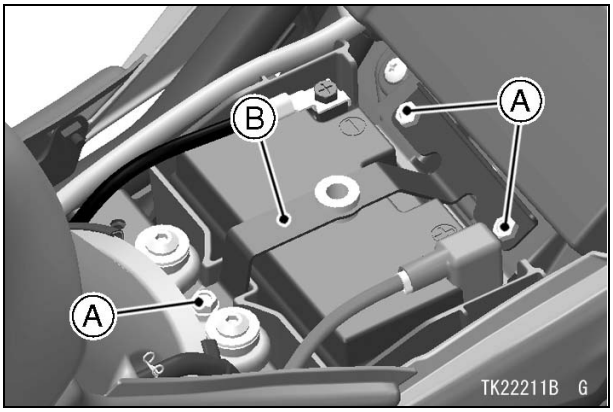

A. Bolts

B. Holder

- Place the battery in the battery case.
- Connect the positive (+) cable to the (+) terminal first.
- Then connect the negative (–) cable to the (–) terminal.
- Put a light coat of grease on the terminals to prevent corrosion.
- Cover the (+) terminal with the red cap.

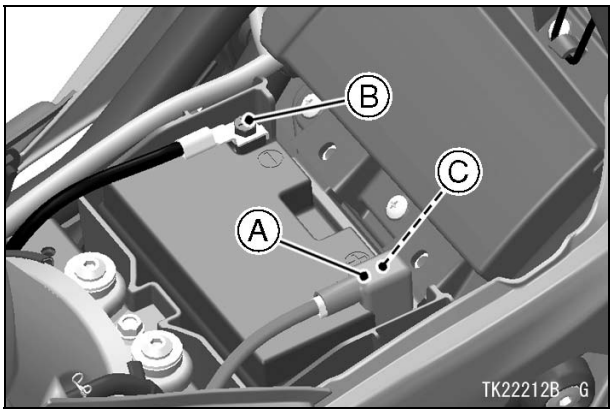

A. Red Cap
B. (–) Terminal
C. (+) Terminal

- Install the holder.
- Install the bolts.

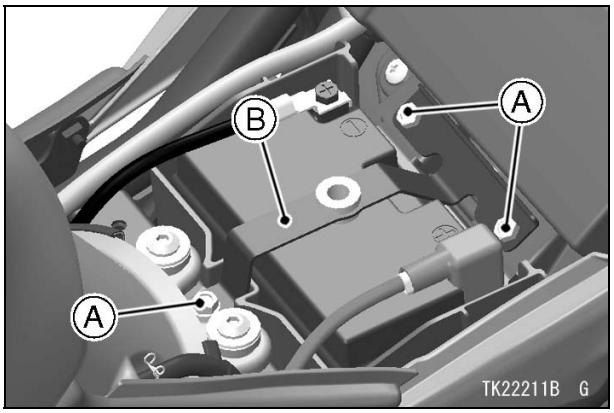

A. Bolts
B. Holder

- Install the bracket.
- Install the bolts and clamps.

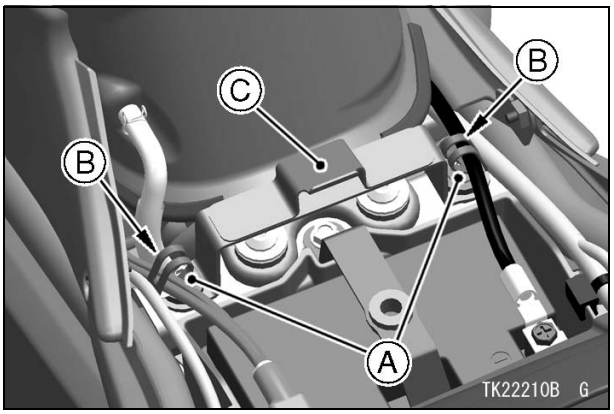

A. Bolts
B. Clamps
C. Bracket

NOTE

○*Install the clamps sideways so that the clamps are parallel to the bracket.*
○*Bend the clamps and hold the battery cables with them to prevent the cable from interfering with the edges of other parts.*

- Insert the hook at the front of the rider's seat into the slot of the bracket.
- Fit the tab at the rear of the rider's seat on the guide of the frame.

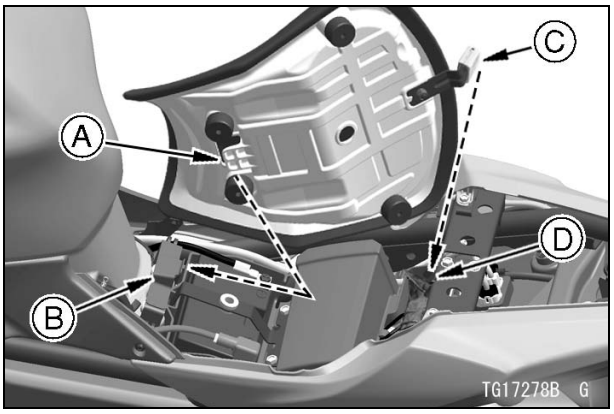

A. Hook
B. Slot
C. Tab
D. Guide

- Insert the hook at the rear of the passenger's seat into the slot of the frame.
- Insert the latch plate at the front of the passenger's seat into the latch hole of the frame.
- Push down the front part of the passenger's seat until the lock clicks.

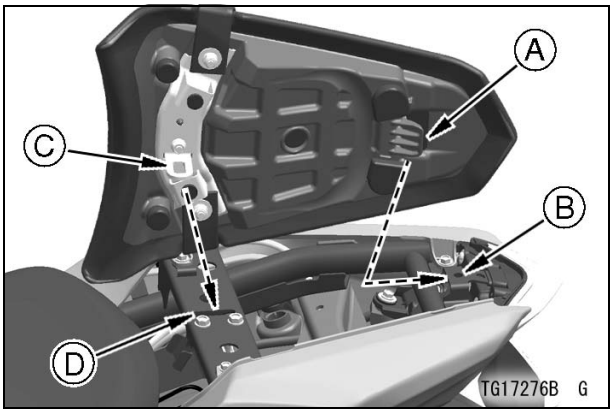

A. Hook
B. Slot
C. Latch Plate
D. Latch Hole

- Pull up the front and rear ends of the passenger's seat to make sure they are securely locked.

Coolant

Coolant Level Inspection

- Position the motorcycle so that it is perpendicular to the ground.
- Check the coolant level through the coolant level gauge on the reserve tank located in right side cover. The coolant level should be between the F (Full) and L (Low) level lines.

NOTE

○*Check the level when the engine is cold (room or atmospheric temperature).*

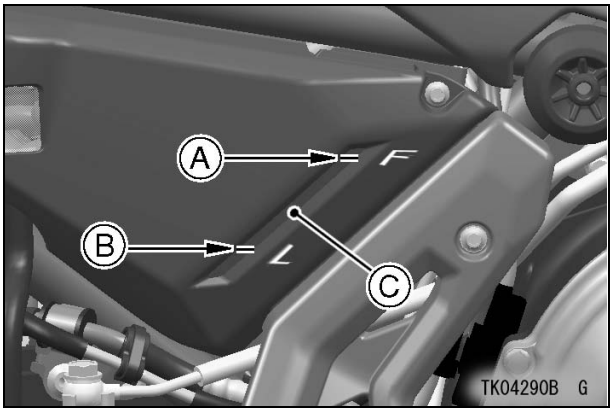

A. F (Full) Level Line
B. L (Low) Level Line
C. Reserve Tank

- If the amount of coolant is insufficient, add coolant into the reserve tank.

Coolant filling

- Remove the bolts and washer.
- Remove the right side cover.

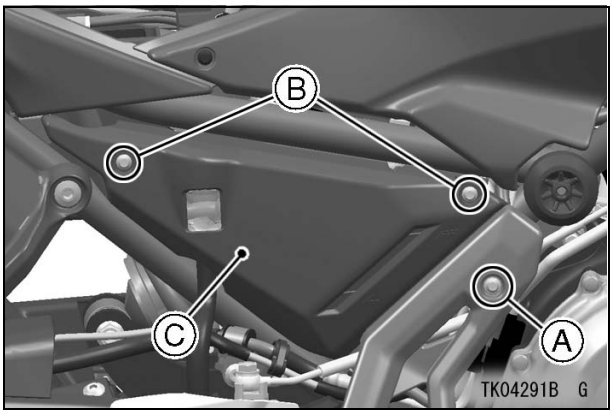

A. Bolt and Washer
B. Bolts
C. Right Side Cover

- Remove the reserve tank cap from the reserve tank and add coolant through the filler opening to the F (Full) level line.

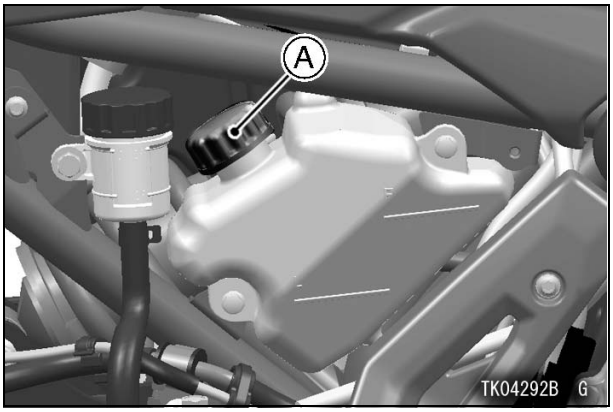

A. Reserve Tank Cap

NOTE

○*A permanent type of antifreeze is installed in the cooling system when shipped. It is mixed at 50% and has the freezing point of –35°C (–31°F).*

- Install the reserve tank cap.
- Install the right side cover, and tighten its bolts together with the washer.

Front Brake

Front Brake Fluid Level Inspection

- With the front brake fluid reservoir held horizontal, check that the fluid level must be above the lower level line.

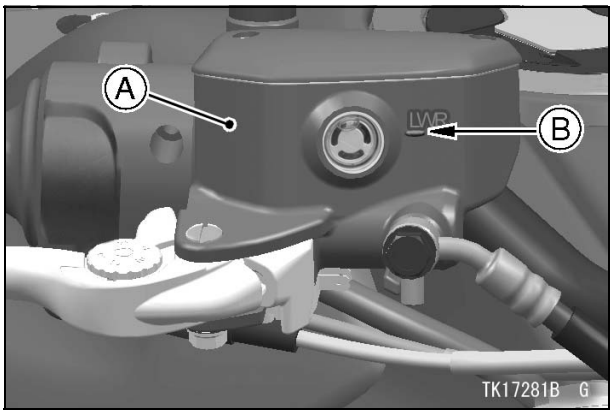

A. Front Brake Fluid Reservoir

B. Lower Level Line

- If the fluid level in the reservoir is lower than the lower level line, check for fluid leaks in the front brake lines and fill the reservoir.
- Loosen the reservoir cap screws to remove the front brake fluid reservoir cap and diaphragm.
- Fill the reservoir to the upper level line with DOT4 brake fluid, reinstall the diaphragm and reservoir cap.

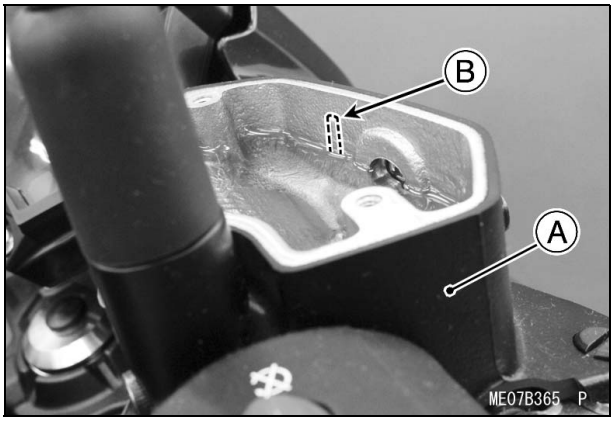

A. Front Brake Fluid Reservoir

B. Upper Level Line

- Tighten the reservoir cap screws to the specified torque.

Torque: 1.5 N·m (0.15 kgf·m, 13 in·lb)

⚠ WARNING

When working with the disc brake, observe the precautions listed below.

- **Never reuse old brake fluid.**
- **Do not use fluid from a container that has been left unsealed or that has been open for a long time.**
- **Do not mix two types and brands of fluid for use in the brake. This lowers the brake fluid boiling point and could cause the brake to be ineffective. It may also cause the rubber brake parts to deteriorate.**
- **Do not leave the reservoir cap off for any length of time to avoid moisture contamination of the fluid.**
- **Do not change the fluid in the rain or when a strong wind is blowing.**
- **Brake fluid quickly damages painted surfaces; any spilled fluid should be completely wiped up immediately.**
- **If any of the brake line fittings or the bleed valve is opened at any time, the AIR MUST BE BLED FROM THE BRAKE LINE.**

- Operate the brake lever several times.
- If it feels spongy, there might be air in the brake line.
- If necessary, bleed the air in the front brake line.
- Also check for fluid leakage around the fittings.

Brake Line Air Bleeding

- Loosen the reservoir cap screws to remove the front brake fluid reservoir cap and diaphragm, and check that there is plenty of fluid in the reservoir.

NOTICE

Brake fluid quickly damages painted plastic surfaces; any spilled fluid should be completely washed away immediately.

NOTE

○ *The fluid level must be checked several times, during the bleeding operation and replenished as necessary. If the fluid in the reservoir runs completely out any time during bleeding, the bleeding operation must be repeated from the beginning since air will have entered the line.*

○ *First bleeding the right caliper then below steps for the left caliper.*

- Attach a clear plastic hose to the bleed valve on the front master cylinder and run the other end of the hose into a container.
- With the reservoir cap off, slowly pump the brake lever several times until no air bubbles can be seen rising up through the fluid from the holes at the bottom of the reservoir. This bleeds the air from the brake master cylinder end of the line.
- Pump the brake lever a few times until it becomes hard and then, holding the lever squeezed, quickly open (turn counterclockwise) and close the bleed valve. Then release the lever. Repeat this operation until no more air can be seen coming out into the plastic hose.

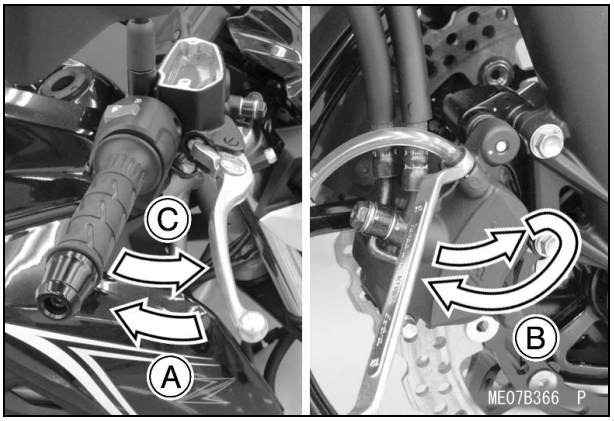

A. Hold the brake lever applied.
B. Quickly open and close the bleed valve on the front brake caliper.
C. Release the brake lever.

- Repeat the previous step one more time for the other front disc brake.
- When air bleeding is finished, check that the fluid level is between the upper and lower level lines.
- Tighten the bleed valve(s) to the specified torque.

Torque: 7.8 N·m (0.80 kgf·m, 69 in·lb)

- Reinstall the diaphragm and reservoir cap.
- Tighten the reservoir cap screws to the specified torque.

Torque: 1.5 N·m (0.15 kgf·m, 13 in·lb)

- Apply the brake forcefully for a few seconds, and check for fluid leakage around the fittings.

Rear Brake

Rear Brake Fluid Level Inspection

- With the rear brake fluid reservoir held horizontal, check that the fluid level is between the upper and lower level lines.

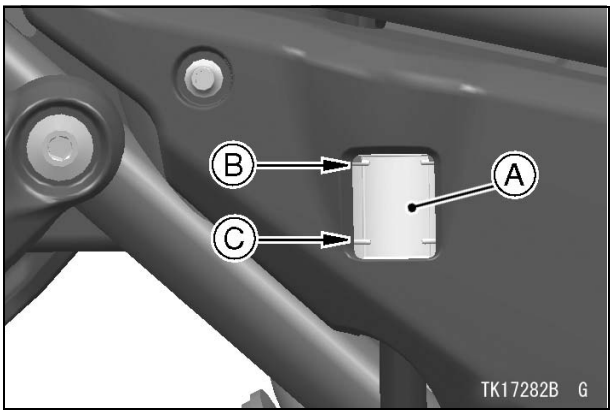

A. Rear Brake Fluid Reservoir
B. Upper Level Line
C. Lower Level Line

- If the fluid level in the reservoir is lower than the lower level line, check for fluid leaks in the brake line, and fill the reservoir.
- Remove the bolts and washer.
- Remove the right side cover.

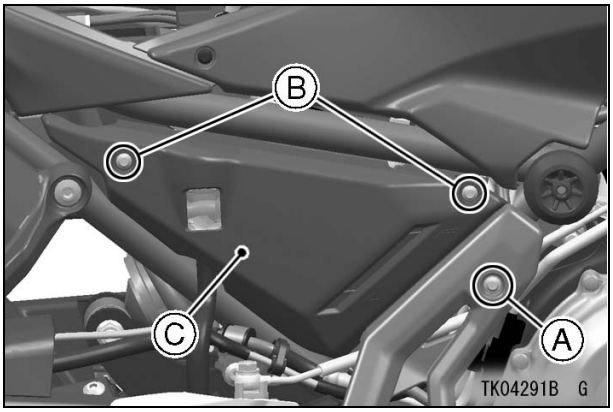

A. Bolt and Washer
B. Bolts
C. Right Side Cover

- Remove the reservoir cap and diaphragm.
- Fill the reservoir to the upper level line with DOT4 brake fluid, reinstall the diaphragm and reservoir cap.

NOTICE

Brake fluid quickly damages painted plastic surfaces; any spilled fluid should be completely washed away immediately.

NOTE

○*First, tighten the rear brake fluid reservoir cap clockwise by hand until slight resistance is felt indicating that the cap is seated on the reservoir body, then tighten the cap an additional 1/6 turn while holding the brake fluid reservoir body.*

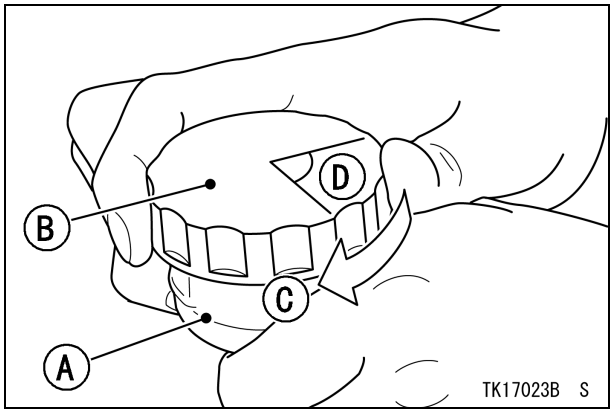

A. Rear Brake Fluid Reservoir

B. Reservoir Cap

C. Clockwise

D. 1/6 turn

- Operate the brake pedal several times.
- If it feels spongy, there might be air in the brake line.
- If necessary, bleed the air in the rear brake line.
- Also check for fluid leakage around the fittings.

Brake Line Air Bleeding

- Remove the rear brake reservoir cap and diaphragm, and check that there is plenty of fluid in the reservoir.

NOTICE
Brake fluid quickly damages painted plastic surfaces; any spilled fluid should be completely washed away immediately.

NOTE

○ *The fluid level must be checked several times, during the bleeding operation and replenished as necessary. If the fluid in the reservoir runs completely out any time during bleeding, the bleeding operation must be repeated from the beginning since air will have entered the line.*

- Attach a clear plastic hose to the bleed valve on the rear brake caliper and run the other end of the hose into a container.
- With the reservoir cap off, slowly pump the brake pedal several times until no air bubbles can be seen rising up through the fluid from the holes at the bottom of the reservoir. This bleeds the air from the rear brake master cylinder end of the line.
- Pump the brake pedal a few times until it becomes hard and then, holding the pedal pushed down, quickly open (turn counterclockwise) and close the bleed valve. Then release the pedal. Repeat this operation until no more air can be seen coming out into the plastic hose.

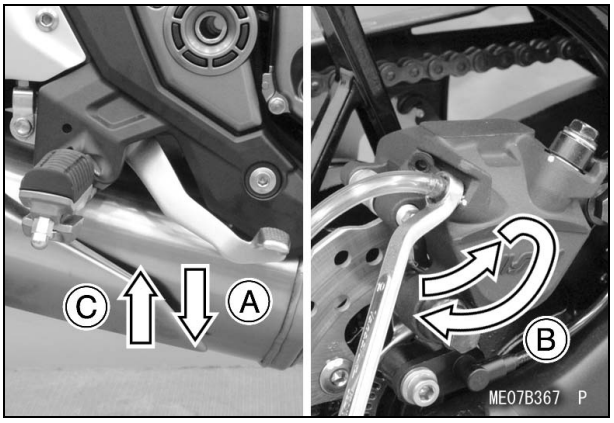

A. Hold the brake pedal applied.

B. Quickly open and close the bleed valve on the rear brake caliper.

C. Release the brake pedal.

- When air bleeding is finished, check that the fluid level is between the upper and lower level lines.
- Tighten the bleed valve to the specified torque.

Torque: 7.8 N·m (0.80 kgf·m, 69 in·lb)

- Reinstall the diaphragm and reservoir cap.

NOTE

○ *First, tighten the rear brake fluid reservoir cap clockwise by hand until slight resistance is felt indicating that the cap is seated on the reservoir body, then tighten the cap an additional 1/6 turn while holding the brake fluid reservoir body.*

- Apply the brake forcefully for a few seconds, and check for fluid leakage around the fittings.
- Install the right side cover and tighten its bolts together with the washer.

Clutch Lever and Cable

Clutch Lever Free Play Inspection

- Check that the clutch lever has the specified amount of free play as shown.

Clutch Lever Free Play:

2 ~ 3 mm (0.08 ~ 0.12 in.)

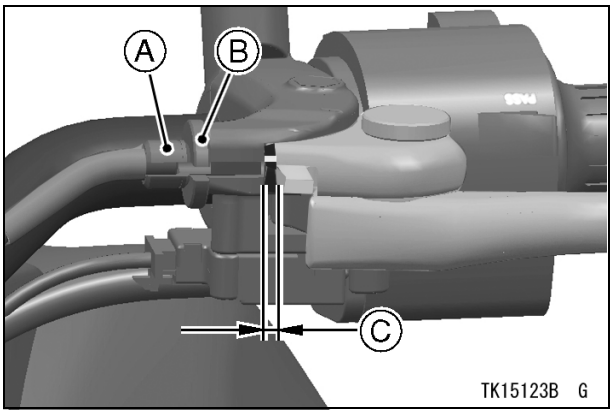

A. Adjuster

B. Locknut

C. Clutch Lever Free Play

- If the free play is incorrect, adjust the free play.

Clutch Lever Free Play Adjustment

- Turn the adjuster so that the clutch lever will have 2 ~ 3 mm (0.08 ~ 0.12 in.) of free play.
- If it cannot be done, use the adjusting nuts at the lower end of the clutch cable.

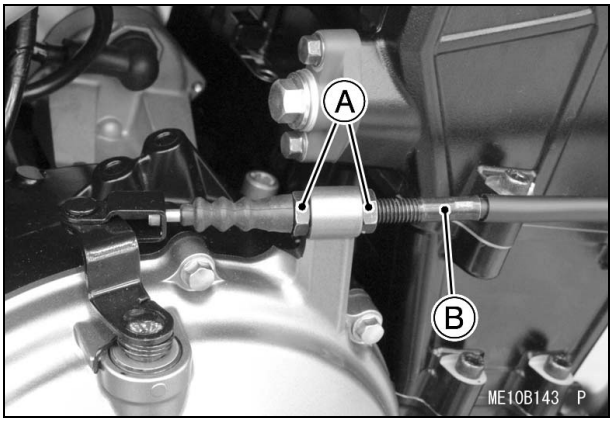

A. Adjusting Nuts

B. Clutch Cable

NOTE

○*After the adjustment is made, start the engine and check that the clutch does not slip and that it releases properly.*

○*For minor corrections, use the adjuster at the clutch lever.*

Drive Chain

Drive Chain Slack Inspection

- Set the motorcycle up on its side stand.
- Make sure that the drive chain has the specified amount of play, and that the left and right notches are on the same marks or points on the left and right of the swingarm.

⚠ WARNING

Misalignment of the wheel will result in abnormal tire wear and can cause an unsafe riding condition. Be sure the wheel is properly aligned.

- Rotate the rear wheel to find the position where the chain is tightest, and measure the maximum chain slack by pulling up and pushing down the chain midway between the engine sprocket and rear wheel sprocket.

Drive Chain Slack:

20 ~ 30 mm (0.8 ~ 1.2 in.)

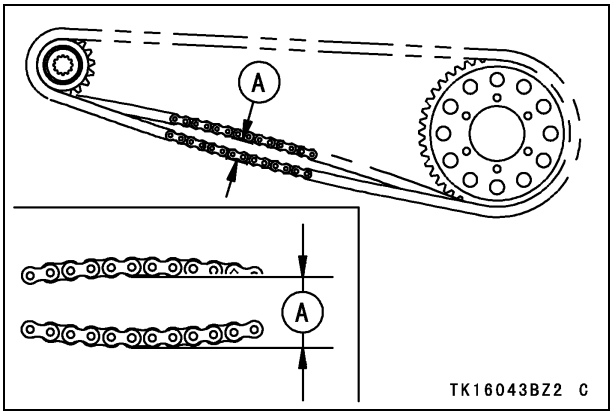

A. 20 ~ 30 mm (0.8 ~ 1.2 in.)

- If the drive chain is too tight or too loose, adjust it so that the chain slack will be within the standard value.

⚠ WARNING

A chain that breaks or jumps off the sprockets could snag on the engine sprocket or lock the rear wheel, severely damaging the motorcycle and causing it to go out of control. Inspect the chain for damage and proper adjustment.

Drive Chain Slack Adjustment

- Remove the cap from the rear axle nut.
- Loosen the left and right chain adjuster locknuts.
- Remove the cotter pin, and loosen the rear axle nut.

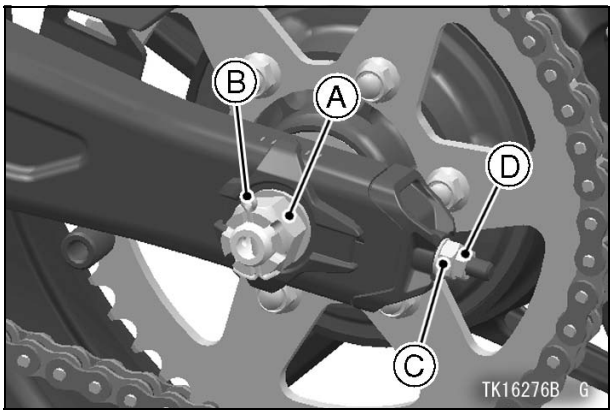

A. Rear Axle Nut
B. Cotter Pin
C. Chain Adjuster
D. Chain Adjuster Locknut

- If the chain is too loose, turn in the left and right chain adjusters evenly.
- If the chain is too tight, turn out the left and right chain adjusters evenly.
- Turn both chain adjusters evenly until the drive chain has the correct amount of slack. To keep the chain and wheel properly aligned, the wheel alignment indicator should align with the same marks on each side of the swingarm.

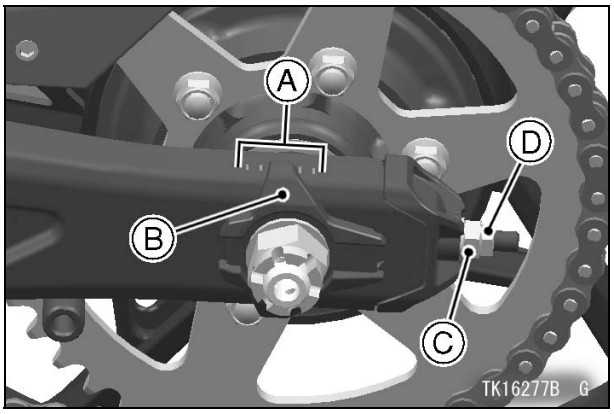

A. Marks
B. Wheel Alignment Indicator
C. Chain Adjuster
D. Chain Adjuster Locknut

NOTE

○*Wheel alignment can also be checked using the straightedge or string method.*

- Tighten both chain adjuster locknuts.
- Tighten the rear axle nut to the specified torque.

Torque: 108 N·m (11.0 kgf·m, 79.7 ft·lb)

- Rotate the wheel, measure the chain slack again at the tightest position, and readjust if necessary.
- Install a new cotter pin.

NOTE

○*When inserting the cotter pin, if the slots in the nut do not align with the cotter pin hole in the axle, tighten the nut clockwise up to the next alignment.*
○*It should be within 30 degrees.*
○*Loosen once and tighten again when the slot goes past the nearest hole.*

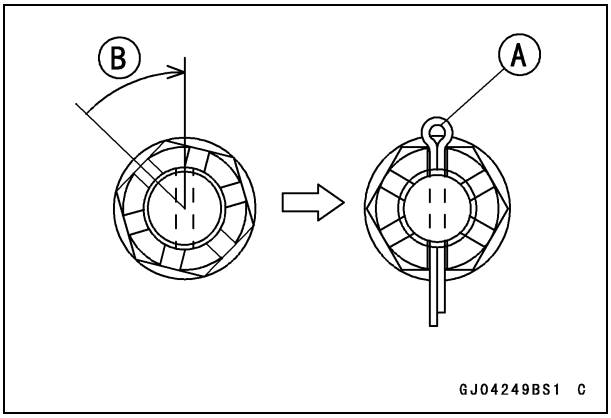

A. Cotter Pin
B. Turning Clockwise

- Bend the cotter pin over the nut.

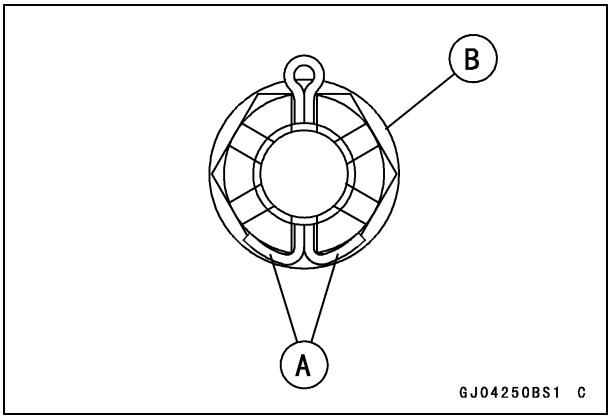

A. Cotter Pin
B. Nut

⚠ WARNING

A loose axle nut can lead to an accident resulting in serious injury or death. Tighten the axle nut to the proper torque and be sure the cotter pin is installed correctly.

- Check the rear brake effectiveness.

Rear Shock Absorber

Spring Preload Inspection

- Remove the bolts and washers.
- Remove the left frame cover.
- Remove the bolts.
- Remove the left side cover.

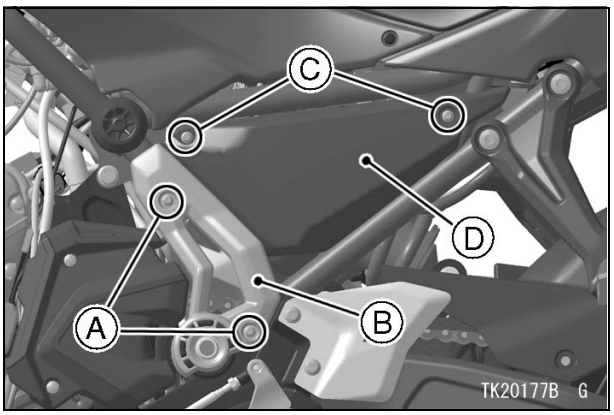

A. Bolts and Washers
B. Left Frame Cover
C. Bolts
D. Left Side Cover

- Check the position of the spring preload adjuster on the rear shock absorber.

STD Spring Preload: No.3 position

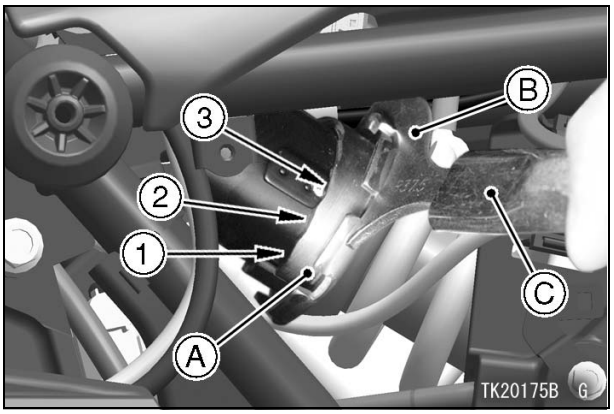

A. Spring Preload Adjuster
B. Wrench
C. Handle

- Turn the preload adjuster to the No.3 position with the wrench in tool kit.
- Install the left frame cover, and tighten its bolts together with the washers.
- Install the left side cover, and tighten its bolts.

Tire Air Pressures

- To prevent flat-spotting during shipment, the tires are over-inflated before crating. Adjust the pressures to the specified values in the front and rear, and make sure to tighten the caps securely.

Tire Air Pressure [when cold]:

Front:	**225 kPa (2.25 kgf/cm², 32 psi)**
Rear:	**250 kPa (2.50 kgf/cm², 36 psi)**

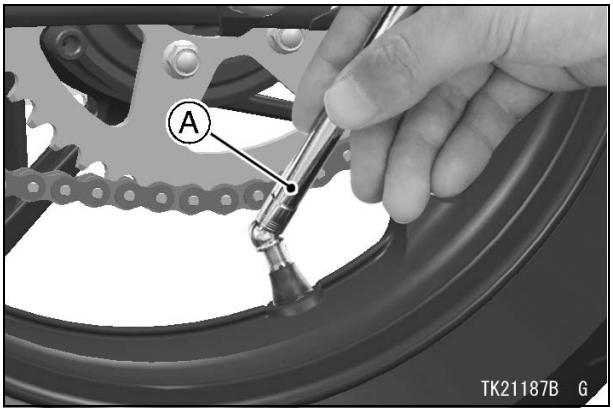

A. Tire Air Pressure Gauge

Fuel

⚠ WARNING

Gasoline is extremely flammable and can be explosive under certain conditions, creating the potential for serious burns. When filling the tank, turn the ignition switch off. Do not smoke. Make sure the area is well ventilated and free from any source of flame or sparks; this includes any appliance with a pilot light.

- Open the fuel tank cap, and check for debris in the fuel tank.
- Fill the fuel tank with one gallon or four liters of unleaded gasoline. Use a gasoline with a minimum octane rating shown below.

For US, Canada and California Specifications

Fuel Type	Unleaded Gasoline	
Minimum Octane Rating	Antiknock Index 87	(RON + MON) / 2

For Other than US, Canada and California Specifications

Use clean, fresh unleaded gasoline with an octane rating equal to or higher than that shown in the table.

Fuel Type	Unleaded Gasoline
Minimum Octane Rating	Research Octane Number (RON) 91

- Close the fuel tank cap and check for any leaks.

Engine Oil (4-stroke)

Engine Oil Level Inspection

NOTE

○*This vehicle's engine is filled with 10W-40 oil from the factory. DO NOT DRAIN and refill the crankcase before use. Check oil level and drain bolt tightness.*

Torque: 30 N·m (3.1 kgf·m, 22 ft·lb)

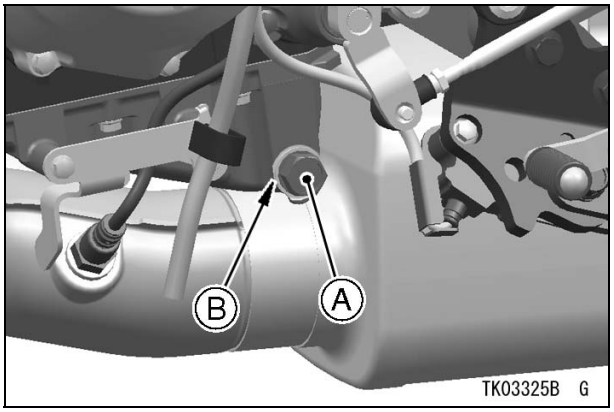

A. Engine Oil Drain Bolt
B. Gasket

- Park the vehicle on level ground.
- Before starting the engine, check that the engine has oil.
- With the motorcycle held level, check that the engine has oil through the oil level inspection window in the lower right side of the engine.

NOTICE
If the engine is run without oil, it will be severely damaged.

- Start the engine and run it for several minutes at idle speed. Stop the engine, then wait several minutes until the oil settles.
- With the motorcycle held level, check the engine oil level through the oil level inspection window. The oil level should come up between the upper and lower level lines next to the oil level inspection window.

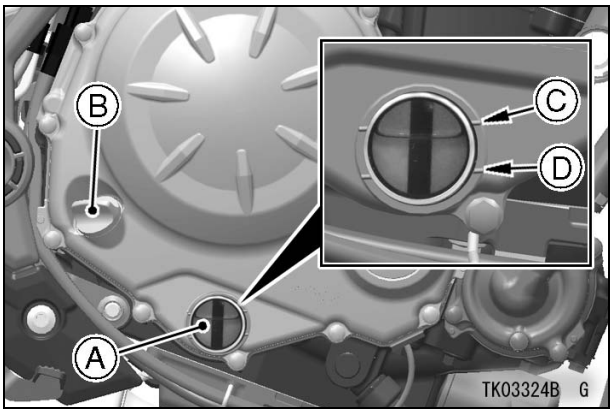

A. Oil Level Inspection Window
B. Oil Filler Cap
C. Upper Level Line
D. Lower Level Line

- If the oil level is too high, remove the excess oil through the oil filler opening, using a syringe or some other suitable device.
- If the oil level is too low, add oil to reach the correct level. Use the same type of oil that is already in the engine.
- When replacing the cap, be sure the O-ring is in place, and tighten the cap in finger tight.

Recommended Engine Oil

Type:	**API SG, SH, SJ, SL or SM with JASO MA, MA1 or MA2**
Viscosity:	**SAE 10W-40**
Capacity:	**1.6 L (1.7 US qt) [when filter is not removed]**
	1.8 L (1.9 US qt) [when filter is removed]

NOTE

○*Do not add any chemical additive to the oil. Oils fulfilling the above requirements are fully formulated and provide adequate lubrication for both the engine and the clutch.*

Although 10W-40 engine oil is the recommended oil for most conditions, the oil viscosity may need to be changed to accommodate atmospheric conditions in your riding area.

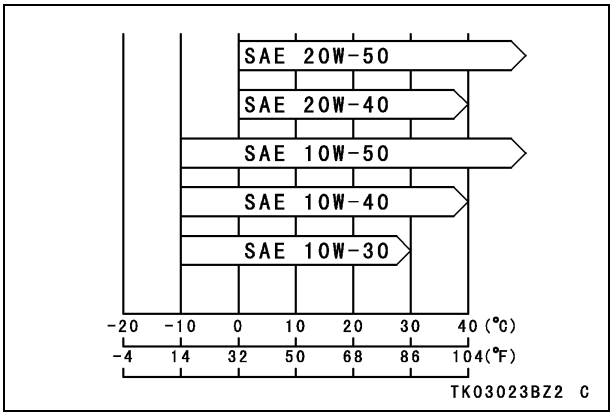

Throttle Grip and Cable

Throttle Grip Free Play Inspection

- Inspect the throttle grip free play. If the free play is incorrect, adjust the throttle cables.

Throttle Grip Free Play:

2 ~ 3 mm (0.08 ~ 0.12 in.)

- Check that the throttle grip moves smoothly from full open to close, and the throttle closes quickly and completely in all steering positions by the return spring. If the throttle grip does not return properly, check the throttle cable routing, grip free play, and for possible cable damage. Then lubricate the throttle cables.

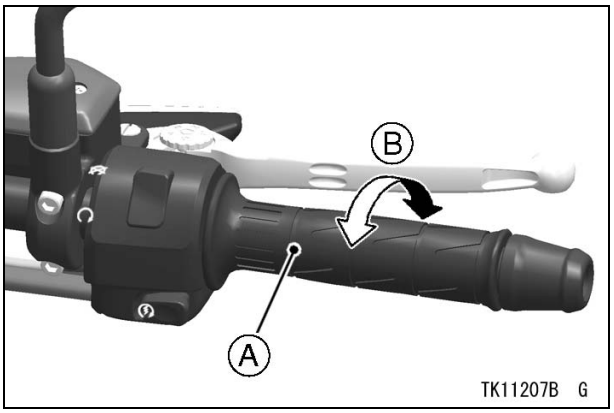

A. Throttle Grip

B. 2 ~ 3 mm (0.08 ~ 0.12 in.)

- Run the engine at idle speed, and turn the handlebars all the way to the right and left to ensure that the idle speed does not change. If the idle speed increases, check the throttle grip free play.

⚠ WARNING

Operation with incorrectly routed, improperly adjusted or damaged cables could result in an unsafe riding condition. Be sure the cables are routed correctly, properly adjusted and are not damaged in any way.

Throttle Grip Free Play Adjustment

- Loosen the locknut at the upper end of the throttle cable, and turn the throttle cable adjuster until the specified amount of play is obtained.
- Tighten the locknut.

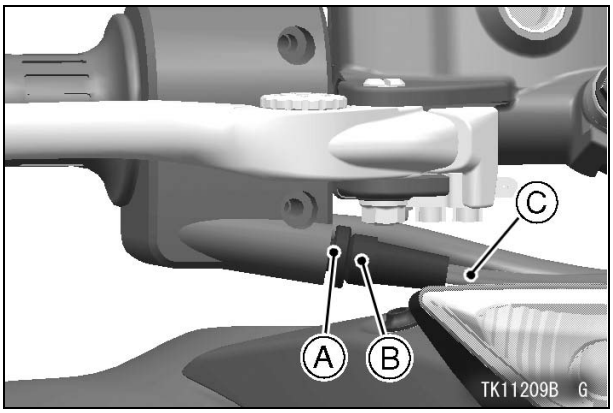

A. Locknut

B. Adjuster

C. Throttle Cable (Accelerator Cable)

- If the throttle cable can not be adjusted by using the cable adjuster at the throttle grip, use the cable adjuster near the cylinder head.
- Loosen the locknut at the throttle grip and turn in the adjuster fully.
- Tighten the locknut.
- Turn out the throttle cable (decelerator cable) adjuster until there is no play when the throttle grip is completely closed. Tighten the locknut.

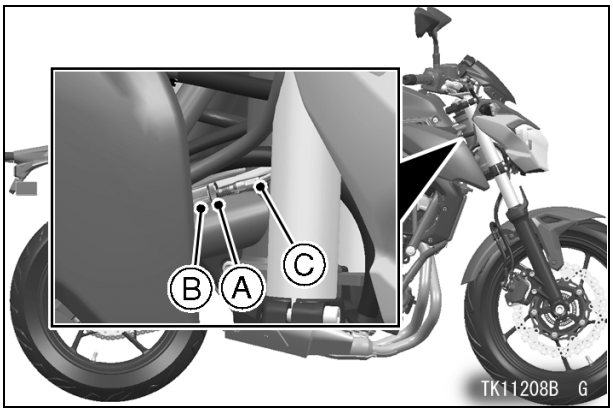

A. Locknut

B. Adjuster

C. Throttle Cable (Decelerator Cable)

- Turn out the throttle cable (accelerator cable) adjuster until 2 ~ 3 mm (0.08 ~ 0.12 in.) of throttle grip play is obtained. Tighten the lock-nut.

Rear Brake Light Switch

Rear Brake Light Switch Adjustment

- Turn the ignition switch on. The brake light should illuminate when the brake pedal is depressed about 10 mm (0.39 in.)

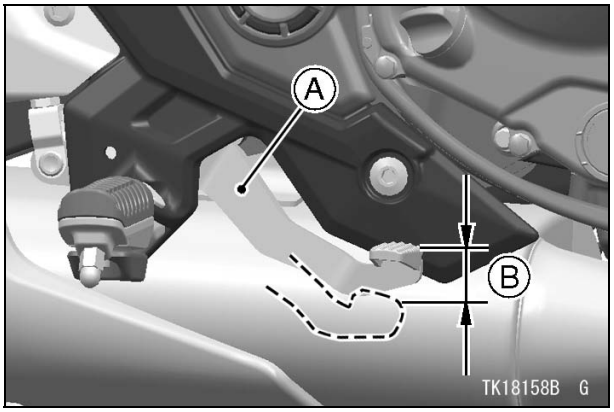

A. Brake Pedal

B. 10 mm (0.39 in.)

- If it does not, turn the adjusting nut at the rear brake light switch as required.
- Remove the bolts and washers.
- Remove the right frame cover.

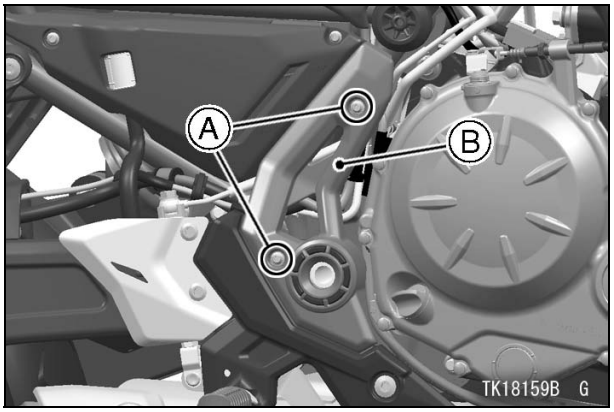

A. Bolts and Washers

B. Right Frame Cover

- To adjust the rear brake light switch, move the switch up or down by turning the adjusting nut.

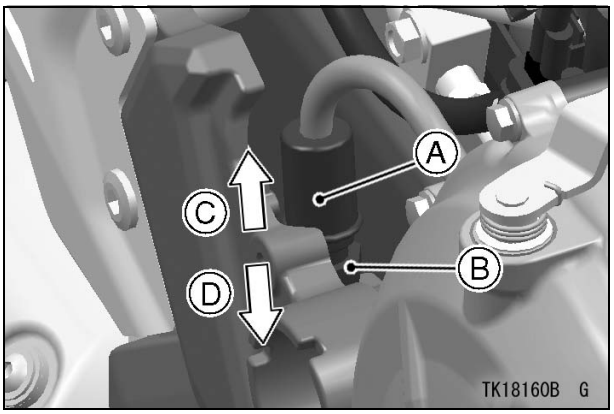

A. Rear Brake Light Switch

B. Adjusting Nut

C. Lights sooner

D. Lights later

NOTICE
To avoid damaging the electrical connections inside the switch, be sure that the switch body does not turn during adjustment.

- Install the right frame cover, and tighten its bolts together with the washers.

Idle Speed Adjustment

- Start the engine and warm it up thoroughly.
- Adjust the idle speed to 1 250 ~ 1 350 r/min (rpm) by turning the idle adjusting screw.

Idle Speed: 1 250 ~ 1 350 r/min (rpm)

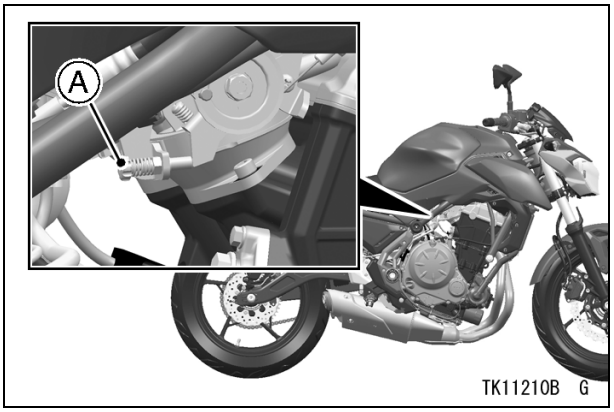

A. Idle Adjusting Screw

- Open and close the throttle grip a few times to make sure that the idle speed does not change.
- With the engine idling, turn the handlebars to each side. If handlebars movement changes the idle speed, check the throttle cable routing and free play.

⚠ WARNING

Operation with incorrectly routed or damaged throttle cable could result in an unsafe riding condition. Be sure the throttle cable is routed correctly, properly adjusted and is not damaged in any way.

- Check for any exhaust leaks and correct if necessary.

Headlight Aim

The headlight beam is adjustable both horizontally and vertically. Headlight aim must be correctly adjusted for safe riding as well as oncoming drivers. In most areas it is illegal to ride with improperly adjusted headlights.

NOTE

○*The left and right adjusters on the headlight can move the direction of the headlight beam to up, down, left and right by turning each adjuster itself as the below table.*

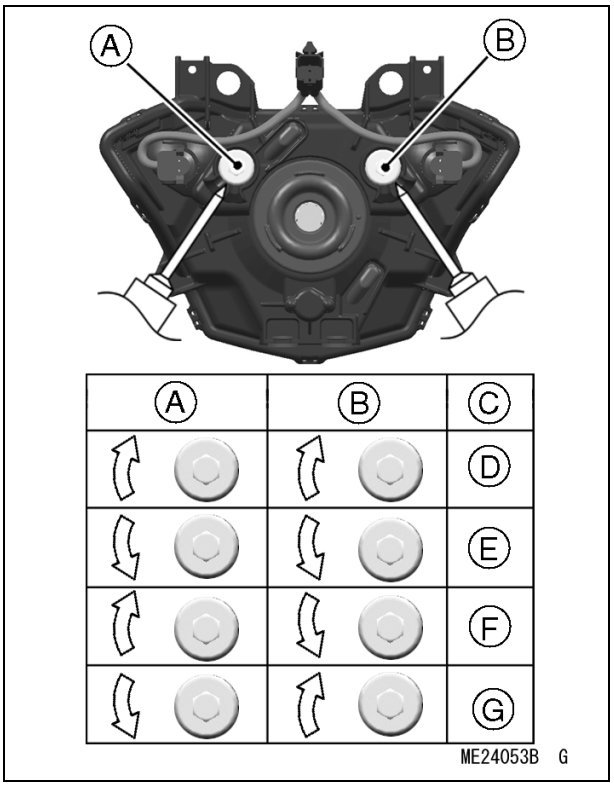

A. Left Adjuster
B. Right Adjuster
C. Moving Direction of Headlight Beam
D. Up
E. Down
F. Left
G. Right

- To move the headlight beam leftward, turn the left adjuster clockwise and turn the right adjuster counterclockwise same number until the beam points straight ahead.
- To move the headlight beam rightward, turn the left adjuster counterclockwise and turn the right adjuster clockwise same number until the beam points straight ahead.
- If not properly adjusted horizontally, the beam will point to one side rather than straight ahead.
- To move the headlight beam upward, turn the both adjusters clockwise same number.
- To move the headlight beam downward, turn the both adjusters counterclockwise same number.
- If adjusted too low, neither low nor high beam will illuminate the road far enough ahead. If adjusted too high, the high beam will fail to illuminate the road close ahead, and the low beam will blind oncoming drivers.

For US and Canada Models

NOTE

○*On high beam, the brightest point should be slightly below horizontal. The proper angle is 0.4 degrees below horizontal. This is a 50 mm (2.0 in.) drop at 7.6 m (25 ft) measured from the center of the headlight, with the motorcycle on its wheels and the rider seated.*

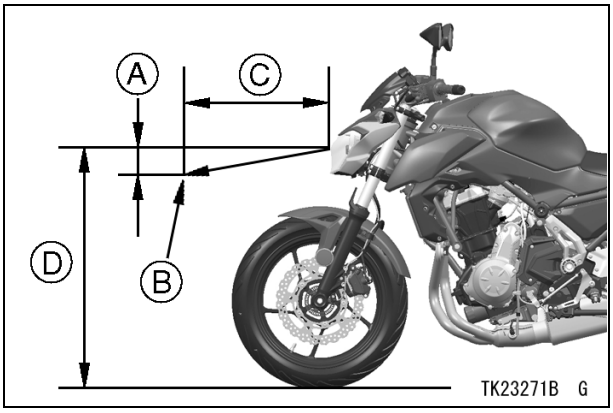

A. 50 mm (2.0 in.)
B. Center of Brightest Spot
C. 7.6 m (25 ft)
D. Height of Headlight Center

For other than US and Canada Models

NOTE

○*On high beam, the brightest point should be slightly below horizontal with the motorcycle on its wheels and the rider seated. Adjust the headlight to the proper angle according to local regulation.*

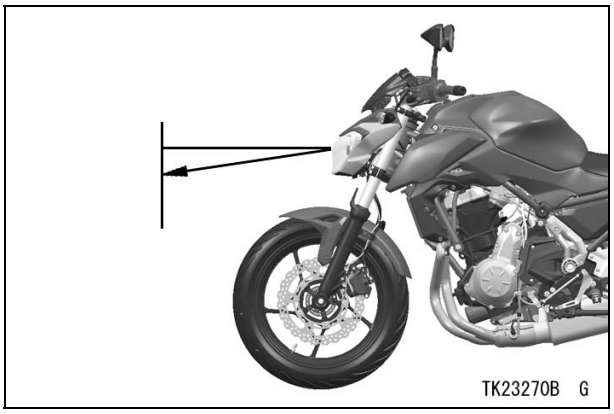

Digital Meter

Check the Unit Setting: km/h, mph

km/h·Mph Display can alternate between English and metric modes (mph and km/h) on the digital meter. Make sure that mph or km/h is correctly displayed according to local regulations before sale.

NOTE

○*Do not operate the vehicle with the digital meter displaying the wrong unit (mph or km/h) of the digital meter. Shift the mph km/h display on the digital meter as follows.*

- Turn the ignition switch on.
- Push the left meter button to select the odometer.

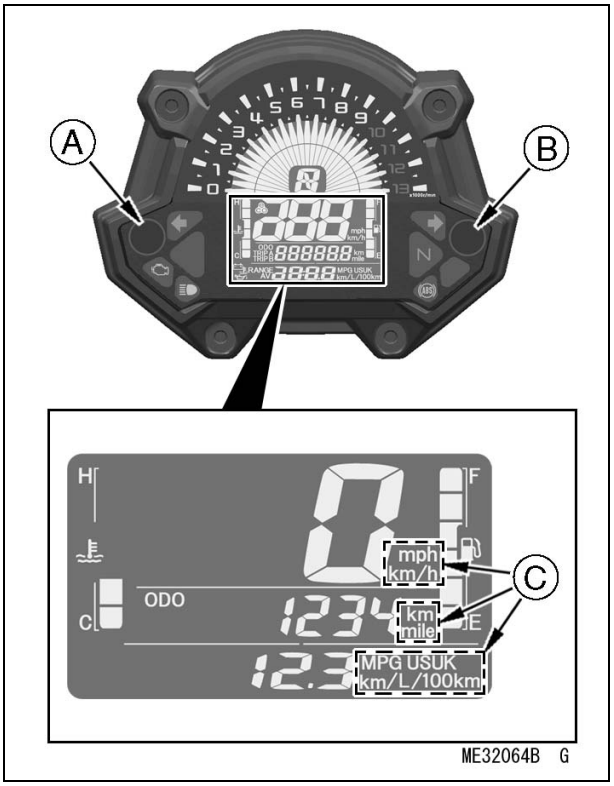

A. Left Meter Button

B. Right Meter Button

C. Display Units

- Push the right meter button while pushing the left meter button to select the meter display units. The display units can be shifted in the following order.

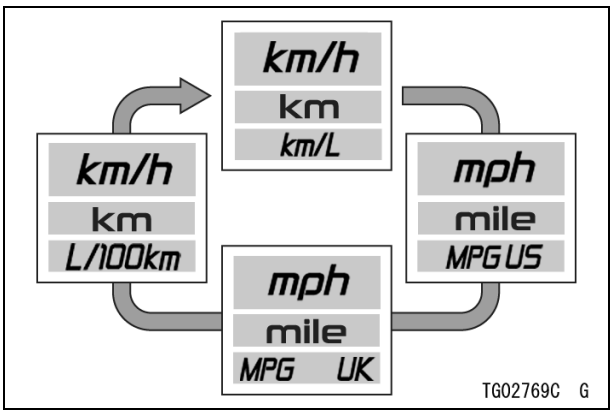

License Plate Mounting Holes

The license plate mounting bracket at the rear end of the motorcycle has two holes where the license plate mounting bolts go through.

Original Mounting Bolt Holes:

Diameter: 7 mm (0.3 in.)

Center to center: 120 mm (4.72 in.)

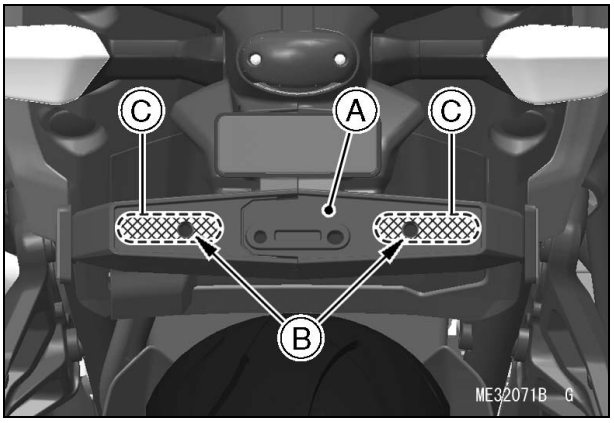

A. License Plate Mounting Bracket

B. Original Mounting Bolt Holes

C. Recessed Mounting Hole Areas

In case the original mounting bolt holes would not fit to your license plate, drill new mounting holes [ϕ7 mm (0.3 in.)] in the recessed areas. New mounting holes should be symmetric to the motorcycle center.

This page intentionally left blank.

Fastener Check

- The torque values listed are for assembly and preparation items only, see the appropriate Service Manual for a more comprehensive list. Check tightness of all fasteners that are in the table before retail delivery. Also check to see that each cotter pin or circlip is in place.

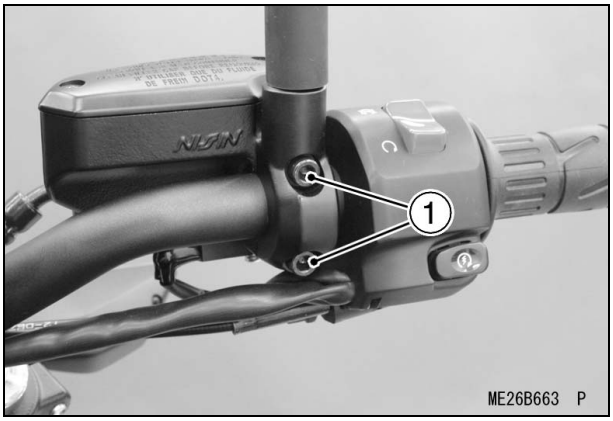

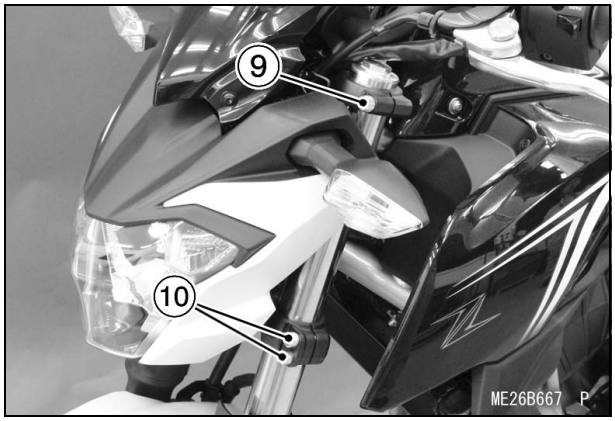

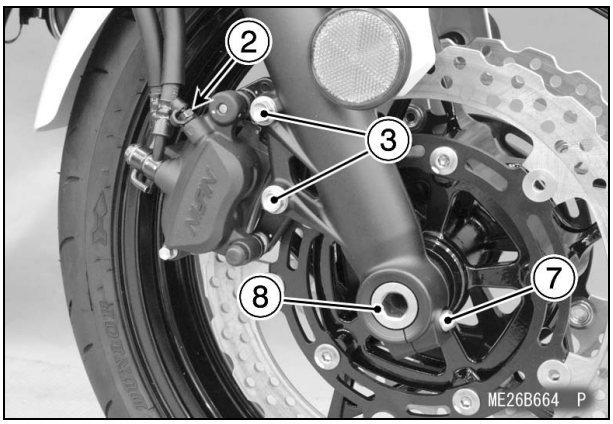

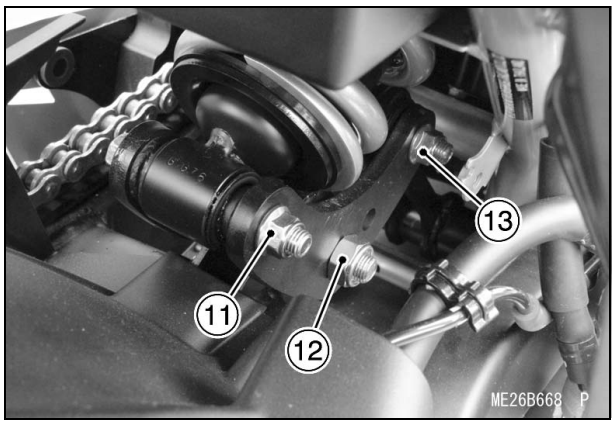

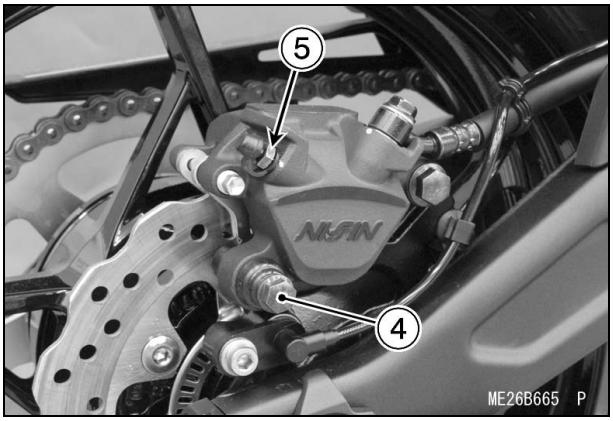

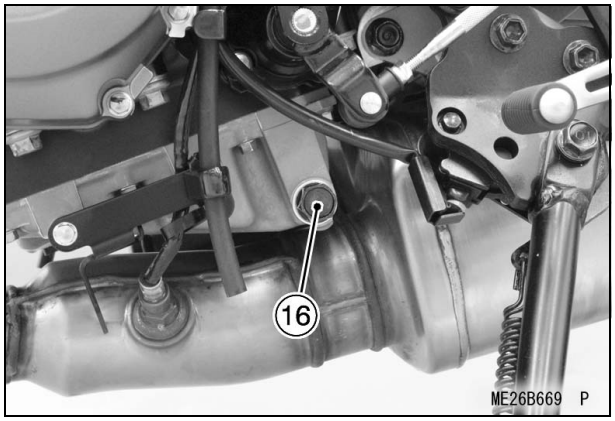

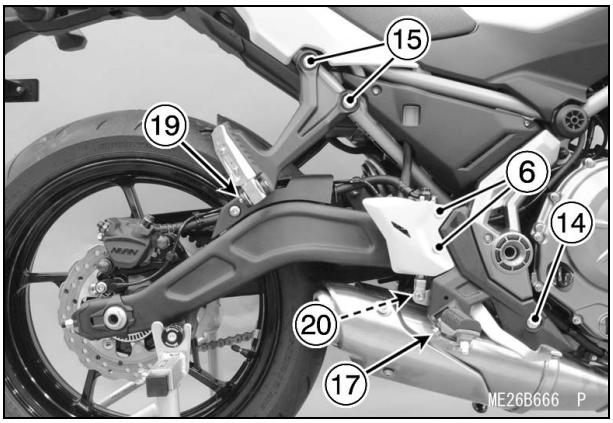

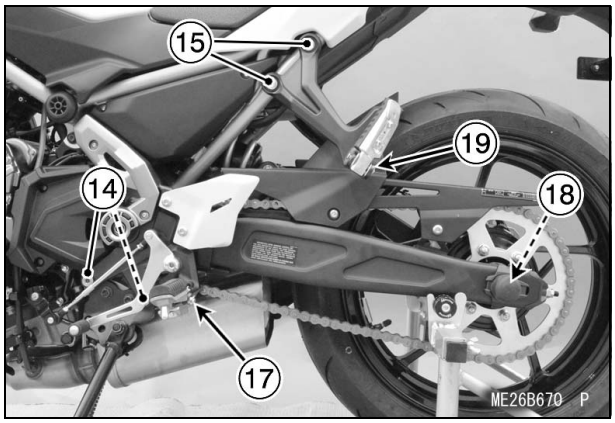

No.	Fastener	Torque			Remarks
		N·m	kgf·m	ft·lb	
Brakes					
1	Front master cylinder clamp bolts	11	1.1	97 in·lb	
2	Front caliper bleed valve (Left and Right)	7.8	0.80	69 in·lb	
3	Front caliper mounting bolt (Left and Right)	25	2.5	18	
4	Rear caliper holder bolt	22	2.2	16	
5	Rear brake bleed valve	7.8	0.80	69 in·lb	
6	Rear master cylinder mounting bolt	25	2.5	18	
Wheel					
7	Front axle clamp bolt (Right)	20	2.0	15	
8	Front axle	108	11.0	79.7	
Suspension					
9	Upper front fork clamp bolt (Left and Right)	20	2.0	15	
10	Lower front fork clamp bolt (Left and Right)	20	2.0	15	
11	Lower rear shock absorber bolt	34	3.5	25	
12	Rocker arm bolt	59	6.0	44	
13	Tie-rod bolt	44	4.5	32	
Others					
14	Front footpeg bracket bolt (Left and Right)	34	3.5	25	
15	Rear footpeg bracket bolt (Left and Right)	25	2.5	18	
Engine Oil Drain					
16	Engine oil drain bolt	30	3.1	22	
Cotter Pin or Circlip					
17	Front footpeg pin circlip (Left and Right)	–	–	–	
18	Rear axle nut cotter pin	–	–	–	
19	Rear footpeg pin circlip (Left and Right)	–	–	–	
20	Rear master cylinder push rod cotter pin	–	–	–	

Standard Torque Table

This table relating tightening torque to thread diameter, lists the basic torque for bolts and nuts. Use this table for only the bolts and nuts which do not require a specific torque value. All of the values are for use with dry solvent -cleaned threads.

General Fasteners

Threads dia. (mm)	Torque		
	N·m	kgf·m	ft·lb
5	3.4 ~ 4.9	0.35 ~ 0.50	30 ~ 43 in·lb
6	5.9 ~ 7.8	0.60 ~ 0.80	52 ~ 69 in·lb
8	14 ~ 19	1.4 ~ 1.9	10.0 ~ 13.5
10	25 ~ 34	2.6 ~ 3.5	19.0 ~ 25
12	44 ~ 61	4.5 ~ 6.2	33 ~ 45
14	73 ~ 98	7.4 ~ 10.0	54 ~ 72
16	115 ~ 155	11.5 ~ 16.0	83 ~ 115
18	165 ~ 225	17.0 ~ 23.0	125 ~ 165
20	225 ~ 325	23.0 ~ 33.0	165 ~ 240

Test Ride the Motorcycle

- Complete the test ride checklist.

Control Cables:

Throttle cables must work without binding in any steering position.

Steering:

Action is free from lock-to-lock.

Suspension:

Check operation front and rear.

Engine:

Electric starter works properly and engine starts promptly. Good throttle response and return.

Transmission and Clutch:

Smooth operation.

Brakes:

Adequate, smooth stopping power, No drag.

Digital Meter:

Check operation

Electrical System:

Headlight - check high and low beams.

Taillight - check operation.

Brake Light - check operation.

Turn Signal Lights - check operation.

Horn - check operation.

Instrument Lights and Indicator Lights - Check operation.

Engine Stop Switch Works:

Starter Interlock Switch Works:

No Unusual Noises:

No Fuel, Oil, Brake Fluid, or Coolant Leaks:

PREPARATION COMPLETE.

⚠ WARNING

New tires are slippery and may cause loss of control and serious injury or death. A break-in period of 160 km (100 miles) is necessary to establish normal tire traction. During break-in, avoid sudden and maximum braking, acceleration, and hard cornering.

A & P Check List

- Complete the A & P Check List.

Part No.99931-1573-02

MODEL APPLICATION

Year	Model	Name
2017	ER650GH	Z650
2017	ER650HH	Z650 ABS

Kawasaki Heavy Industries, Ltd. Motorcycle & Engine Company

Printed in Japan