PARTS LIST

SURELOK®

LIT NO: L1055
DATE: October 2017 **REVISION:** E

TABLE OF CONTENTS

INTRAAX® AAT 23K/25K AND AANT 23K SUSPENSIONS 2
ULTRAA-K® UTKNT 40K SLIDER SUSPENSION 3
VANTRAAX® HKANT 40K/46K AND HKA180 SLIDER SUSPENSIONS 4
VANTRAAX HKAT 46K SLIDER SUSPENSION 6
HK™ SERIES HK190/230 SLIDER SUSPENSIONS 8
HT™ SERIES HT190/230 TOP-MOUNT SUSPENSIONS. 10
HT SERIES HT250US UNDERSLUNG SUSPENSION. 11
HS SERIES HS190/230 SLIDER SUSPENSIONS. 12
SURELOK® AIR CONTROL KITS 13

HENDRICKSON
The World Rides On Us®

INTRAAX® AANT 23K Suspension

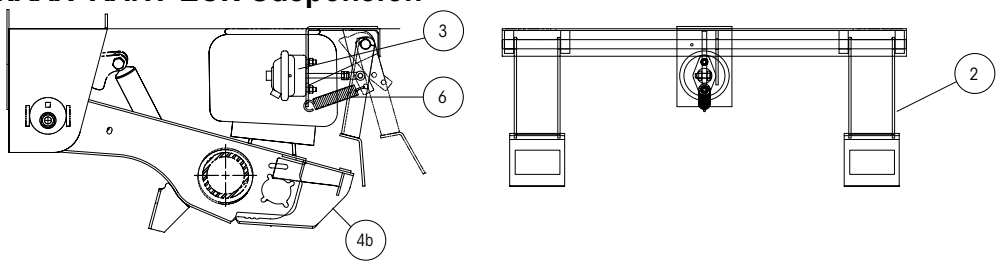

INTRAAX AAT 23K/25K Suspensions

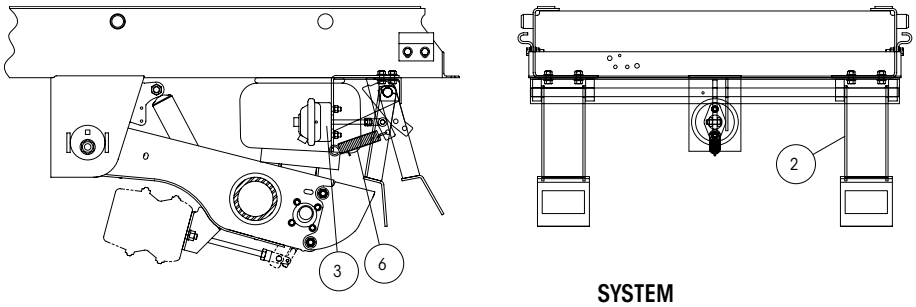

Note: Picture does not depict all models available. Please contact Hendrickson for retrofit kits. SURELOK models with identification tag will read SLK_.XXX.

ITEM	DESCRIPTION	PART NO.	SYSTEM QTY.	NOTE
1	**SURELOK® RETROFIT KIT**[1] (Not shown)	SLK_-XXX	1	Please contact Hendrickson for assistance

SURELOK SERIES	SUSPENSION MODEL
SLKF	AAT Models
SLKV	AAT Models with High Control
SLKT	AANT Models
SLKY	AANT Models with Long Beams

2 RIDE HEIGHT LOCK ASSEMBLY

Axle Track	71.5"	77.5"
AIR SPRING ACTUATED (SLKT with High Control)		
14.0" ride height	–	S-36186-21
BRAKE CHAMBER ACTUATED (SLKF, SLKV AND SLKT)		
13.5" ride height	S-22487-1	S-22487-5
14.0" ride height	S-22487-2	S-22487-6
14.5" ride height	S-22487-3	S-22487-7
15.0" ride height	S-22487-4	S-22487-8
16.0" ride height	S-22487-9	S-22487-13
16.5" ride height	S-22487-17	S-22487-18
17.0" ride height	S-22487-11	S-22487-14
18.0" ride height	S-22487-11	S-22487-15
19.0" ride height	S-22487-12	S-22487-16

3	**BRAKE CHAMBER**	A-21452		Type 9 Chamber
4	**BEAM EXTENSION** (Not shown)			
	4a Bolt-on AAT			SLKF, SLKV models; Includes beam extension and bolt kit
	Roadside	S-33016-1	1	
	Curbside	S-33016-2	1	
	4b Weld-on AANT			SLKT models; Includes beam extension
	Roadside	D-27653-1	1	
	Curbside	D-27653-2	1	
5	**BEAM EXTENSION HARDWARE** (Not shown)			
	BEAM EXTENSION BOLT KIT (Not shown)	S-25980		Includes SA-6900-16 & SA-7000-6
	5/8" - 11" flanged screw	SA-6900-16	8	
	5/8" - 11" prevailing torque flanged nut	SA-7000-6	8	
6	**SPRING**	S-21539	1	1.25" × 6.125" X 0.177"

1. Many SURELOK Retrofit kit options exist based on suspension model, ride height, slider width and valve selection. Contact Hendrickson for assistance.

ULTRAA-K® UTKNT 40K Slider Suspension

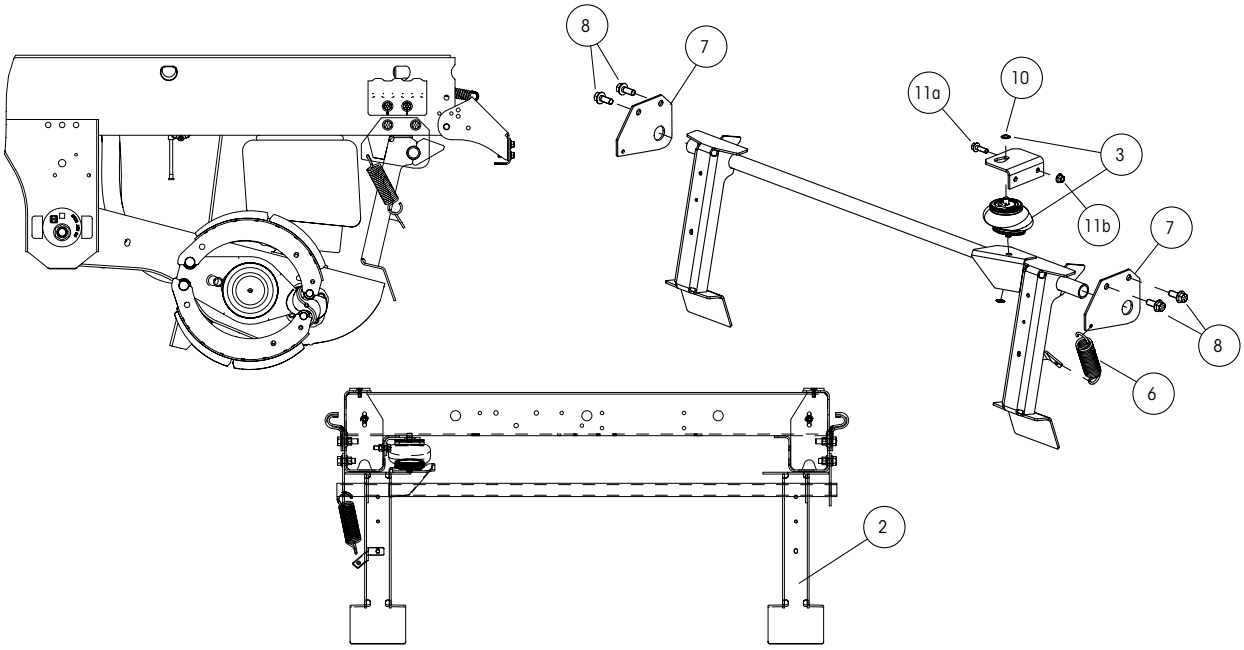

ITEM	DESCRIPTION	PART NO.	SYSTEM QTY.	NOTE
1	**SURELOK® RETROFIT KIT**[1] (Not shown)	SLK_.XXX		Please contact Hendrickson for assistance

SURELOK SERIES	SUSPENSION MODEL
SLKAA	Narrow pivot ULTRAA-K® with short beams
SLKAB	Narrow pivot ULTRAA-K with long beams

ITEM	DESCRIPTION	PART NO.	SYSTEM QTY.	NOTE
2	**RIDE HEIGHT LOCK ASSEMBLY**			

Slider Box Width	48" Box
AIR SPRING ACTUATED (SLKAA)	
16.0" ride height	S-31763-1C / S-31763-2GV

ITEM	DESCRIPTION	PART NO.	SYSTEM QTY.	NOTE
3	**AIR SPRING ACTUATOR ASSEMBLY**	S-25593	1	Includes air spring actuator and 2 speed nuts
4	**BEAM EXTENSION WELDMENTS** (Not shown)			SLKAA models
	Roadside	D-27653-1	1	
	Curbside	D-27653-2	1	
5	**RESTRAINT BOLT KIT**	S-25516	1	Includes 1 bolt, 1 nut and 1 washer
6	**SPRING**	B-26597	1	1.50" × 6.63" × 0.177"
7	**SHAFT BRACKET**	C-31767	2	2 per bracket
8	**MOUNTING HARDWARE FOR BRACKET**	SA-6900-10	4	2 per bracket; 1/2"-13" flanged screw
9	**SPEED NUT** (Not shown)	A-24482-1	2	Included in S-25593
10	**ACTUATOR BRACKET**	C-31765	1	
11	**ACTUATOR BRACKET HARDWARE**[2]			
	11a 3/8" - 16" Flanged screws	SA-6900-5	1	
	11b 3/8" - 16" Flanged nut	SA-7000-3	1	

2. Install rear bolt nut only.

VANTRAAX® HKANT 40K / 46K and HKA180 Slider Suspensions

Illustration 1
Units shipped before **May 1999**

Obsolete

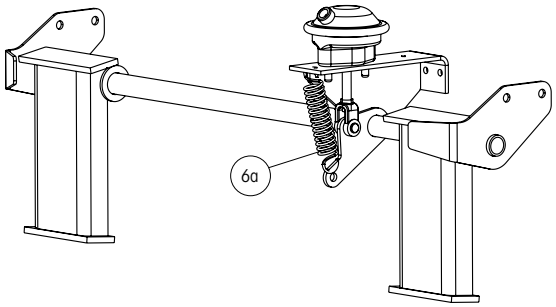

Illustration 2
Units shipped between
May 1999 and December 2001

Obsolete

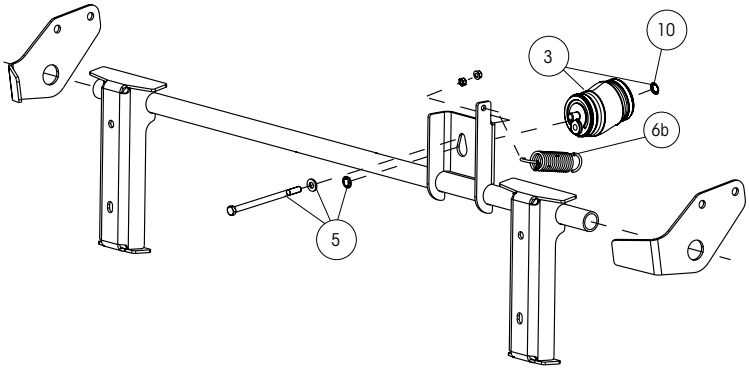

Illustration 3
Units shipped between
December 2001
and December 2015

Obsolete

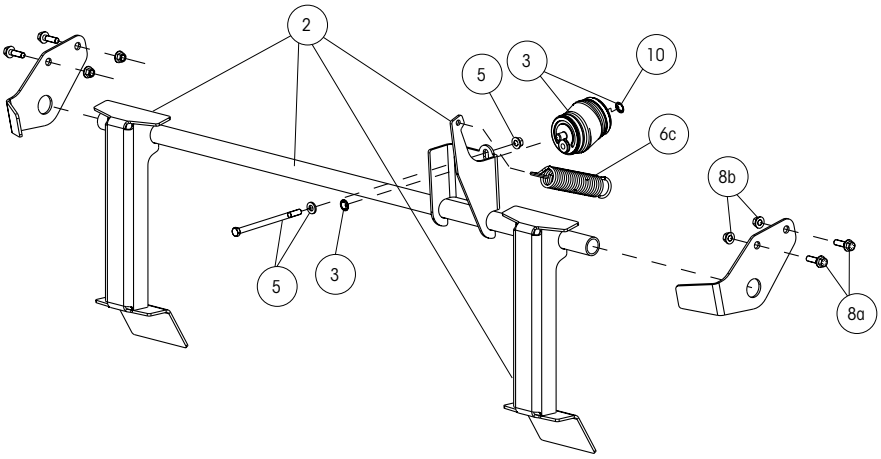

Illustration 4
Units shipped
after **December 2015**

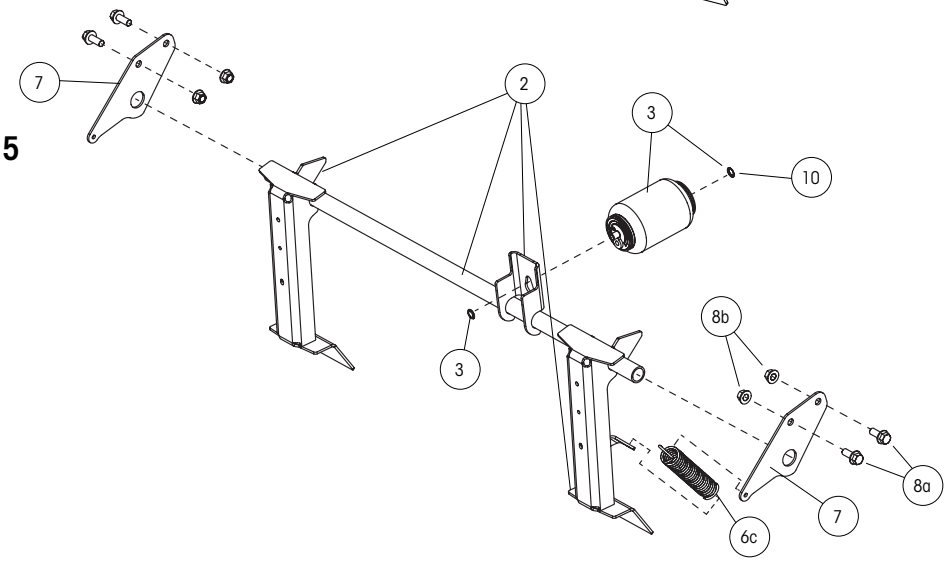

VANTRAAX® HKANT 40K / 46K and HKA180 Slider Suspensions *(Continued)*

ITEM	DESCRIPTION	PART NO.	SYSTEM QTY.	NOTE
1	**SURELOK® RETROFIT KIT**[1] (Not shown)	SLK_.XXX		Please contact Hendrickson for assistance

SURELOK SERIES	SUSPENSION MODEL
SLKS	Narrow pivot VANTRAAX with short beams
SLKP	Narrow pivot VANTRAAX with long beams

2 RIDE HEIGHT LOCK ASSEMBLY

Slider Box Width	42" Box	48" Box		54" Box
		STANDARD	GALVANIZED	
AIR SPRING ACTUATED (SLKS and SLKP)				
15.0" ride height	S-36182-2	S-36186-6	–	S-36186-15
16.0" ride height	S-36186-4	S-36186-8	S-36186-23	S-36186-17
16.5" ride height	S-36186-13	S-36186-14	S-36186-24	S-36186-18
17.0" ride height	S-36186-9	S-36186-11	S-36186-25	S-36186-19
18.0" ride height	S-36186-9	S-36186-11	–	S-36186-19
19.0" ride height	S-36186-10	S-36186-12	–	S-36186-20

3	**AIR SPRING ACTUATOR ASSEMBLY**	S-25593	1	Includes air spring actuator and 2 speed nuts
4	**BEAM EXTENSION WELDMENTS** (Not shown)			SLKS models
	Roadside	D-27653-1	1	
	Curbside	D-27653-2	1	
5	**RESTRAINT BOLT KIT**	S-25516	1	Includes 1 bolt, 1 nut and 1 washer
6	**SPRING**			
	6a Units shipped before May 1999	S-21539	1	1.25" × 6.125" × 0.177"; Illustration 1
	6b Units shipped between May 1999 and December 2001	S-24495	1	1.27" × 4.40" × 0.148"; Illustration 2
	6c Units shipped after December 2001	B-26597	1	1.50" × 6.63" × 0.177"; Illustration 3 and 4
7	**SHAFT BRACKET**	S-36137	1	Illustrations 2, 3 and 4 only
8	**MOUNTING HARDWARE FOR SHAFT BRACKET**			
	8a 1/2" - 13" flanged screw	SA-6900-10	4	2 per bracket
	8b 1/2" - 13" prev-torq. flanged nut	SA-7000-1	4	2 per bracket
9	**MOUNTING HARDWARE FOR BRAKE CHAMBER** (Not shown)			
	9a 3/8" - 16" Flanged nut	SA-7000-3	1	
	9b 3/8" - 16" Flanged screw	SA-6900-5	1	
10	**SPEED NUT**	A-24482-1	2	Included in S-25593

VANTRAAX® HKAT 46K Slider Suspension

Illustration 1
Units shipped before
April 1998

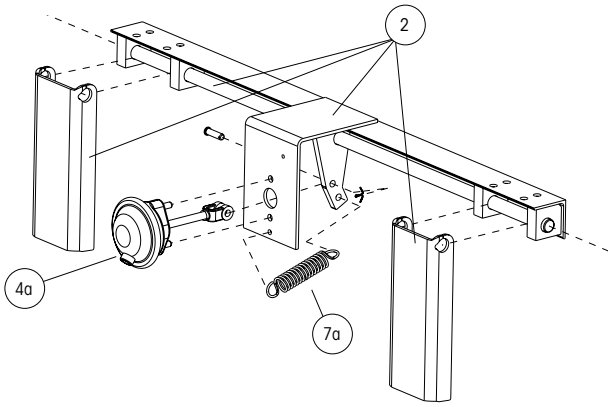

Illustration 2
Units shipped between
April 1998 and May 1999

Obsolete

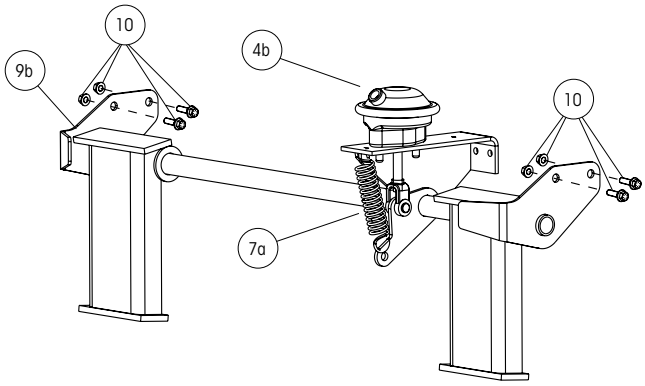

Illustration 3
Units shipped between
May 1999 and December 2001

Obsolete

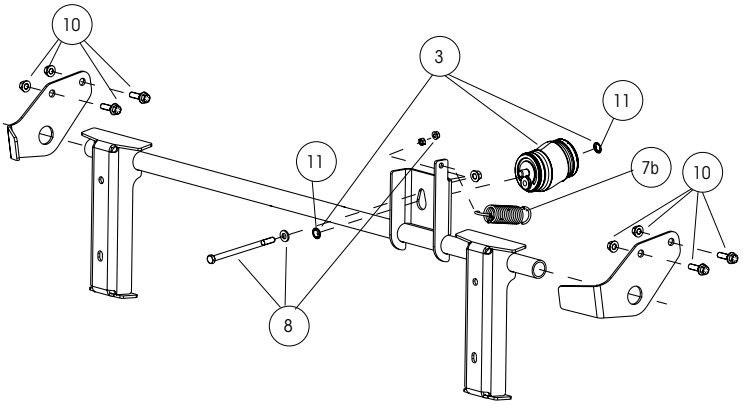

Illustration 4
Units shipped between
December 2001 and December 2015

Obsolete

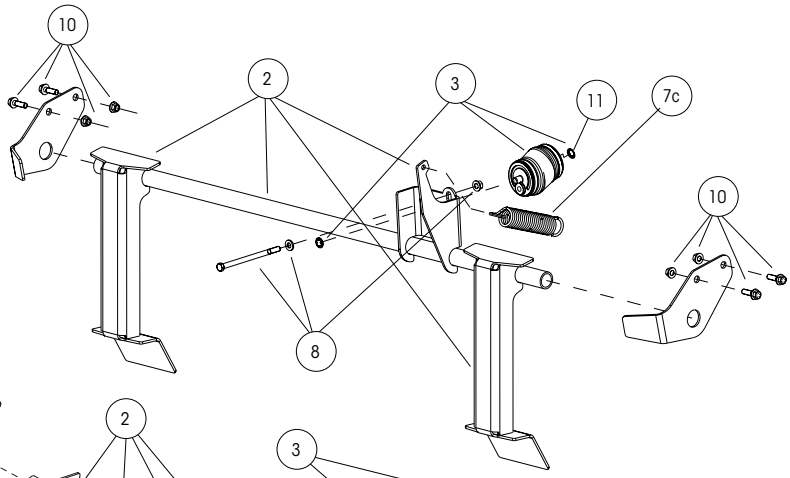

Illustration 5
Units shipped after
December 2015

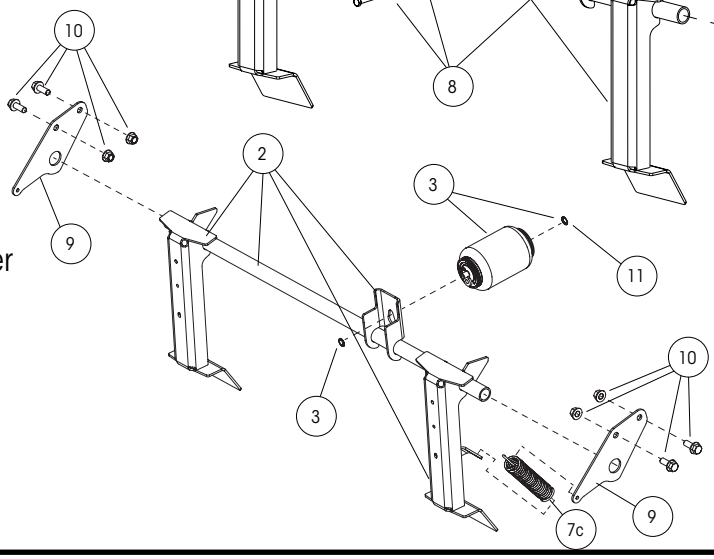

VANTRAAX® HKAT 46K Slider Suspension *(Continued)*

ITEM	DESCRIPTION	PART NO.	SYSTEM QTY.	NOTE
1	**SURELOK® RETROFIT KIT**[1] (Not shown)	SLK_-XXX	1	Please contact Hendrickson for assistance

SURELOK SERIES	SUSPENSION MODEL	DATE PURCHASED
SLKF	Brake chamber actuated version	Wide HKA 200K models sold before May 1999
SLKO	Air spring actuated version	Current models
		Wide pivot VANTRAAX HKAT
		Wide HKA 200K models sold after July 1999

2 RIDE HEIGHT LOCK ASSEMBLY

Slider Box Width	42" Box	48" Box		54" Box
		STANDARD	GALVANIZED	
AIR SPRING ACTUATED (SLKO)				
14.0" ride height	S-36186-2	S-36186-6	–	S-36186-15
15.0" ride height	S-36186-4	S-36186-8	S-36186-22	S-36186-16
15.5" ride height	S-36186-3	S-36186-7	–	S-36186-16
16.0" ride height	S-36186-4	S-36186-8	S-36186-23	S-36186-17
16.5" ride height	S-36186-13	S-36186-14	S-36186-24	S-36186-18
17.0" ride height	S-36186-9	S-36186-11	S-36186-25	S-36186-19
18.0" ride height	S-36186-9	S-36186-11	–	S-36186-19
19.0" ride height	S-36186-10	S-36186-12	–	S-36186-20
BRAKE CHAMBER ACTUATED (SLKF)				
13.5" ride height	S-22487-1	S-22487-5	–	–
14.0" ride height	S-22487-2	S-22487-6	–	–
14.5" ride height	S-22487-3	S-22487-7	–	–
15.0" ride height	S-22487-4	S-22487-8	–	–
16.0" ride height	S-22487-9	S-22487-13	–	–
16.5" ride height	S-22487-17	S-22487-18	–	–
17.0" ride height	S-22487-10	S-22487-14	–	–
18.0" ride height	S-22487-11	S-22487-15	–	–
19.0" ride height	S-22487-12	S-22487-16	–	–

3	**AIR SPRING ACTUATOR ASSEMBLY**	S-25593	1	SLKO model; Includes air spring, actuator and 2 speed nuts
4	**BRAKE CHAMBERS**			
	4a Type 9 (SLKF)	A-21452	1	
	4b Type 12 (SLKF)	S-23169		
5	**BEAM EXTENSIONS** (Not shown)			SLKO, SLKF models; Includes beam extension and bolt kits
	5a Roadside	S-33016-1	1	
	5b Curbside	S-33016-2	1	
6	**BEAM EXTENSION BOLT KIT** (Not shown)	S-25980		Includes SA-6900-16 and SA-7000-6
7	**TENSION SPRINGS**			
	7a 1.25"× 6.13" × 0.177"	S-21539	1	SLFK model, illustration 1 and 2
	7b 1.27"× 4.40" × 0.148"	S-24495	1	SKLO model, illustration 3
	7c 1.5" × 6.63" × 0.177"	B-26597	1	SKLO model, illustration 4 and 5
8	**RESTRAINT BOLT KIT**	S-25516	1	SKLO model, illustration 4 and 5
9	**SHAFT BRACKET**	S-36137	2	SLKO models; Includes 1 bolt, 1 nut and 1 washer
10	**MOUNTING HARDWARE FOR SHAFT BRACKETS**			
	1/2" - 13" flanged screw	SA-6900-10	4	2 per bracket
	1/2" - 13" prevailing torque flanged nut	SA-7000-1	4	2 per bracket
	7/16" hex head bolt	SA-1100-30	1	
	Washer	SA-1500-35	1	
11	**SPEED NUT**	A-24482-1	2	Included in S-25593
12	**BRAKE CHAMBER MOUNTING HARDWARE** (Not shown)			
	12a 3/8-16" flanged screw	SA-6900-5	1	
	12b 3/8-16" prev-torq. flanged nut	SA-7000-3	1	

HK™ SERIES HK190 / 230 Slider Suspensions

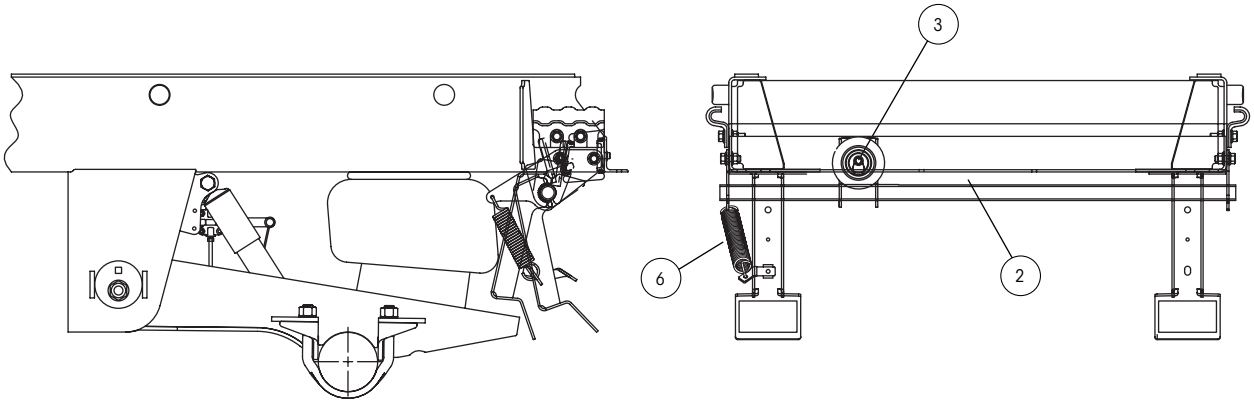

Illustration 4
Units shipped between
December 2001
and December 2015

Obsolete

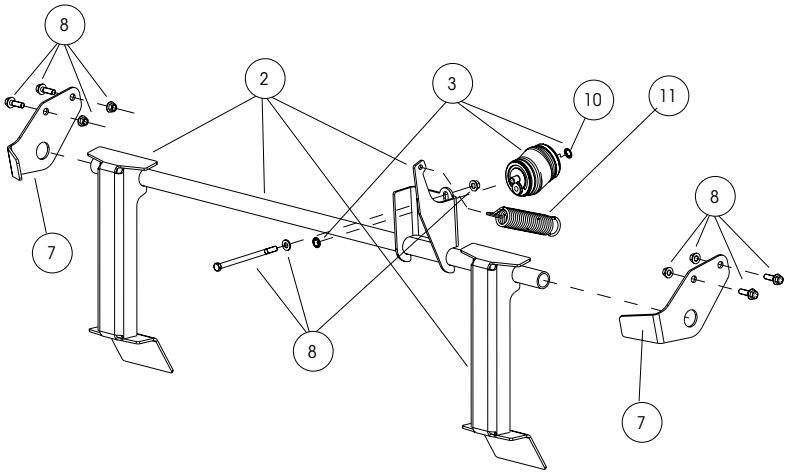

Illustration 5
Units shipped after
December 2015

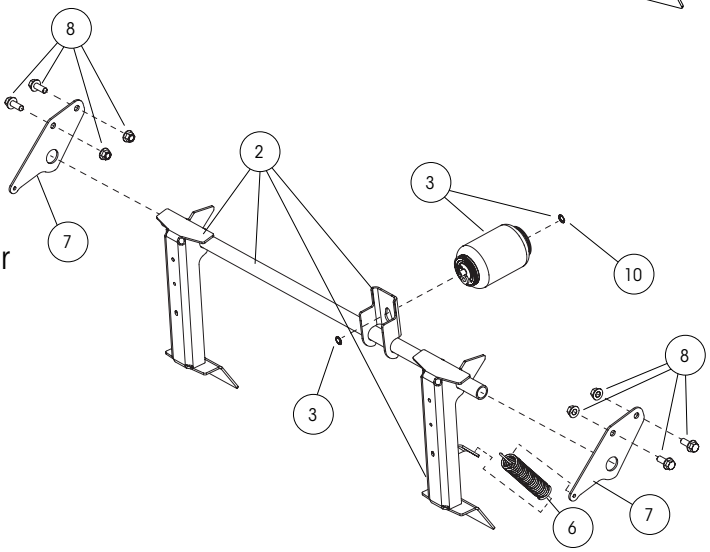

HK™ SERIES HK190 / 230 Slider Suspensions *(Continued)*

ITEM	DESCRIPTION	PART NO.	SYSTEM QTY.	NOTE
1	**SURELOK® RETROFIT KIT**[1] (Not shown)	SLK_-XXX	1	Please contact Hendrickson for assistance

SURELOK SERIES	SUSPENSION MODEL	DATE PURCHASED
SLKN	Long Beams	Sliders made after December 1997
SLKC		Sliders made before December 1997
SLKR	Short Beams	Sliders made after December 1997
SLKM		Sliders made before December 1997

2 RIDE HEIGHT LOCK ASSEMBLY

Slider Box Width	42" Box	48" Box
AIR SPRING ACTUATED (SLKR and SLKN)		
16.0" ride height	S-36187-1	S-36187-6
16.5" ride height	S-36187-2	S-36187-7
17.0" ride height	S-36187-3	S-36187-8
18.0" ride height	S-36187-4	S-36187-9
19.0" ride height	S-36187-5	S-36187-10
BRAKE CHAMBER ACTUATED (SLKC and SLKM)		
16.0" ride height	S-21766-1	S-21766-5
17.0" ride height	S-21766-2	S-21766-6
18.0" ride height	S-21766-3	S-21766-7
19.0" ride height	S-21766-4	S-21766-8

3	**AIR SPRING ACTUATOR ASSEMBLY**	S-25593	1	SLKN and SLKR models; Includes air spring actuator and 2 speed nuts
4	**BRAKE CHAMBER** (Not shown)	A-21452	1	SLKC and SLKM models; Type 9 chamber
5	**BEAM EXTENSION WELDMENT** (Not shown)			
	SLKR models	C-21442	2	
	SLKM models	C-26363	2	
6	**SPRING**			
	1.25" × 6.125" × .177" (Not shown)	S-21539	1	SLKC and SLKM models
	1.50" × 6.63" × .177"	B-26597	1	SLKR and SLKN models
7	**SHAFT BRACKET**	S-36137	2	
8	**MOUNTING HARDWARE FOR SHAFT BRACKET**			2 per bracket
	1/2" - 13" flanged screw	SA-6900-10	4	
	1/2" - 13" prev-torq HEX FLG Nut	SA-7000-1	4	
9	**MOUNTING HARDWARE FOR BRAKE CHAMBER** (Not shown)			
	3/8" - 16" flanged screw	SA-6900-5	4	SLKC and SLKM models
	3/8" - 16" prev-torq HEX FLG Nut	SA-7000-3	4	
10	**SPEED NUT**	A-24482-1	2	SLKN and SLKR models

HT™ SERIES HT190 / 230 Top-mount Suspensions

ITEM	DESCRIPTION	PART NO.	SYSTEM QTY.	NOTE
1	**SURELOK® RETROFIT KIT**[1] (Not shown)	SLKU_-XXX	1	Please contact Hendrickson for assistance

SURELOK SERIES	SUSPENSION MODEL	
SLKL	Long Beams	High Control
SLKQ	Short Beams	
SLKK	Long Beams	Standard
SLKA	Short Beams	

2 RIDE HEIGHT LOCK ASSEMBLY

Slider Box Width	42" Box	48" Box
BRAKE CHAMBER ACTUATED (SLKL and SLKQ)		
14.0" ride height	S-23630-1	S-23630-2
15.0" ride height	S-23630-3	S-23630-4
16.0" ride height	S-23630-5	S-23630-6
17.0" ride height	S-23630-7	S-23630-8
BRAKE CHAMBER ACTUATED (SLKA and SLKK)		
14.0" ride height	S-21443-1	S-21443-5
15.0" ride height	S-21443-2	S-21443-6
16.0" ride height	S-21766-1	S-21766-5
17.0" ride height	S-21443-4	S-21443-8

3	**BRAKE CHAMBER**	A-21452	1	Type 9 chamber
4	**BEAM EXTENSION WELDMENT** (Not shown)	C-26363	2	SLKA and SLKQ models
5	**BEAM EXTENSION SCREW** (Not shown)	SA-6900-8	2	
6	**SPRING**	S-21539	1	1.25" × 6.125" × 0.177"

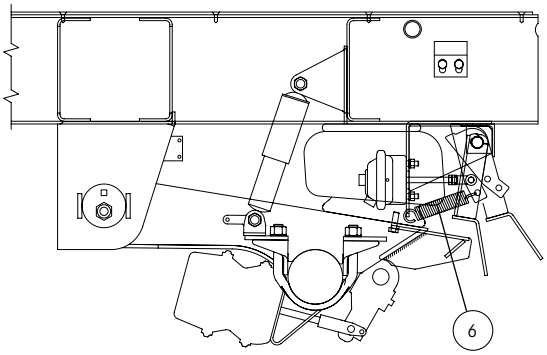

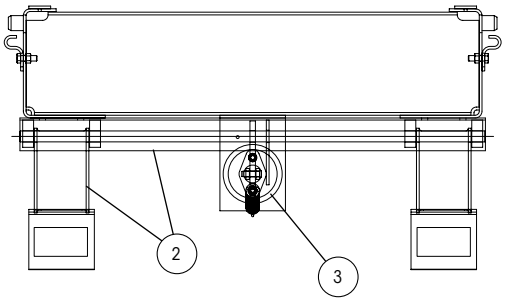

HT™ SERIES HT250US Underslung Suspensions

ITEM	DESCRIPTION	PART NO.	SYSTEM QTY.	NOTE
1	**SURELOK® RETROFIT KIT**[1] (Not shown)	SLKU_-XXX	1	Please contact Hendrickson for assistance

SURELOK SERIES	SUSPENSION MODEL
SLKU	HT SERIES Underslung HT250US

2 **RIDE HEIGHT LOCK ASSEMBLY**

Slider Box Width	42" Box	48" Box
BRAKE CHAMBER ACTUATED (SLKU)		
12.0" ride height	D-27888-1	D-27888-3
14.0" ride height	D-27888-2	D-27888-4

3	**BRAKE CHAMBER**	S-23169	1	Type 12 chamber
4	**SPRING**	S-21539	1	1.25" × 6.125" × 0.177"
5	**GREASE FITTING** (Not shown)	S-22830	4	

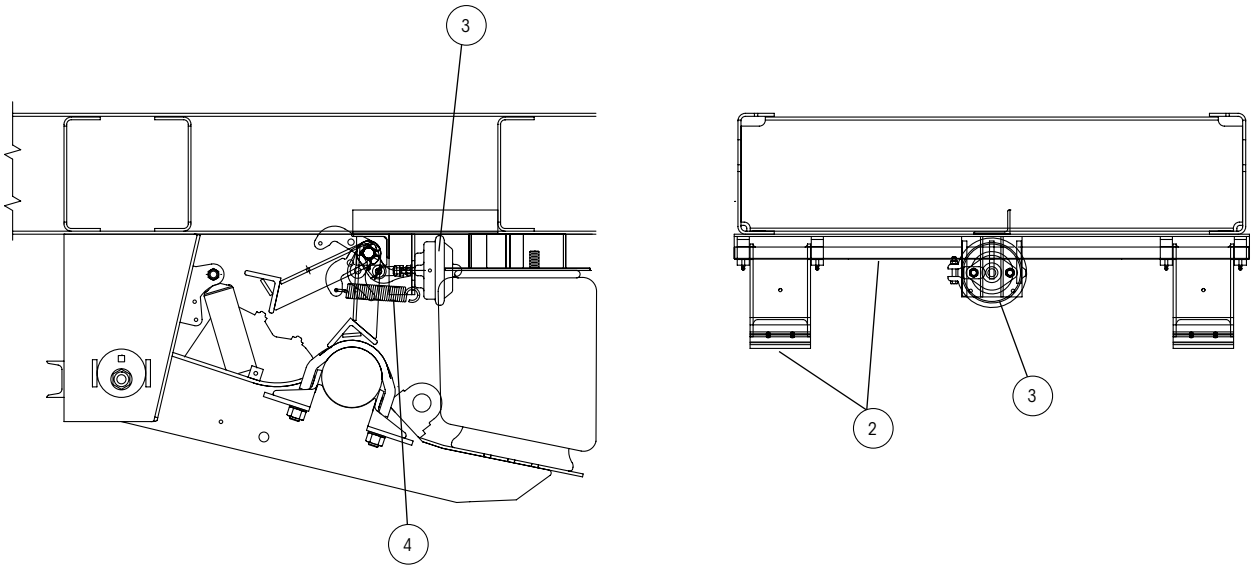

HS SERIES HS190 / 230 Slider Suspensions

ITEM	DESCRIPTION	PART NO.	SYSTEM QTY.	NOTE
1	**SURELOK® RETROFIT KIT**[1] (Not shown)	SLK_-XXX	1	Please contact Hendrickson for assistance

SURELOK SERIES	SUSPENSION MODEL	
SLKB	Long beams	HS models
SLKA	Short beams	

2	**RIDE HEIGHT LOCK ASSEMBLY**			

Slider Box Width	42" Box	48" Box
BRAKE CHAMBER ACTUATED (SLKB AND SLKA)		
14.0" ride height	S-23630-1	S-23630-2
15.0" ride height	S-23630-3	S-23630-4
16.0" ride height	S-23630-5	S-23630-6
17.0" ride height	S-23630-7	S-23630-8

3	**BRAKE CHAMBER**	A-21452	1	Type 9 chamber
4	**SPRING**	S-21539	1	1.25" × 6.125" × 0.177"
5	**MOUNTING HARDWARE** (Not shown)			
	1/2" - 13" flanged screw HTES-1057	SA-6900-8	2	SLKA models
	1/2" - 13" × 100 lg. flanged bolt	SA-6900-6	8	SLKB models
	1/2" - 13" prevailing torque flanged nut	SA-7000-1	8	SLKB models
6	**BEAM EXTENSION**	C-26363	2	SLKA models

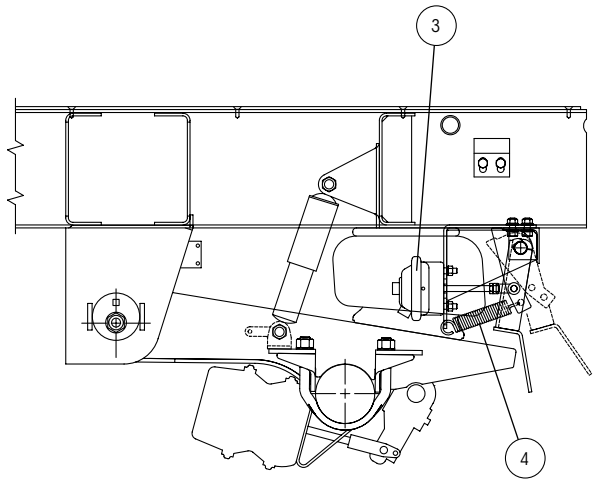

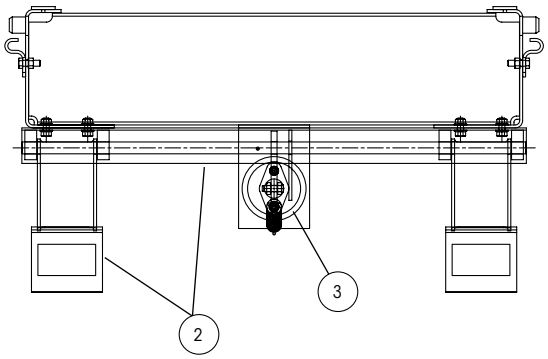

SURELOK® AIR CONTROL KITS

ITEM	DESCRIPTION	PART NO.	SYSTEM QTY.	
	Manual Bypass *– allows you to completely bypass SURELOK®, meaning the legs are disengaged and not functioning.*			
1	**3-WAY BALL VALVE** (Not shown)	VS-22535	1	
	Manual Bypass with Dump *– allows you to completely bypass SURELOK and fully exhaust the trailer's air suspension.*			
2	**3-WAY BALL VALVE**	VS-22535	1	
3	**3-WAY AIR PILOTED VALVE** (Not shown)	VS-23588	1	
4	**2-WAY CHECK VALVE** (Not shown)	VS-24988	1	
	Specialized Auto Dump *– AKSL0001 – Allows SURELOK to engage, then exhausts the trailer's air suspension to rest the SURELOK legs on the suspension beams.*			
5	**3-WAY PILOT VALVE** (Not shown)	VS-24053	1	
6	**CHOKE** (Not shown)	A-27314-1	1	1/8" NPT
	Manual Bypass with Specialized Auto Dump *– Allows you to completely bypass SURELOK, OR allows SURELOK to engage, then exhausts the trailer's air suspension to rest the SURELOK legs on the suspension beams.*			
7	**3-WAY BALL VALVE** (Not shown)	VS-22535	1	

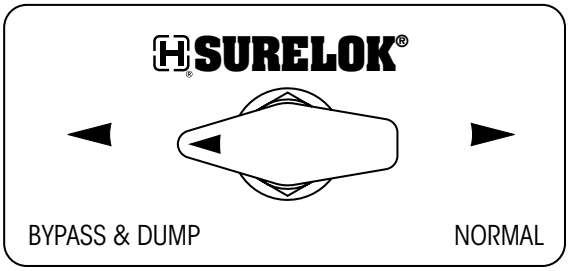

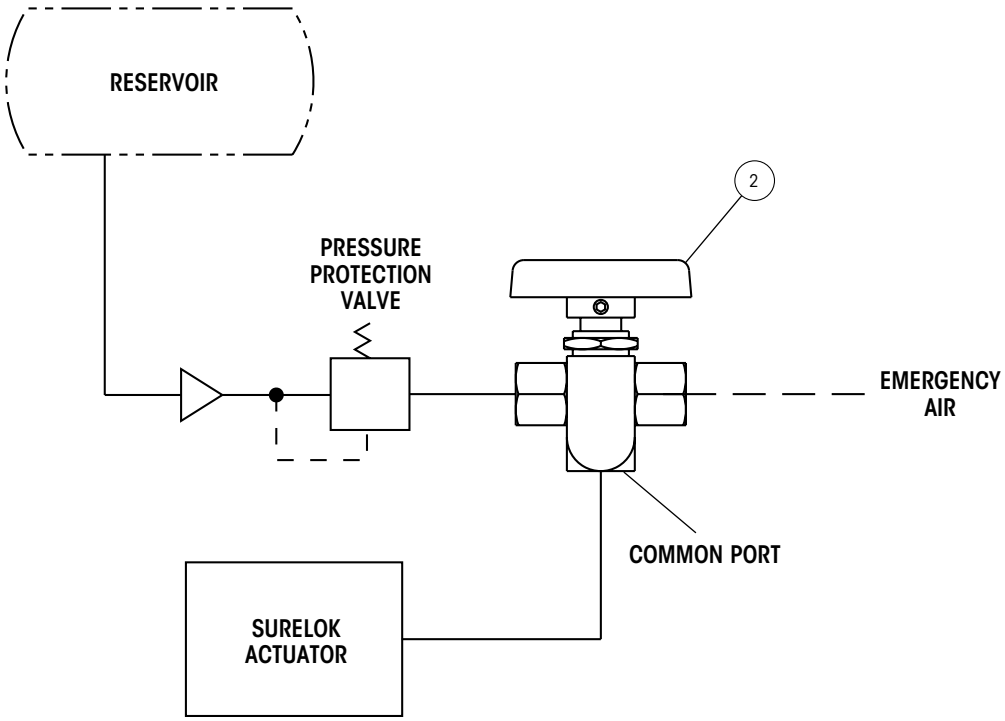

NOTES

*Call Hendrickson at **330.489.0045** or **866.RIDEAIR (743.3247)** for additional information.*

www.hendrickson-intl.com

TRAILER COMMERCIAL VEHICLE SYSTEMS
2070 Industrial Place SE
Canton, OH 44707-2641 USA
866.RIDEAIR (743.3247)
330.489.0045 • Fax 800.696.4416

Hendrickson Canada
250 Chrysler Drive, Unit #3
Brampton, ON Canada L6S 6B6
800.668.5360
905.789.1030 • Fax 905.789.1033

Hendrickson Mexicana
Circuito El Marqués Sur #29
Parque Industrial El Marqués
Pob. El Colorado, Municipio El Marqués,
Querétaro, México C.P. 76246
+52 (442) 296.3600 • Fax +52 (442) 296.3601

L1055 Rev E 10-17

Information contained in this literature was accurate at the time of publication. Product changes may have been made after the copyright date that are not reflected. © 2017 Hendrickson USA, L.L.C. All Rights Reserved

Printed in United States of America