Authorized Field Change

NAVISTAR®

AFC 17910

Date: November 2017

Subject File: Uptime Improvements

Subject: Update Instrument Cluster, Body Control Module (BCM), Light Control Module (LCM), Switch Pack Modules, Stalk Shifter Module, Inspect Chrome Grille and Aero Bumper Rock Screen.

Model: Certain International® LT™ Series and International® RH™ Series model trucks.
Start Date: 09 January 2017 End Date: 21 February 2017

DESCRIPTION

Multiple system module updates to mitigate false malfunction indicator light, inspect chrome grille. In addition, installation of rock screen retainer clip.

ELIGIBILITY

This procedure applies ONLY to vehicles marked in the International® Service Portal℠ with AFC 17910. Check and complete any other open campaigns also at this time.

TOOLS INFORMATION

Table 1. Tools Information

Tool Number	Tool Description
N/A	EZ-Tech® or EST with Diamond Logic® Builder Software

PARTS INFORMATION

Table 2. Parts Information

Part Number	Description	Quantity
4106286C1	U-Clip Fastener	1
4039860C93	Chrome Grille Assembly	1 (If Required)

© 2017 Navistar, Inc. All rights reserved. All marks are trademarks of their respective owners.

SERVICE PROCEDURE

WARNING: To prevent property damage, personal injury, and / or death, park vehicle on hard flat surface, turn the engine off, set the parking brake, and install wheel chocks to prevent the vehicle from moving in both directions.

WARNING: To prevent personal injury and / or death, always wear safe eye protection when performing vehicle maintenance.

WARNING: To prevent property damage, personal injury, and /or death, remove ground cable from negative terminal of main battery before disconnecting or connecting electrical components. Always connect ground cable last.

1. Park on flat surface.

2. Shift transmission to Park or Neutral and set parking brake.

3. Install wheel chocks.

DLB MODULE UPDATES

4. Ensure that current Health Report of the vehicle has been captured.

5. Launch Diamond Logic® Builder (DLB) software and ensure that the vehicle's VIN does not appear in the list of VINs on the Select tab. Delete the VIN if necessary.

NOTE: Use the Nexiq USB link or Nexiq USB Link 2 interface cable for these updates. Other interface cables may increase programming time or may not work at all.

6. With the ignition in the Key ON, Engine OFF position, connect to DLB and let it detect the vehicle's modules.

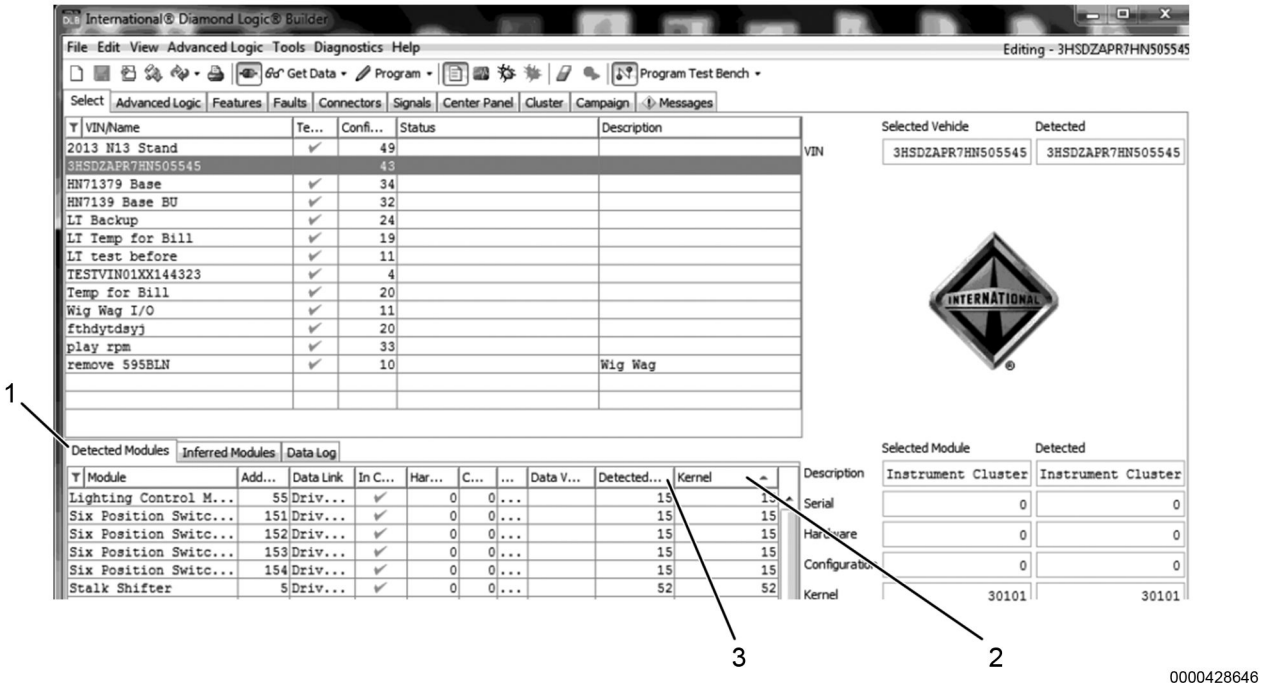

Figure 1. Detected Modules: Before Update

1. Detected Modules tab
2. Column headings
3. Detected and Kernel columns

NOTE: Only modules that are installed on the connected vehicle will show up on the Detected Modules tab.

NOTE: There may be as many as five switch packs installed on the vehicle. Ensure that all installed switch packs are detected.

NOTE: Vehicles equipped with Stalk Shifter: If stalk shifter is not communicating with the data link or in a non-programmable state before or after performing this update, remove the Transmission Shifter Fuse for 5 seconds, then reinstall to restore module communication.

7. Select the Detected Modules tab (Figure 1, Item 1) to see the kernel information for this vehicle.

8. If the Detected Kernel and Kernel columns are not displayed, enable their display by right clicking on any column heading (Figure 1, Item 2) and then selecting these columns in the right-click menu.

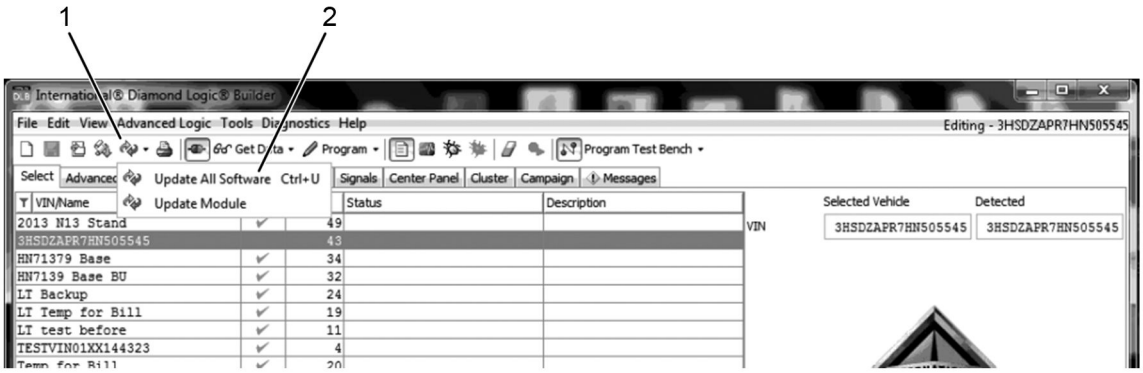

0000428647

Figure 2. Update All

1. Update All icon
2. Update All Software

9. Click the Update All icon in the toolbar (Figure 2, Item 1) and select the Update All Software option (Figure 2, Item 2). DLB will update the versions displayed in the Kernel column to the latest versions available.

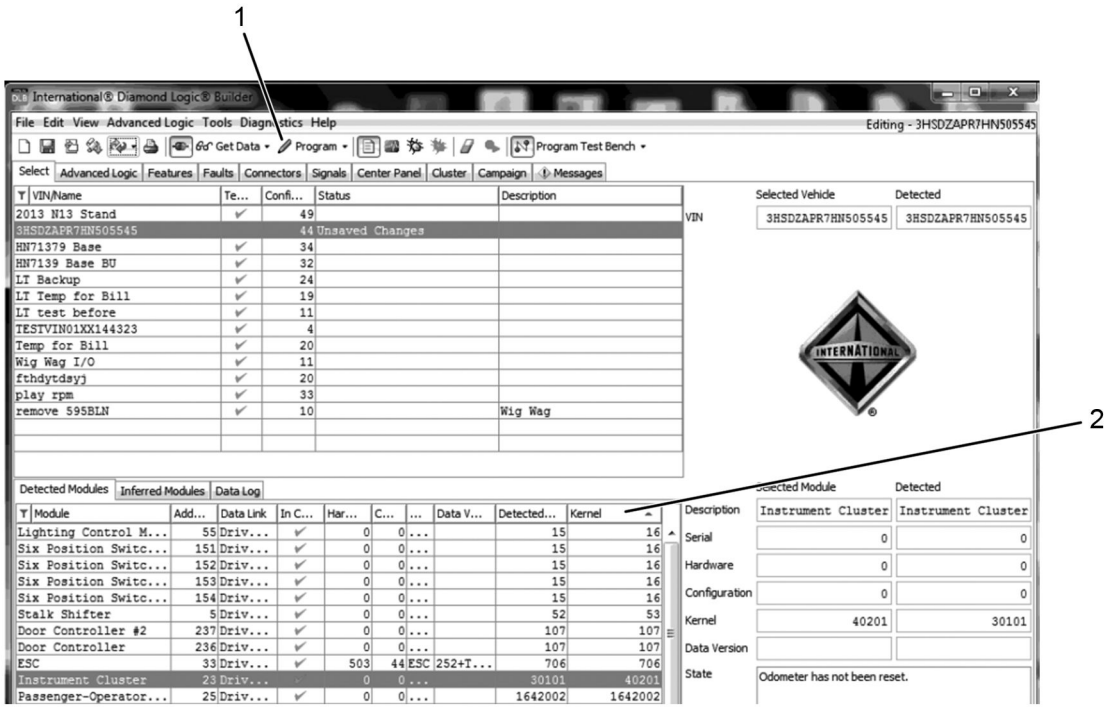

0000428643

Figure 3. Detected Modules: After Update

1. Program icon
2. Kernel column

NOTE: Depending on the number of modules to be programmed, programming could take as long as 60 minutes, during which time the headlights will turn on and off several times. Connecting a battery charger and / or disconnecting the headlights is recommended. Also ensure that your EZ-Tech® battery has sufficient charge to last for the entire procedure.

NOTE: Kernel versions shown in this document's figures are examples only. The actual kernel version that is current when an update is performed may vary.

10. Once the versions in the Kernel column (Figure 3, Item 2) have been updated, click the Program icon (Figure 3, Item 1) in the toolbar.

11. At this point, several messages regarding programming of the body controller may be displayed. Respond to these prompts in the same way you would during normal body controller programming.

12. Once programming begins, DLB will indicate programming status in the status bar at the bottom of the window. Programming may take up to 60 minutes, depending on how many modules are being updated.

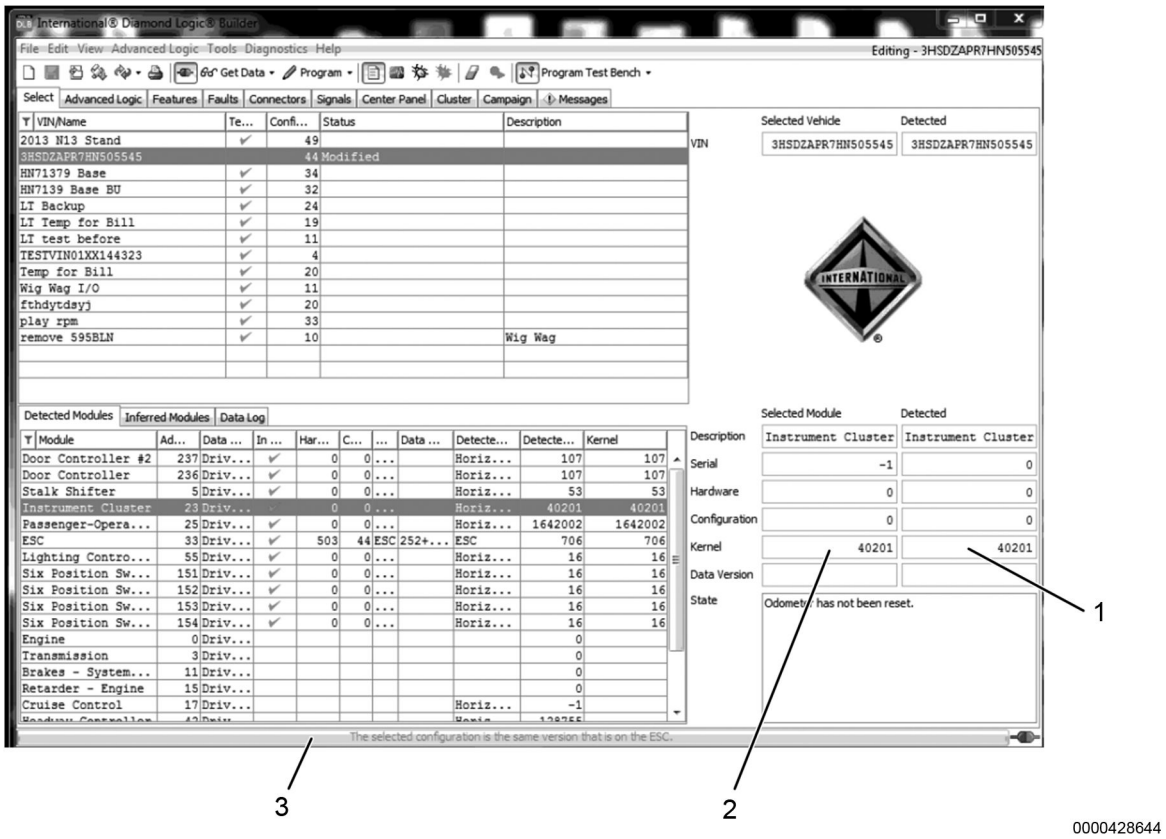

Figure 4. Programming Complete

1. Detected kernel version
2. Selected Module kernel version
3. Status bar

NOTE: During programming, there will not be any prompts that require a technician response. The technician does not need to be present and can perform other tasks while programming is underway.

NOTE: There may be pauses during the update process. Ensure that programming is complete before disconnecting the computer.

13. Verify that programming is complete by selecting each updated module. If the update has been finished for the selected module, the kernel version listed in the Selected Module column (Figure 4, Item 2) will match the version listed in the Detected column (Figure 4, Item 1). Additionally, the status bar at the bottom of the window (Figure 4, Item 3) will display “The selected configuration is the same that is on the ESC.”

14. Disconnect DLB from vehicle by clicking on Disconnect icon, switching vehicle ignition to Key OFF, Engine OFF position, and disconnecting the interface connector from the diagnostic port.

15. Reconnect interface connector to diagnostic port, switch vehicle ignition to Key ON, Engine OFF position and click DLB’s connect icon.

SERVICE PROCEDURE (CONT.)

16. Enter diagnostic mode.

17. Select the Faults tab.

18. Clear any DTCs listed. Refer to the Diamond Logic Builder User Guide for detailed instructions.

NOTE: You may have to invoke the Clear DTCs routine several time to clear all DTCs. Active DTCs will reappear and the issues causing them should be corrected before releasing the vehicle to the customer.

19. Disconnect DLB from vehicle by clicking on Disconnect icon, switching vehicle ignition to Key OFF, Engine OFF position, and disconnecting the interface connector from the diagnostic port.

LT™ CHROME GRILLE

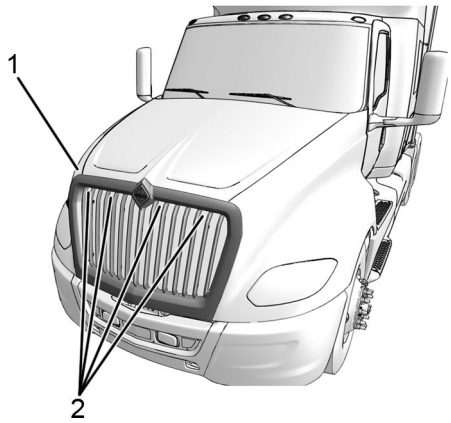

0000418920

Figure 5. Grille Mounting Bolts

1. Chrome grille
2. Grille bolt (4)

20. Remove four bolts (Figure 5, Item 2) holding grille. Retain bolts for assembly.

21. Remove grille from hood.

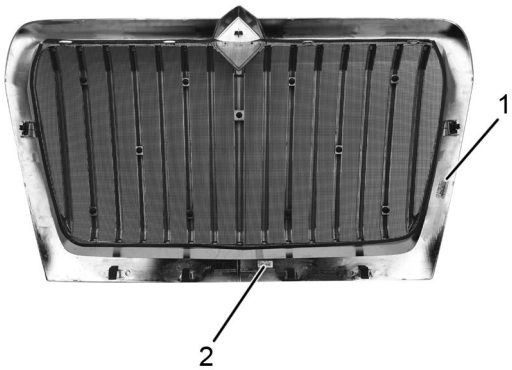

0000418919

Figure 6. Grille Part Number Label Locations

1. Supplier part number label
2. Navistar part number label

NOTE: Navistar and supplier part number UPC labels are located on the inside of the grille.

22. Locate Navistar part number label (Figure 6, Item 2) and / or the Supplier part number label (Figure 6, Item 1).

23. Proceed to either Step 24 to verify Navistar date code, or proceed to Step 25 to verify Supplier date code.

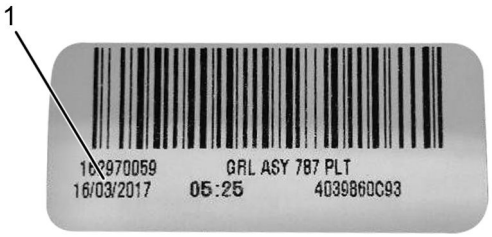

0000418921

Figure 7. Navistar Part Number Label Date Code

1. Navistar label date code (DD/MM/YYYY)

24. Verify date code (Figure 7, Item 1) on Navistar label (DD/MM/YYYY).
    a. If date code is between 02/01/2017 and 18/02/2017, proceed to Step 26.
    b. If date code is NOT between 02/01/2017 and 18/02/2017, proceed to Step 27.

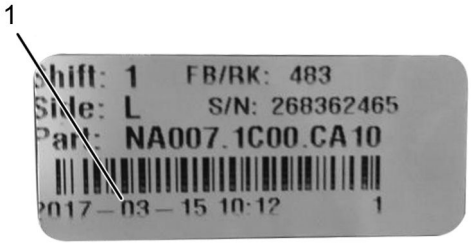

0000418922

Figure 8. Supplier Part Number Label Date Code

1. Supplier label date code (YYYY/MM/DD)

25. Verify date code (Figure 8, Item 1) on supplier label (YYYY/MM/DD).
    a. If date code is between 2017/01/02 and 2017/02/18, proceed to Step 26.
    b. If date code is NOT between 2017/01/02 and 2017/02/18, proceed to Step 27.

NOTE: Date codes must be verified prior to replacing the grille.

26. Install new grille; using a torque wrench, tighten four grille bolts (Figure 5, Item 2) to 53 - 62 lb-in (6 - 7 N•m).

27. Install original grille; using a torque wrench, tighten four grille bolts (Figure 5, Item 2) to 53 - 62 lb-in (6 - 7 N•m).

SERVICE PROCEDURE (CONT.)

BUMPER ROCK SCREEN

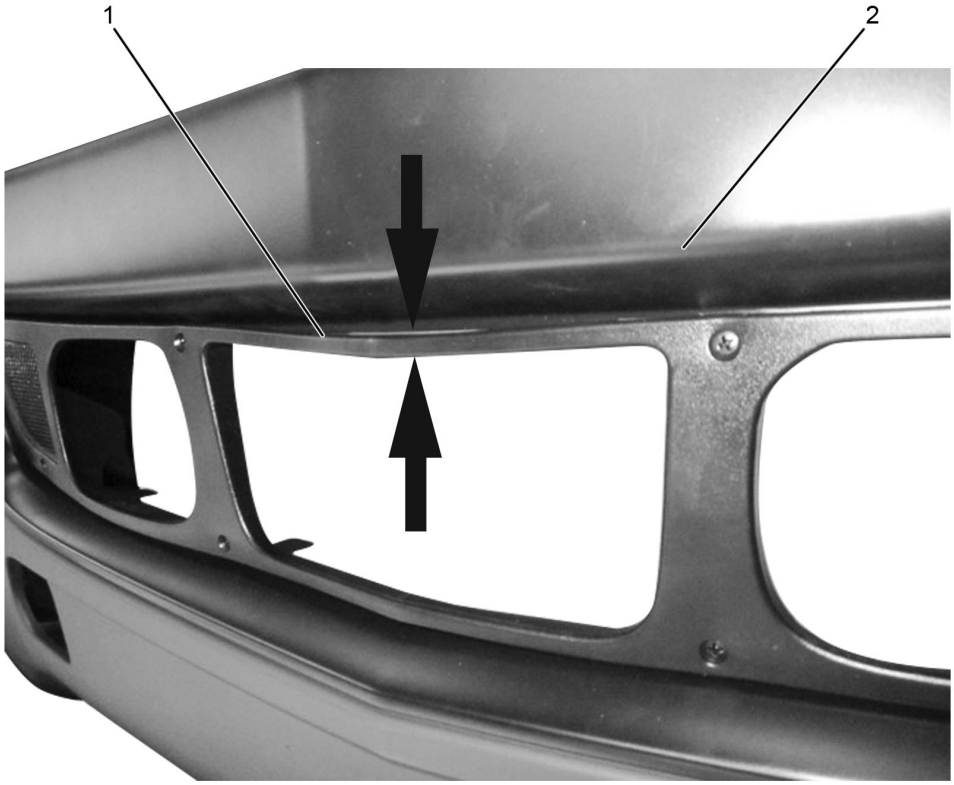

0000429400

Figure 9. Rock Screen Radar Frame (Bumper Exterior)

1. Bumper rock screen radar frame
2. Bumper applique

NOTE: Collision avoidance radar may malfunction or cause fault codes if rock screen radar frame blocks the radar signal.

28. Locate center of rock screen radar frame (Figure 9, Item 1) and bumper applique (Figure 9, Item 2).

0000429398

Figure 10. Rock Screen Radar Frame with U-Clip Fastener (Bumper Interior)

1. Rock screen radar frame
2. U-clip fastener
3. Bumper applique

29. Align and install U-clip fastener (Figure 10, Item 2) with retaining tab face up to top center area of rock screen radar frame (Figure 10, Item 1), securing radar frame to inside edge of bumper applique (Figure 10, Item 3).

30. Unlatch and open hood.

SERVICE PROCEDURE (CONT.)

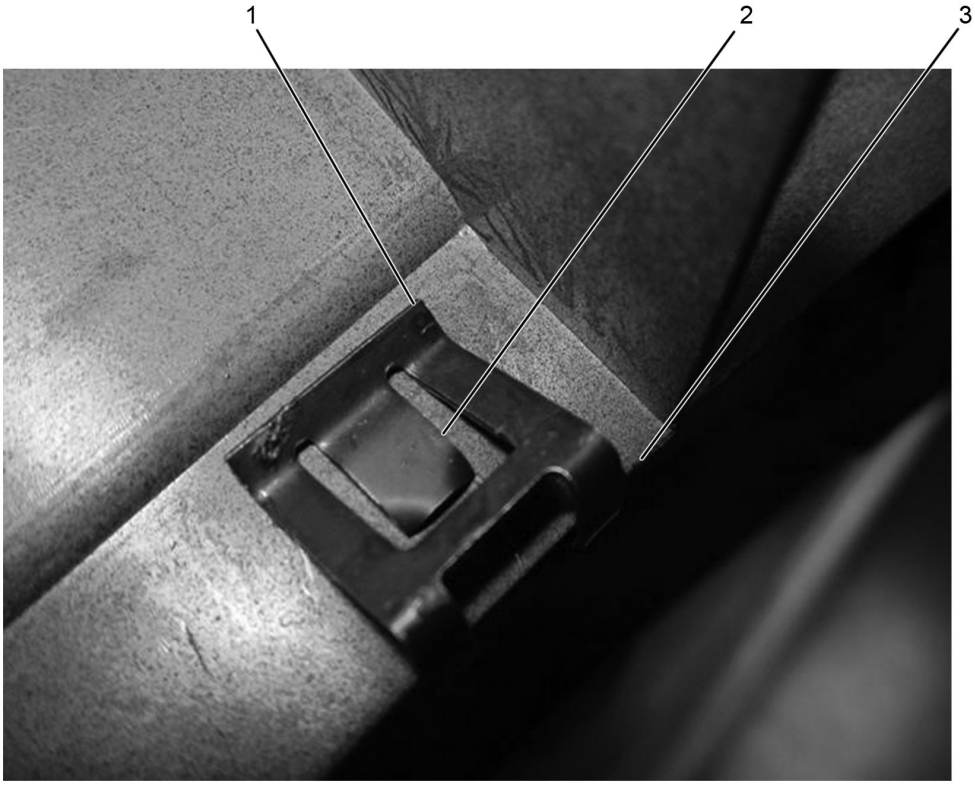

0000429399

Figure 11. U-Clip Fastener

1. U-clip fastener
2. Retaining tab
3. Bumper applique

31. Visually inspect the inside bumper to ensure U-clip fastener (Figure 11, Item 1) is oriented with retaining tab (Figure 11, Item 2) face up onto bumper applique (Figure 11, Item 3) and seated fully.

32. Close and latch hood.

33. Remove wheel chocks.

LABOR INFORMATION

Operation number must appear on all claims.

Table 3. Labor Information

Operation No.	Description	Time
A40-17910-1	Uptime Improvements	0.8 hr

ADMINISTRATIVE PROCEDURE

Expense is to be charged to Warranty. Claims are to be submitted in the normal manner, making reference to Authorized Field Change Number 17910.

Section 7 of the Warranty Policy and Procedures Manual contains further information related to the submission and processing of AFC / Recall claims.

As with all claim submissions, items acquired locally must be submitted in the “Other Charges” tab. The cost of any bulk items (such as a bag of cable tie straps, roll of wire, barrel of oil, or tube of silicone) should be prorated for the cost of the individual pieces / amount used during each repair.

To ensure this important improvement is made in a timely manner, all claims for 17910 activity must be submitted by 17 November 2018 or within the normal warranty period for the vehicle, if after 17 November 2018.

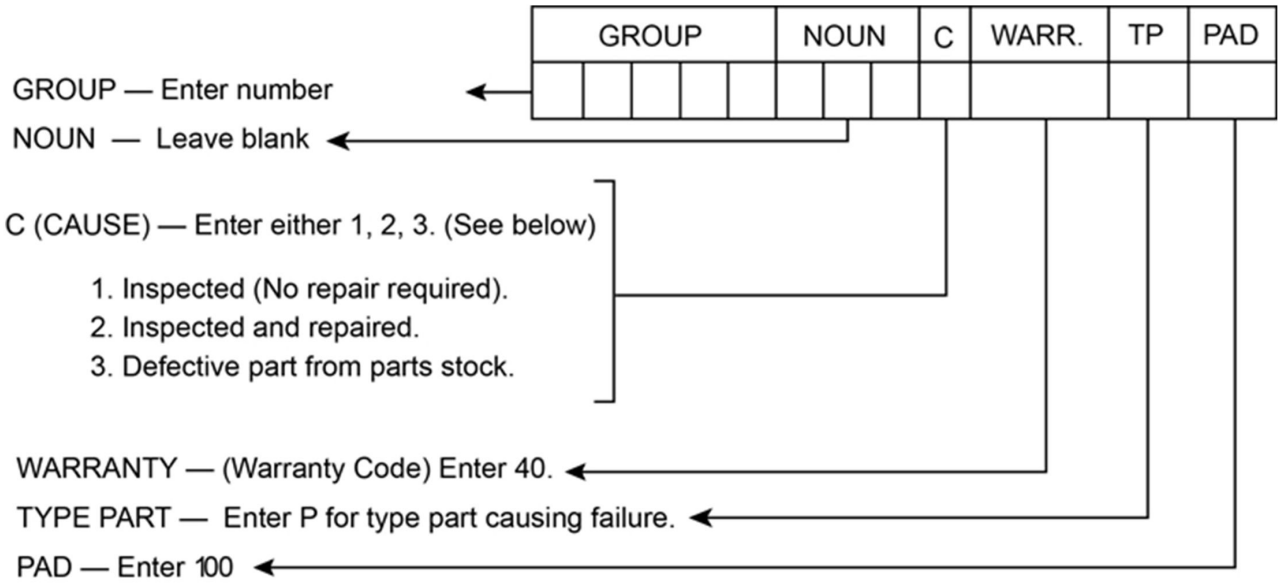

0000047910