Tech Article

TA0022: Transmission to Primary Oil Transfer

Reference	TA0022
Last Modified	2017-09-27
Models	2014: FLHP, FLHR, FLHR 103, FLHRC, FLHRSE, FLHTCU, FLHTCU TC, FLHTCUTG, FLHTK, FLHTK 103, FLHTK SHRINE, FLHTKSE, FLHTP, FLHX, FLHX SHRINE, FLHXS 2015: FLHP, FLHR, FLHRC, FLHTCU, FLHTCU TC, FLHTCUL, FLHTCUL TC, FLHTCUTG, FLHTK, FLHTK SHRINE, FLHTKL, FLHTKSE, FLHTP, FLHX, FLHXS, FLHXSE, FLRT, FLTRUSE, FLTRX, FLTRXS 2016: FLHP, FLHR, FLHRC, FLHTCU, FLHTCU TC, FLHTCUL, FLHTCUL TC, FLHTCUTG, FLHTK, FLHTK SHRINE, FLHTKL, FLHTKSE, FLHTP, FLHX, FLHXS, FLHXSE, FLRT, FLTRU, FLTRUSE, FLTRX, FLTRXS 2017: FLHP, FLHR, FLHRC, FLHRXS, FLHTCU, FLHTCUTG, FLHTK, FLHTK SHRINE, FLHTKL, FLHTKSE, FLHTP, FLHX, FLHXS, FLHXSE, FLRT, FLTRU, FLTRX, FLTRXS 2018: FLHP, FLHR, FLHRC, FLHRXS, FLHTCU, FLHTCUTG, FLHTCUTG ANV, FLHTK, FLHTK ANV, FLHTK SHRINE, FLHTKL, FLHTKSE, FLHTKSE ANV, FLHTP, FLHX, FLHX ANV, FLHXS, FLHXS ANX, FLHXSE, FLRT, FLTRU, FLTRX, FLTRXS, FLTRXSE
Category	Transmission

Description

During service intervals, customers or dealers may find oil level in the primary above the clutch cover opening. This also is accompanied by low transmission oil level.

Cause

This is occurring because oil is transferring from the transmission cavity to the primary cavity. Harley-Davidson has confirmed some vehicles show higher amounts of transfer than expected. While some oil transfer can occur, instances where 150 ml (5 fl oz) or more have transferred in less than 8,000 km (5,000 mi) should be reviewed per the direction.

Action

2014 - 2016 Vehicles

For Twin-Cam models, replace the oil seal (Part No. 12068) and sprocket shaft spacer (Part No. 24009-06).

2017 and Later Vehicles

Refer to Figure 1. Check the primary and transmission oil levels and adjust the oil volumes as needed. Verify oil levels again in 1,600 km (1,000 mi).

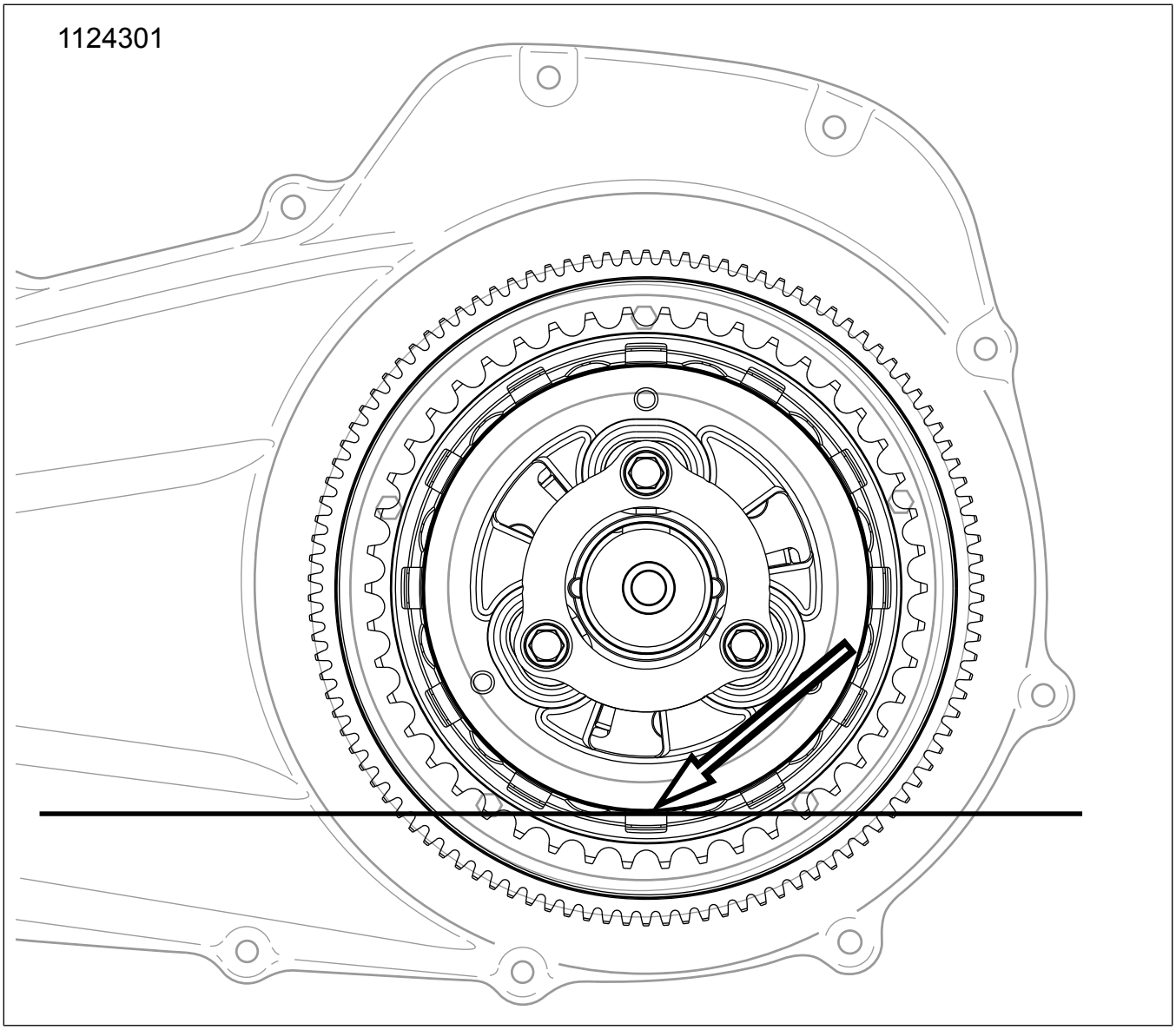

Figure 1. Primary Lubricant Level