TECHNICAL PROCEDURE

SURELOK® RIDE HEIGHT LOCK OPTION

SUBJECT: Installation Procedures

LIT NO: L715
DATE: February 2017 **REVISION:** E

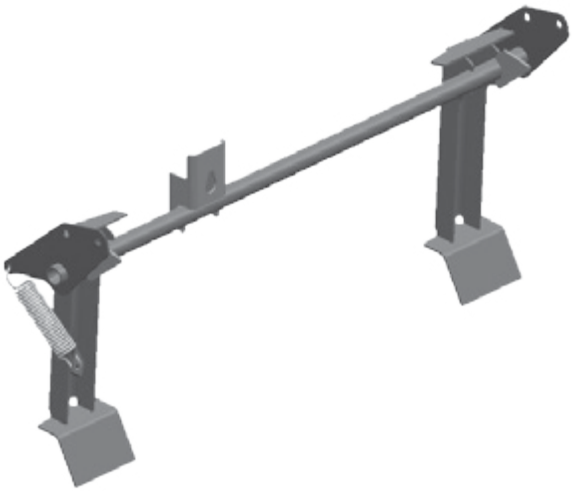

TABLE OF CONTENTS

Conventions Applied In This Document 2
General Service Notes 2
Introduction 5
Quick Reference Table 6
SECTION I: INSTALLING SURELOK® ON SLIDER SUSPENSIONS 7
Legacy slider/SURELOK versions. 7
ULTRAA-K® Slider Boxes 8
K-2® Slider Box SURELOK® Kits 13
SECTION II: INSTALLING SURELOK® ON NON-HENDRICKSON SUBFRAME 22
SECTION III: INSTALLING SURELOK® ON STATIONARY (NON-SLIDER) SUSPENSIONS 26
HT™ Series SURELOK® Applications 29
SECTION IV: RETROFITTING STANDARD SUSPENSION BEAMS 35
Narrow Suspension Beam Weld-On Beam Extensions 35
Wide Suspension Beam Weld-on Beam Extensions 38
Wide Suspension Beam BOLT-on Beam Extensions 40
SECTION V: SURELOK® PLUMBING SCHEMATICS 41
SECTION VI: CHECKING SURELOK® OPERATION 43
Appendix A: WELDING DETAILS 44

HENDRICKSON®
The World Rides On Us®

CONVENTIONS APPLIED IN THIS DOCUMENT

This section explains the techniques used in this document to convey important information, safety issues, how to contact Hendrickson and how to apply hyperlinks.

EXPLANATION OF SIGNAL WORDS

Hazard signal words (such as DANGER, WARNING or CAUTION) appear in various locations throughout this publication. Information accented by one of these signal words must be observed at all times. Additional notes are utilized to emphasize areas of procedural importance and provide suggestions for ease of repair. The following definitions comply with ANSI Z535.4 and indicate the use of safety signal words as they appear throughout the publication.

⚠**DANGER: INDICATES IMMEDIATE HAZARDS WHICH WILL RESULT IN SEVERE PERSONAL INJURY OR DEATH.**

⚠**WARNING: Indicates hazards or unsafe practices which could result in severe personal injury or death.**

⚠**CAUTION: Indicates a hazardous situation which, if not avoided, could result in minor or moderate injury.**

NOTICE: Indicates hazards or unsafe practices which could result in damage to machine or equipment.

IMPORTANT: An operating procedure, practice or condition that is essential to emphasize.

⚠ Safety alert symbol used to indicate a condition exists that may result in personal injury or harm to individuals. It must be applied to DANGER, WARNING and CAUTION statements, which emphasize severity.

LINKS

Links are identified by a dark grey line under the linked text. Internal links allow the reader to jump to a heading, step or page in this document. External links open the website or document referenced.

GENERAL SERVICE NOTES

IMPORTANT: Special attention should be paid to the information included in EXPLANATION OF SIGNAL WORDS.

Before you begin:
Read, understand and comply with:

- All instructions and procedures.
- All signal word (CAUTION, WARNING and DANGER) statements to help avoid personal injury or property damage.
- Company's maintenance, service, installation and diagnostic practices.
- Vehicle manufacturer's safety instructions when working on the vehicle.
- Vehicle manufacturer's instructions for recommended practices not described in this manual.
- Local safety regulations.

DURING SERVICE:

- Work must be carried out by trained personnel.
- Sudden release of parking springs (e.g. the spring brake part of the brake chamber or the brake return spring) may cause injury.
- Use recommended tools only.
- Before releasing trailer back into service, perform operational checks and test the trailer to ensure brakes are working correctly.

Hendrickson reserves the right to make changes and improvements to its products and publications at any time. Consult the Hendrickson website (www.hendrickson-intl.com) for the latest version of this manual.

IMPORTANT SAFETY NOTICES

Proper installation, maintenance, service and repair is important to the reliable operation of the suspension system. The procedures recommended by Hendrickson and described in this publication are methods of performing inspection, maintenance, service and repair.

The warnings and cautions should be read carefully to help prevent personal injury and to assure proper methods are used. Improper maintenance, service or repair can cause damage to the vehicle and other property, personal injury, an unsafe operating condition and potentially void the manufacturer's warranty.

Carefully read, understand and follow all safety related information within this publication.

⚠WARNING: DO NOT modify or rework parts. Use ONLY Hendrickson-authorized replacement parts. Use of modified or non-genuine replacement parts not authorized by Hendrickson may not meet Hendrickson's specifications. It can also result in failure of the part, loss of vehicle control and possible personal injury or property damage. Do not modify parts without written authorization from Hendrickson.

⚠WARNING: Always wear proper eye protection and other required personal protective equipment (PPE) when performing vehicle maintenance, repair or service. Follow federal, state and local safety regulations as appropriate.

⚠WARNING: Solvent cleaners can be flammable, poisonous and cause burns. To help avoid serious personal injury, carefully follow the manufacturer's product literature and the following procedures:

- **Wear proper eye protection.**
- **Wear clothing that protects your skin.**
- **Work in a well-ventilated area.**
- **DO NOT use gasoline or solvents that contain gasoline. Gasoline can explode.**
- **Hot solution tanks or alkaline solutions must be used correctly. Follow the manufacturer's recommended instructions and guidelines carefully to help prevent personal accident or injury.**

⚠WARNING: The following precautions and considerations should be applied when handling brake lining:

- **Compressed air or dry brushing should never be used for cleaning brake assemblies or work areas.**
- **Follow applicable shop, local, state and federal safe practices for working with and disposal of brake lining materials.**
- **Hendrickson recommends that workers doing brake work should take steps to minimize exposure to airborne brake lining particles. Proper procedures to reduce exposure include:**
  - **Working in a well-ventilated area,**
  - **Segregation of areas where brake work is done,**
  - **Use of local filtered ventilation systems or use of enclosed cells with filtered vacuums.**
- **Material Safety Data Sheets (MSDS) on this product, as required by OSHA, are available online from Hendrickson at www.hendrickson-intl.com/trailerlit.**

⚠CAUTION: A mechanic using a service procedure or tool has not been recommended by Hendrickson must first satisfy himself that neither his safety nor the vehicle's safety will be jeopardized by the method or tool selected. Individuals deviating in any manner from the provided instructions assume all risks of consequential personal injury or damage to equipment.

NOTICE: When welding to or on the axle, take every caution to prevent bearing damage. When grounding welding equipment to axle, prevent current from passing through the wheel bearings.

A connection that places a wheel bearing between the ground cable connection and the weld area can damage the bearing by electric arcing.

Automatic or electric dump controls are not approved for use with Hendrickson's SURELOK® ride height lock system.

CONTACTING HENDRICKSON

Contact Hendrickson Trailer Technical Services for technical assistance as needed. To do so, several options are available. Technical Services must be contacted before performing any warranty related service.

Prior to contacting Technical Services, it is best to have the following information about the vehicle and Hendrickson suspension available (all that apply):

- Suspension ID Tag information (Refer to Hendrickson literature number L977 *Trailer Suspension and Axle ID Guide*, page 2 for tag location and details):
  - Suspension model number
  - Suspension serial number
  - Approximate number of suspension miles
- VIN plate data. Refer to trailer OEM manual for VIN plate location.
  - Trailer Type (van, reefer, flat bed, etc.)
  - Manufacturer
  - VIN (vehicle identification number)
  - In-service date [1]
- If applicable, description of the system problem, part number and/or part description of the reported non-functioning part.
  - Date of problem
  - Where applicable: location of problem on suspension / trailer (e.g., roadside, front axle, rear axle, rear, etc.)
  - Symptoms-
    - » Systems, components or function affected by problem.
    - » When does problem occur?
    - » How often does the problem occur?
    - » Etc.
- Any troubleshooting and/or measurements have been performed?
- Digital photos of suspension and damaged areas.
- Special application approval documentation (if applicable).

[1] If the in-service date is unknown or not available, the vehicle date of manufacture can be substituted.

PHONE

Contact Hendrickson directly in the United States at **866**-RIDEAIR (**743-3247**). From the menu, select:

- **Technical Services**/Warranty for technical information.
- Other selections include:
  - **Aftermarket Sales** for replacement parts information and ordering.
  - **Original Equipment Sales** for parts inquiries and ordering for trailer manufacturers.

EMAIL

For **H**endrickson **T**railer **T**echnical **S**ervices, use the following e-mail address:

HTTS@Hendrickson-intl.com

RELATIVE LITERATURE

If you suspect your version of this or any other Hendrickson manual is not "up-to-date", the most current version is free online at:

www.Hendrickson-intl.com/TrailerLit

Available Hendrickson documentation can be viewed or downloaded from this site.

All Hendrickson online documentation is in PDF format that requires PDF reader software to open. A free application is downloadable from Adobe at http://get.adobe.com/reader/.

Other relative literature may include:

NAME	DESCRIPTION
B31	*Suspension Torque Specifications*
L484	*SURELOK® Warning Decal*
L498	*SURELOK Operator's Manual*
L583	*Comprehensive Warranty Statement*
L578	*Preventive Maintenance Guide*
L718	*SURELOK Component Update*
L1055	*SURELOK Parts List*
L1074	*Slicer Suspension Information*

Table 1: Relative literature

PREPARING TRAILER FOR SERVICE

NOTE: DO NOT service a suspension or any components that is under warranty without first contacting Hendrickson Technical Services. Refer to CONTACTING HENDRICKSON for details.

⚠**WARNING: To prevent serious eye injury, always wear safety glasses when performing trailer maintenance and service.**

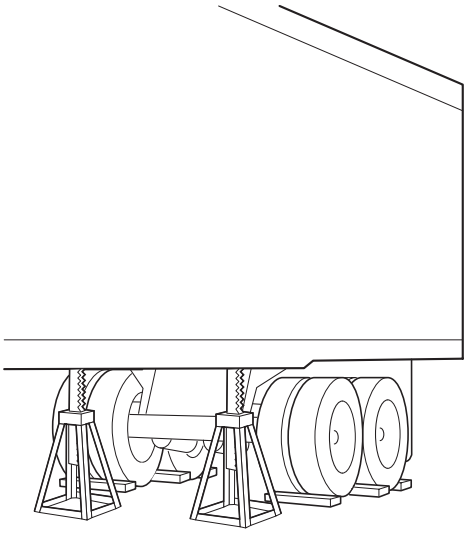

Figure 1: Trailer preparation

Before beginning any work on a trailer suspension system, the following steps help ensure conditions are safe. Refer to GENERAL SERVICE NOTES on page 2.

1. **Park** the trailer on a level, debris-free surface.
2. **Set** the trailer parking brakes.
3. **Chock** the wheels of an axle not being raised to prevent the trailer from moving.
4. **Exhaust** the air from the trailer suspension.

If required during service:

5. **Release** the trailer parking brakes.
6. Using a jack, **raise** trailer and/or axle until wheels clear the work surface.
7. **Support** the raised trailer with safety stands.

⚠**WARNING: Do not work under a trailer supported only by jacks. Jacks can slip or fall over, resulting in serious personal injury. Always use safety stands to support a raised trailer.**

INTRODUCTION

Since its introduction in April 1996, SURELOK® has undergone several refinements to reduce weight and optimize the way it is attached to the suspension. SURELOK can be installed on slider suspensions, stationary or fixed (non-slider) suspensions and high control suspensions. Because SURELOK can be installed on virtually every model of Hendrickson suspension, several installation drawings, procedures and requirements are presented on the following pages.

Although a variety of SURELOK kits exist to support various Hendrickson suspension models, installation is similar for suspensions of the same suspension beam and/or air actuator. To begin:

1. **Refer to** the QUICK REFERENCE TABLE on page 6 and locate the applicable suspension model.
2. **Check** to ensure the applicable SURELOK kit is correct for the suspension model.
   A. **If correct**, go to the "Starting Page" listed in the QUICK REFERENCE TABLE and start the procedure.
   B. **If not correct**, refer to CONTACTING HENDRICKSON on page 4.

NOTE: For the purpose of consolidation, like procedures from the previous revisions have been combined. When viewing electronically, the included hyperlinks can be used to jump between procedures (Sections) and sub-procedures. Otherwise, go to the page number listed when instructed.

SURELOK ID TAG

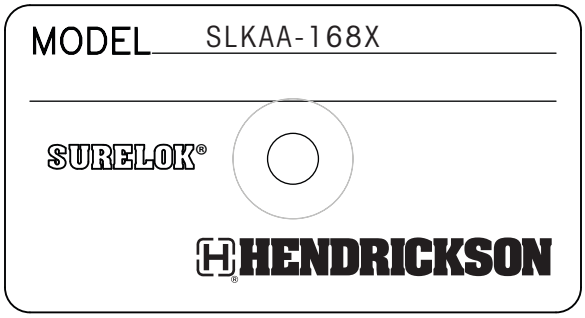

Figure 2: SURELOK ID tag sample

A SURELOK ID tag (Figure 2) is fastened to one of the support arms. To decode the model number, refer to the applicable installation drawing listed in the QUICK REFERENCE TABLE.

QUICK REFERENCE TABLE

SUSPENSION			SURELOK® TYPE				SURELOK KIT	INSTALLATION DRAWING	MAXIMUM LOADING (LBS.)	STARTING PAGE
Model	Type	High Control	Ready Beams	Beam Extensions		Actuator Type				
VANTRAAX®	HKANT HKA180[1]		✔			Air Spring	SLKP	D-24874	46,000	page 14
				Weld-on	page 35		SLKS[4]	D-27654		
	HKAT HKA200C[1]		✔				SLKO[4]	D-24873	52,900	
				Bolt-on	page 40	Brake Chamber	SLKF[4]	D-22488		page 18
ULTRAA-K®	UTKNT		✔			Air Spring	SLKAB	D-36132	46,000	page 9
				Weld-on	page 35		SLKAA	D-35024		
INTRAAX®	AANT		✔			Brake Chamber	SLKY	D-28638	52,900	page 26
				Weld-on	page 35		SLKT	D-28367		
		✔	✔				SLKX	D-28637	46,000	
		✔		Weld-on	page 35		SLKW	D-28636	52,900	
		✔	✔			Air Spring	SLKZ	D-31347		page 22
	AAT AA230T AA250T			Bolt-on	page 40	Brake Chamber	SLKF[4]	D-22488	52,900	page 26
		✔		Bolt-on	page 40		SLKV[4]	D-28635		
HT™ Series	HT190T HT230T		✔			Brake Chamber	SLKK[2]	D-23317	46,000	page 29
				Weld-on	page 38		SLKA	D-21526		
	HT250US		✔				SLKU[3]	D-27889	52,000	page 32
HC	HT190T HT230T	✔	✔			Brake Chamber	SLKL[2]	D-23624	46,000	page 29
				Weld-on	page 38		SLKQ	D-25981		
HTHKA HT on a K-2® Slider	HT190T HT230T		✔			Air Spring	SLKN	D-24872		page 14
				Weld-on	page 38		SLKR	D-26262		
			✔			Brake Chamber	SLKC[1]	D-21896		page 7
				Weld-on	page 38		SLKM[1]	D-23747		
HTHSA[1] HT on a 10" HS Slider	HT190T HT230T		✔			Brake Chamber	SLKB[1]	D-21831		
				Weld-on	page 38		SLKA[1]	D-21526		

1 Legacy product, no longer sold as new. Replacement parts may still be available. Refer to L1055 *SURELOK Parts List* or CONTACTING HENDRICKSON on page 4 to for more information and details.
2 Intended for use with HT -600 series suspensions.
3 SURELOK support arm assembly is installed above the axle.
4 Not compatible for suspensions with Air Disc Brakes (ADB)

SECTION I: INSTALLING SURELOK® ON SLIDER SUSPENSIONS

LEGACY SLIDER/SURELOK VERSIONS.

The information in this document reflects current updates to slider box and SURELOK design changes. Procedures apply to both legacy and current components and hardware that are compatible with current products available from Hendrickson Trailer Commercial Vehicle Systems.

HS SLIDER BOXES

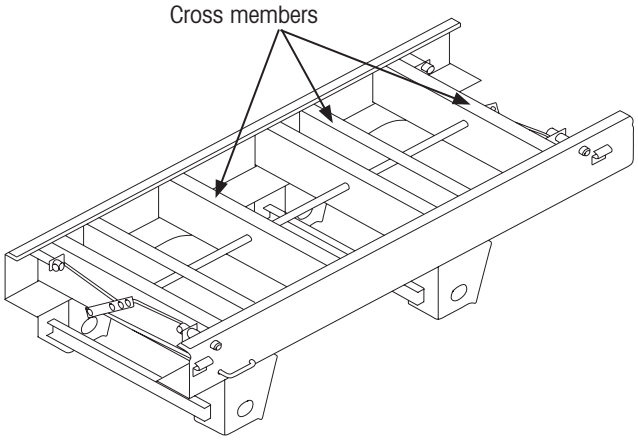

Figure 3: HS slider box

The HS slider box (Figure 3) is distinguished by the orientation of its crossmembers in a ladder-like arrangement. HT™ Series HT190T and HT230T suspension types were mounted on this slider box which is no longer available from Hendrickson. However, aftermarket parts are still available for SURELOK kits **SLKA** and **SLKB**. Refer to Hendrickson literature number L1055 SURELOK Parts List. Installation drawings are available on request by CONTACTING HENDRICKSON.

K-2® SLIDER BOXES

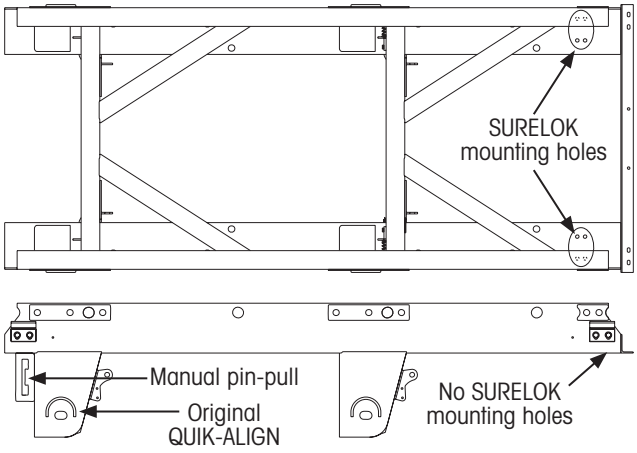

Figure 4: Older K-2 slider box

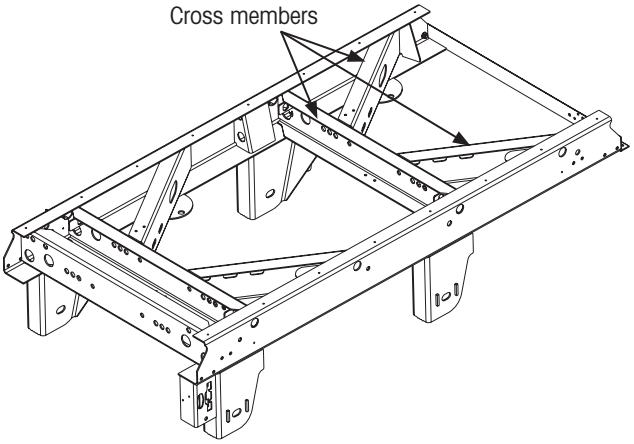

Figure 5: Newer K-2® slider box

The K-2 slider boxes; old (Figure 4), newer (Figure 5) and current (Figure 6); are distinguished by the orientation of their crossmembers arranged to form two letter K's.

Older K-2 slider boxes have SURELOK mounting holes in the slider rail bottom flange (Figure 4). SURELOK (kit **SLKC** and **SLKM**) is bolted onto the bottom of the slider box, similar to SURELOK kit SLKF. Like SLKF, these SURELOK kits include a brake chamber actuator (see Figure 28 on page 19). Although installation procedures for these legacy kits have been excluded in this revision, replacement parts may still be available. Refer to Hendrickson literature number L1055 SURELOK Parts List. Installation drawings are available on request by CONTACTING HENDRICKSON.

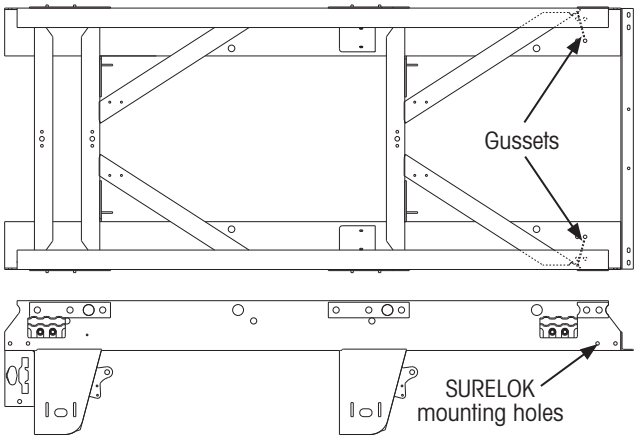

Figure 6: Current K-2® slider box

The current K-2® slider box (Figure 6) has SURELOK® mounting holes in the slider frame side rails. If using a newer K-2 slider box, the SURELOK kit will bolt to the sides of the slider box.

NOTE: Some newer K-2 slider boxes may also have SURELOK mounting holes in the slider rail bottom flange, but the addition of a gusset has made these mounting holes unusable.

Current SURELOK kits are compatible with the newer K-2 slider box which features an air spring actuator.

ULTRAA-K® SLIDER BOXES

This latest Hendrickson trailer slider box has been available since 2014. It includes mounting holes and welded nuts for SURELOK assembly (Figure 7).

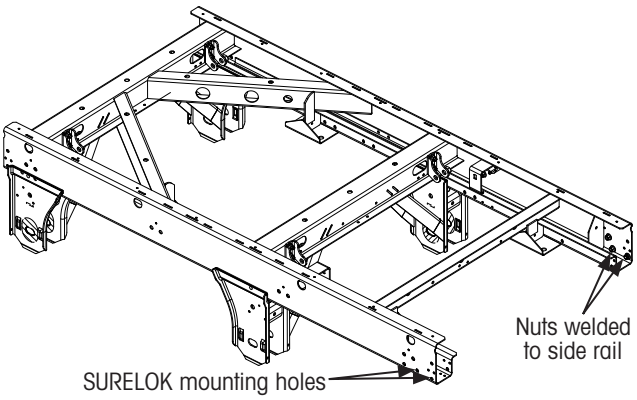

Figure 7: ULTRAA-K® slider box

Figure 8 shows an exploded view of components included in the SURELOK kits for ULTRAA-K air slider suspension systems. These SURELOK kits are installed similar to the current SURELOK kits for VANTRAAX K-2 slider boxes. If used, beam extensions (not shown in Figure 7) will also install similar to the VANTRAAX K-2 slider boxes.

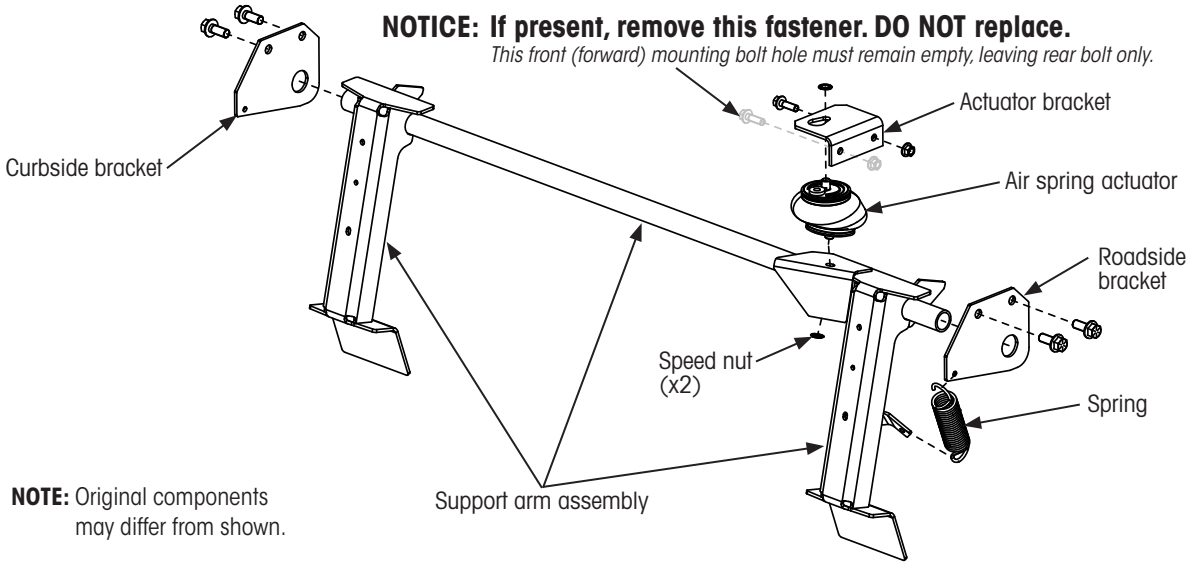

Figure 8: SLKAA (excluding beam extensions) and SLKAB kit components

ULTRAA-K® SURELOK® KITS

ULTRAA-K and VANTRAAX® SURELOK installation is similar, but there are design differences.

SURELOK installation kits for ULTRAA-K® UTKNT 40K suspension models include **SLKAA** (with beam extensions) and **SLKAB**. With the exception of the beam extensions, installation is the same for both kits. Refer to applicable SURELOK installation drawing[1] for more details.

PREPARATION

1. **Position** suspension slider in the middle of the body rail assemblies. This will provide ample working room for the technician.
2. **Ensure** the trailer parking brakes are set and trailer remains at ride height. This will remove the air from the actuator and allow existing support arm assembly, if installed, to be in the engaged position during this procedure.

⚠**WARNING: STAY CLEAR of the trailer during brake operation. Support arm assembly movement is automatically controlled by applying or releasing parking brakes. This can cause severe personal injury.**

INSTALLING THE WELD-ON REAR SUSPENSION BEAM EXTENSIONS (KIT SLKAA ONLY)

If installing kit **SLKAA** with weld-on beam extensions (Figure 63 on page 35), refer to NARROW SUSPENSION BEAM WELD-ON BEAM EXTENSIONS on page 35 for installation procedures on suspension models that have narrow standard-length (short) rear suspension beams.

With beam extensions installed or installing SURELOK kit SLKAA, install the support arm assembly and hardware.

[1] Applicable installation drawings are included with each SURELOK kit and supersede information in this document. For the drawing number, refer to QUICK REFERENCE TABLE on page 6. If unavailable, refer to CONTACTING HENDRICKSON on page 4.

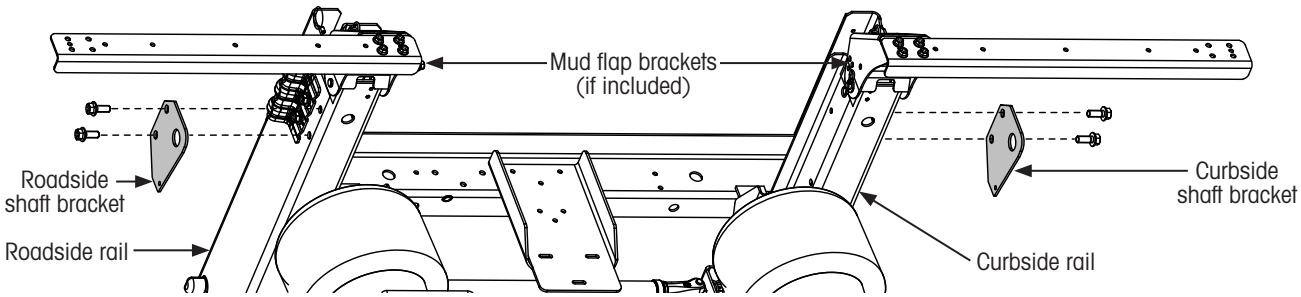

Figure 9: Slider shaft bracket installation

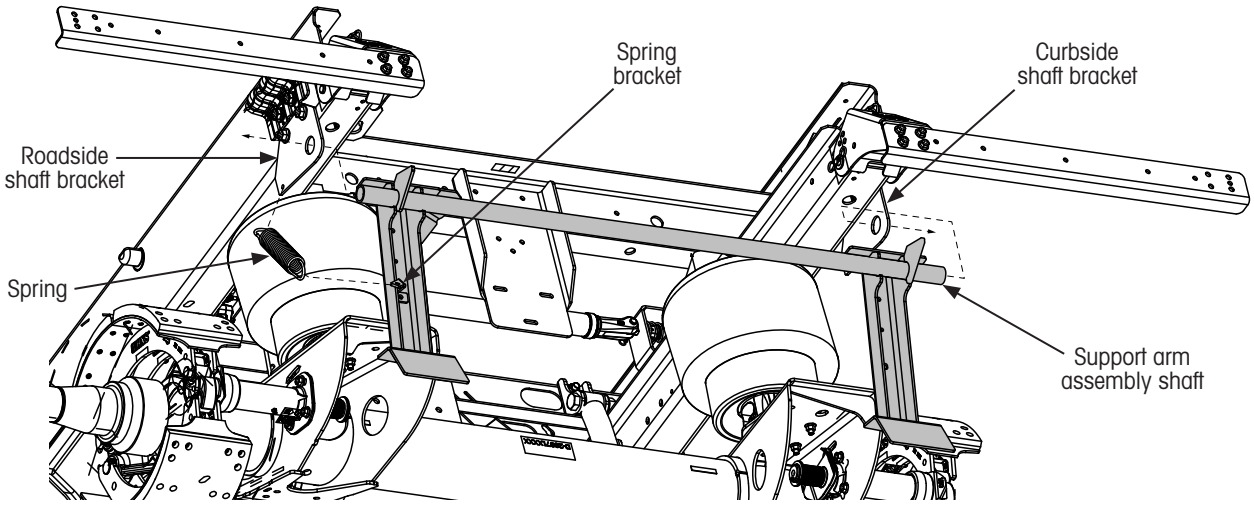

Figure 10: Support arm assembly installation

INSTALLING SUPPORT ARM ASSEMBLY

NOTICE: For best results, follow the steps in this procedure in the order specified. Refer to installation drawing for more details[1].

1. **Install** roadside and curbside shaft brackets (Figure 9) using 1/2-inch flange bolts provided with the kit. **Loosely install** bolts to allow brackets to move freely during the next step.

NOTE: Roadside and curbside brackets are identical and interchangeable.

IMPORTANT: **DO NOT** tighten the 1/2-inch flanged bolts at this time. The brackets must be loose to install the support arm assembly in the following steps.

2. **Insert** one end of spring (Figure 10) through spring bracket hole on support arm assembly.

3. **Lift** roadside end of the support arm assembly, with attached spring, to roadside bracket and Insert the other end of spring into spring hole of the roadside bracket (Figure 11).

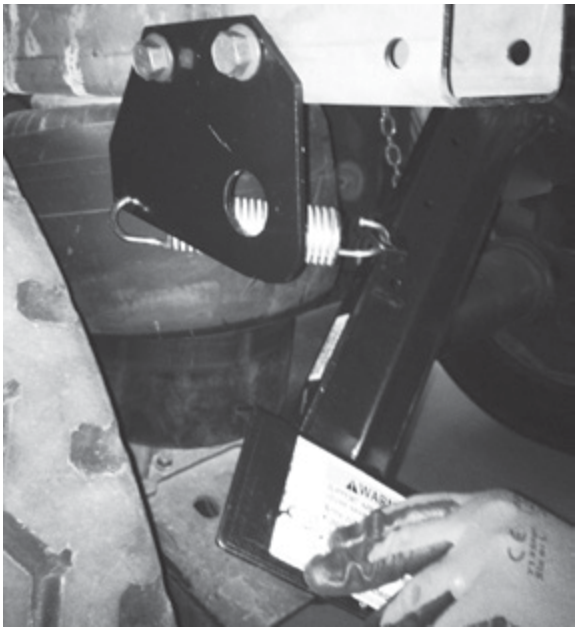

Figure 11: Arm raised above rail for spring installation

NOTE: To gain access and attach the spring in Step 3, the top of the roadside arm on the support arm assembly (Figure 11) must be raised up above the slider rail.

[1] Applicable installation drawings are included with each SURELOK kit and supersede information in this document. For the drawing number, refer to QUICK REFERENCE TABLE on page 6. If unavailable, refer to CONTACTING HENDRICKSON on page 4.

4. **Insert** roadside end of the support arm assembly shaft (Figure 10) into roadside bracket.

5. **Repeat** Step 4 for the curbside.

6. **Snug** all four shaft bracket bolts, but allow movement for adjusting the shaft brackets.

NOTE: At this time, spring tension should be holding the roadside support arm top front edge against the slider rail (Figure 12).

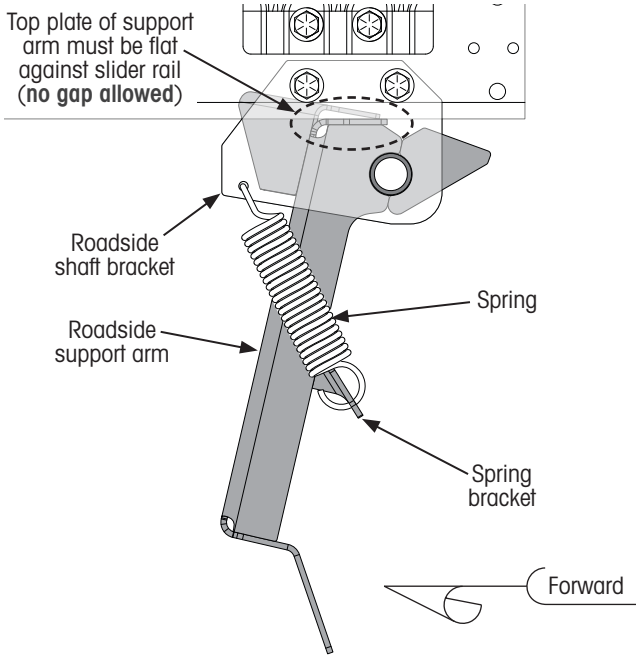

Figure 12: Verifying support arm assembly position

7. To adjust roadside shaft bracket, **simultaneously**:
   A. **Pull** roadside support arm rearward and **lift** shaft up so the top of the support arm is flat against the slider rail (Figure 12).
   B. **Tighten** both roadside bracket flanged bolts.

8. **Repeat** Step 7 for adjusting curbside shaft bracket.

9. **Verify** the top surface of the support arms are flat against the underside bottom surface of the slider rails and there is **no gap** (Figure 12) between the top of each support arm and the slider rail.

10. **Tighten** all four flanged bolts to 100±10 ft. lbs. (140±9 Nm) of torque.

IMPORTANT: While engaged, the shaft of the support arm assembly must not assume any load from the trailer. To avoid this, verify there is **no gap** (Figure 12) between the top of each support arm and the slider rail bottom surface.

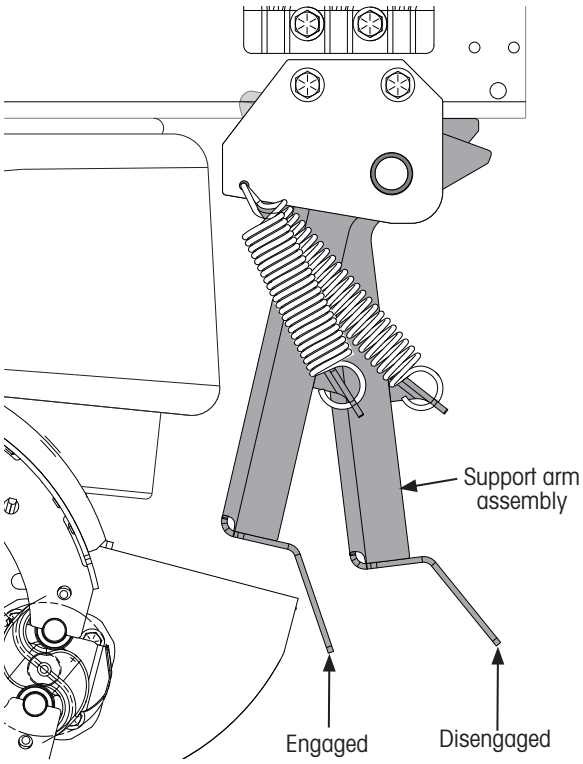

Figure 13: Checking support arm assembly movement

11. **Manually move** support arm assembly to ensure support arms move freely between disengaged and engaged positions without binding.
    A. **If binding or does not move freely**, loosen flanged bolts for both side brackets and return to Step 7.
    B. **If no binding** occurs, proceed to the next procedure.

IMPORTANT: When equipped with SURELOK®, a suspension must be operated as close as possible to its designed ride height. Suspension ride height is the primary consideration for optimal SURELOK performance (not the amount of clearance between the support arms and the suspension beam). When the suspension is operated at its designed ride height, the support arms will have the proper clearance from the suspension beams. For complete ride height details, refer to Hendrickson publications L388 *Ride Height Settings* and L459 *Checking Trailer Ride Height*.

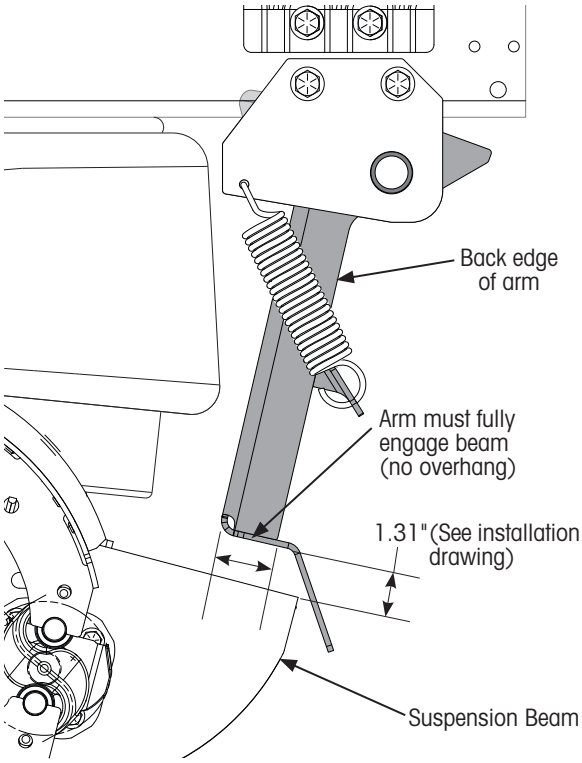

Figure 14: Checking arm-to-beam clearances

12. With the suspension at the designed ride height, **measure** the distance from the top of the beam to the bottom of the arm (Figure 14). An acceptable measurement range is 1.31" (33 mm).

IMPORTANT: The purpose of this measurement is to check the initial installation. Because this distance will vary in service due to the dead band range of the height control valve, it is not intended to be a field inspection.

NOTICE: To avoid suspension damage, DO NOT drive away with the SURELOK® arms still engaged. Wait until the trailer air system is completely aired-up to ride height.

If the measurement is not within the acceptable range, check to make sure the suspension ride height is set correctly and the SURELOK kit is correctly installed thus far. If it is still outside of the acceptable range, refer to CONTACTING HENDRICKSON on page 4. They will determine if this measurement range is acceptable for your suspension.

13. Check the arm position relative to the beam (Figure 14). The arm must have full engagement with the beam. In other words, the back edge of the arm must be entirely positioned over the top surface of the beam (ignore the beam side surfaces when checking arm position).

INSTALLING AIR SPRING ACTUATOR

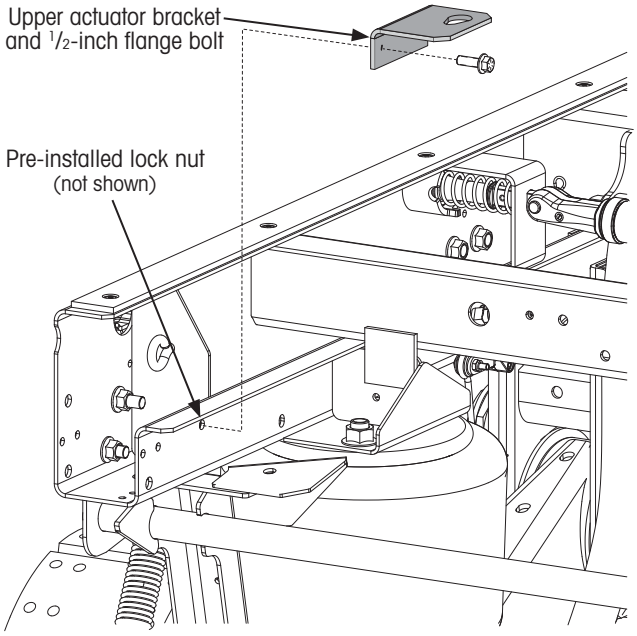

Figure 15: Installing actuator bracket

NOTICE: Prior to December 2015, the SURELOK actuator upper mounting bracket included two mounting holes. In Figure 15, the forward actuator bracket fastener has been excluded. If exists, the front mounting bolt is to be left vacant. If present on a pre-existing installation, remove and discard this bolt. DO NOT reuse.

1. **Install** upper actuator bracket (Figure 15) using only one 1/2-inch flange bolt and nut as shown.

NOTE: The locknut is pre-attached to the slider box side rail, however, one is included with the kit if required.

2. **Tighten** 1/2-inch flanged bolts to 30±5 ft. lbs. (48±6 Nm) of torque.

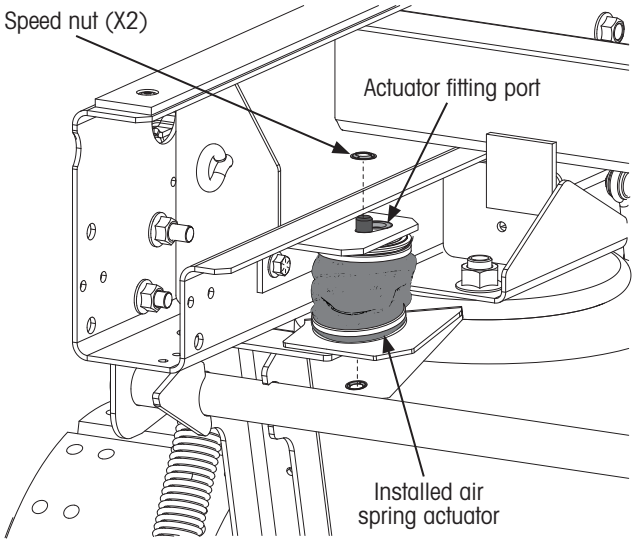

Figure 16: Installing air spring actuator

3. **Position** the air spring actuator between the upper actuator bracket and support arm assembly actuator bracket as shown in Figure 16 (fitting port pointing upward).

4. **Insert** mounting studs in lower and upper hole provided in support arm assembly lower actuator bracket and upper actuator bracket.

5. **Rotate** air spring actuator so the port for the air fitting protrudes through the upper actuator bracket (Figure 16).

6. Using a 1/2 deep-well socket, **press** a speed nut on the top and bottom mounting stud of the air spring actuator (Figure 16).

INSTALLING AIR LINES AND FITTINGS

After all SURELOK hardware is installed, SURELOK can be plumbed. For plumbing options and details, refer to SECTION V: SURELOK® PLUMBING SCHEMATICS on page 41.

1. If not already installed, **Install** an air line fitting (not included) into the air spring actuator.

NOTE: The air spring actuator features a 1/8-inch - 27 NPTF air fitting insert.

2. **Tighten** fitting to 10±1 ft. lbs. (14±1 Nm) of torque.
3. **Connect** the air line to the air spring actuator.

CHECKING SURELOK® OPERATION

With hardware and plumbing installations complete, the SURELOK system can now be tested. For test procedures, refer to SECTION VI: CHECKING SURELOK® OPERATION on page 43 or Hendrickson literature number L498 *SURELOK® Operator's Manual* included with kit.

⚠WARNING: The trailer brakes will be released during testing. Stay clear of the trailer when SURELOK disengages and the trailer rises. Personal injury may occur during trailer movement.

K-2® SLIDER BOX SURELOK® KITS

Starting in October 2015, re-designed SURELOK Dock Solution components are being installed on all new VANTRAAX® integrated suspension systems. These component are compatible with old style SURELOK kits and included in all aftermarket kits for K-2 sliders shown in K-2® SLIDER BOXES on page 7.

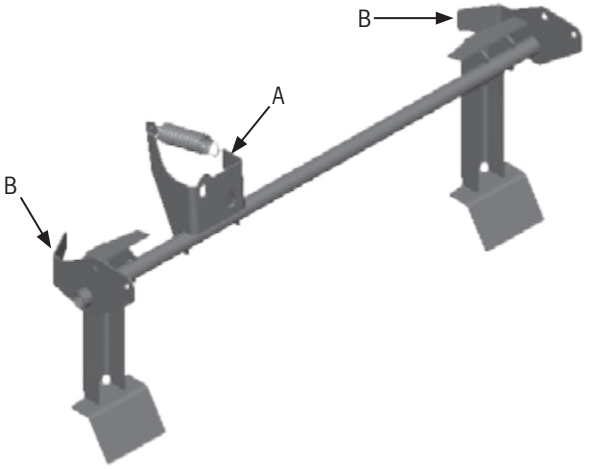

SURELOK 2001 - 2015

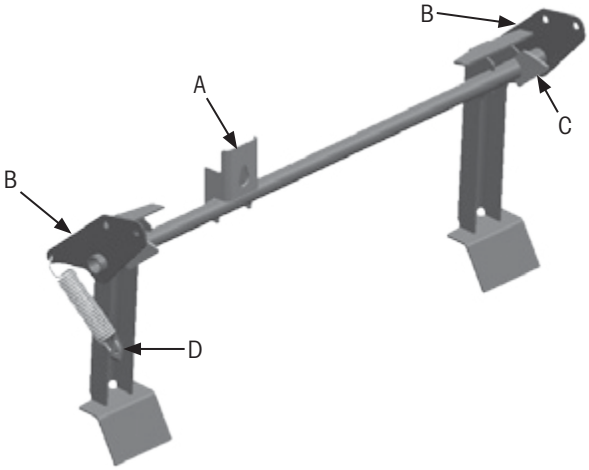

SURELOK after 2015

ITEM	DESCRIPTION
A	Actuator bracket
B	Shaft bracket
C	New down-stop
D	Spring attachment

Figure 17: 2015 SURELOK design change

VANTRAAX® HKANT 40K (HKA180T), HKANT 46K AND HTHKA INSTALLATIONS

NOTE: Suspension types in (Table 2) represent legacy products no longer available. However, SURELOK® kits and components may still be available. Refer to CONTACTING HENDRICKSON on page 4 for more information.

SLIDER		BEAM STYLE	
TYPE	CAPACITY	STANDARD [1]	EXTENDED
HTHKA [2]	19K, 23K	SLKR	SLKN
HKANT	40K, 46K	SLKS	SLKP

[1] Requires beam extensions.
[2] HT190T & HT230T suspension beams on a K-2® slider box.

Table 2: Applicable SURELOK® kits for slider suspensions with a K-2® slider box.

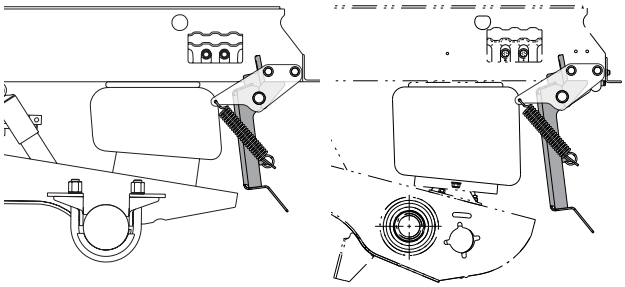

Figure 18: Sample K-2 slider SURELOK kits with long beams

With the exception of beam extensions, these SURELOK kits (Table 2 and Figure 18) install the same.

IMPORTANT: Applicable installation drawings[1] are required and must be referenced to complete these procedures.

PREPARATION

1. **Position** suspension slider in the middle of the body rail assemblies. This will provide ample working room for the technician.
2. **Ensure** the trailer parking brakes are set and trailer remains at ride height. This will remove the air from the actuator and allow existing support arm assembly, if installed, to be in the engaged position during this procedure.

[1] Applicable installation drawings are included with each SURELOK kit and supersede information in this document. For the drawing number, refer to QUICK REFERENCE TABLE on page 6. If unavailable, refer to CONTACTING HENDRICKSON on page 4.

⚠WARNING: STAY CLEAR of the trailer during brake operation. Support arm assembly movement is automatically controlled by applying or releasing parking brakes. This can cause severe personal injury.

3. If replacing the ride height lock assembly only, **remove** original components from the slider box, including fasteners.

INSTALLING THE WELD-ON REAR SUSPENSION BEAM EXTENSIONS (KIT SLKR OR SLKS ONLY)

If installing kit **SLKS** with weld-on narrow beam extensions (Figure 63 on page 35), refer to NARROW SUSPENSION BEAM WELD-ON BEAM EXTENSIONS on page 35 for suspension models that have narrow standard-length (short) rear suspension beams.

If installing kit **SLKR** with HT™ Series weld-on beam extensions (Figure 67 on page 38), refer to WIDE SUSPENSION BEAM WELD-ON BEAM EXTENSIONS on page 38 for suspension models that have wide standard-length (short) rear suspension beams.

With beam extensions installed or installing SURELOK kit **SLKN** or **SLKP**, install the support arm assembly and hardware.

INSTALLING SUPPORT ARM ASSEMBLY

NOTE: This procedure and INSTALLING AIR SPRING ACTUATOR on page 17 also apply to installation of SURELOK kit **SLKO** from page 18.

NOTICE: For best results, follow the steps in this procedure in the order specified.

1. **Install** roadside and curbside brackets (Figure 19) using 1/2-inch flange bolts provided with the kit. **Loosely install** bolts to allow brackets to move freely during the next step.

NOTE: Roadside and curbside brackets are identical and interchangeable.

IMPORTANT: **DO NOT** tighten the 1/2-inch flanged bolts at this time. The brackets must be loose to install the support arm assembly in the following steps.

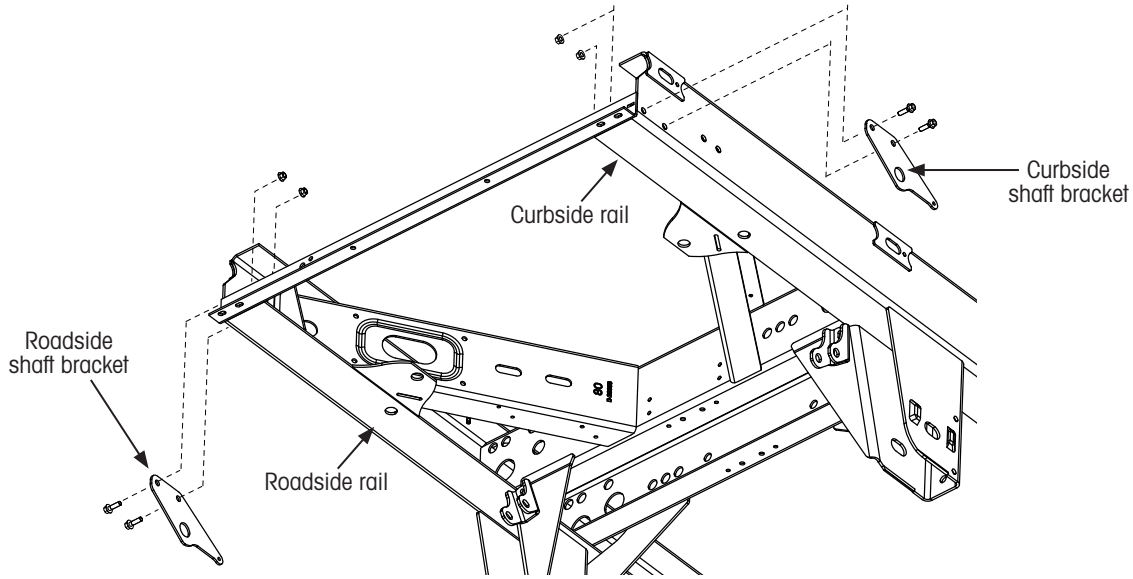

Figure 19: Slider shaft bracket installation

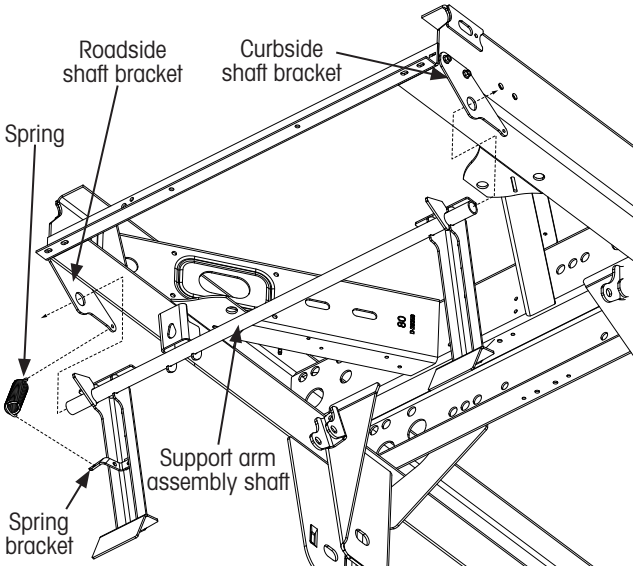

Figure 20: Support arm assembly installation

2. **Insert** one end of spring (Figure 20) through spring bracket hole on support arm assembly.

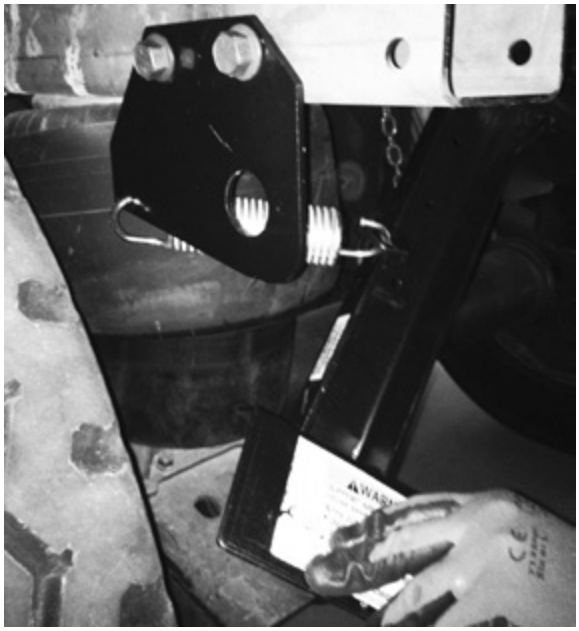

Figure 21: Arm raised above rail for spring installation

3. **Lift** roadside end of the support arm assembly, with attached spring, to roadside shaft bracket (Figure 21) and **insert** the other end of spring into spring hole of the roadside bracket.

NOTE: To gain access and attach the spring in Step 3, the top of the roadside arm on the support arm assembly (Figure 21) must be raised up above and inward of the slider rail.

4. **Insert** roadside end of the support arm assembly shaft (Figure 20) into roadside shaft bracket.

5. **Repeat** Step 4 for the curbside.

6. **Snug** all four ½-inch flanged bolts, but allow movement for shaft brackets adjustment.

NOTE: At this time, spring tension should be holding the roadside support arm top front edge against the slider rail (Figure 22).

7. To adjust roadside shaft bracket, **simultaneously**:
   A. **Pull** roadside support arm toward the disengaged position and **lift** shaft up so the top surface of the support arm is flat against the bottom surface of the slider rail (Figure 22).
   B. **Tighten** both roadside bracket flanged bolts.

8. **Repeat** Step 7 for adjusting curbside shaft bracket.

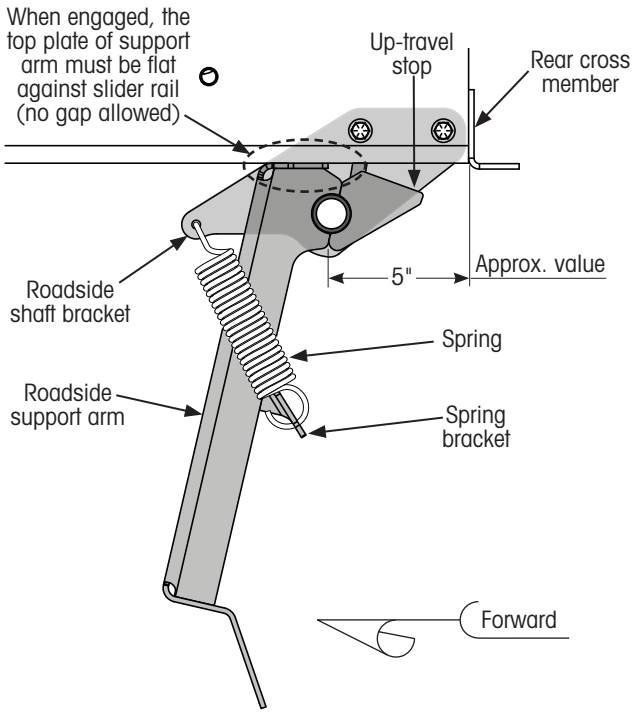

Figure 22: Verifying support arm assembly position

NOTICE: While engaged, the shaft of the support arm assembly must not assume any load from the trailer.

9. **Verify** the top surface of the support arms are flat against the underside bottom surface of the slider rails and there is no gap (Figure 22) between the top of each support arm and the slider rail.

10. **Measure** between the rear crossmember and the back edge of both arms (Figure 22). This measured distance should be approximately five inches.

IMPORTANT: If the measurement is not approximately five inches, loosen flanged bolts for both shaft brackets, return to Step 7 to repeat the procedure and recheck the installation.

11. **Tighten** all four ½-inch flanged bolts to 100±10 ft. lbs. (140±9 Nm) of torque.

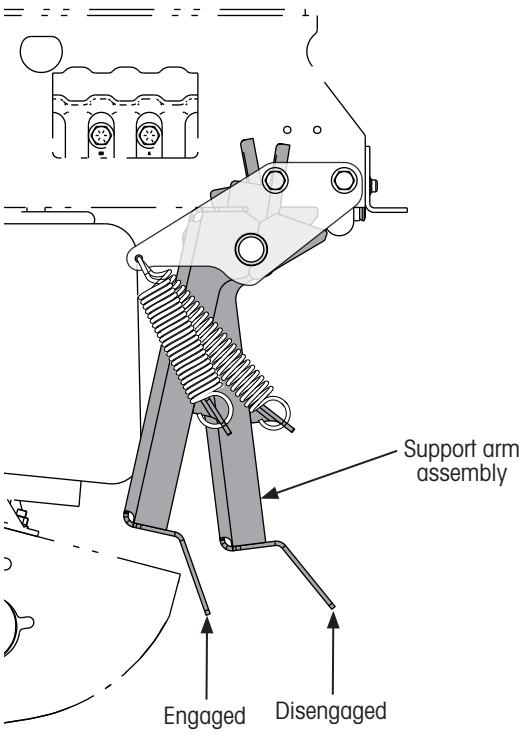

Figure 23: Checking support arm assembly movement

12. **Manually move** support arm assembly (Figure 23) between disengaged up-travel stop (Figure 22) and fully engaged positions to ensure support arms move freely without binding.
   A. **If binding or does not move freely**, loosen flanged bolts for both shaft brackets and return to Step 7.
   B. **If no binding** occurs, continue to next step.

IMPORTANT: When equipped with SURELOK®, a suspension must be operated as close as possible to its designed ride height. Suspension ride height is the primary consideration for optimal SURELOK performance (not the amount of clearance between the SURELOK support arms and the suspension beam). When the suspension is operated at its designed ride height, the SURELOK support arms will have the proper clearance from the suspension beams. Refer to Hendrickson publications L388 *Ride Height Settings* and L459 *Checking Trailer Ride Height* for complete ride height details.

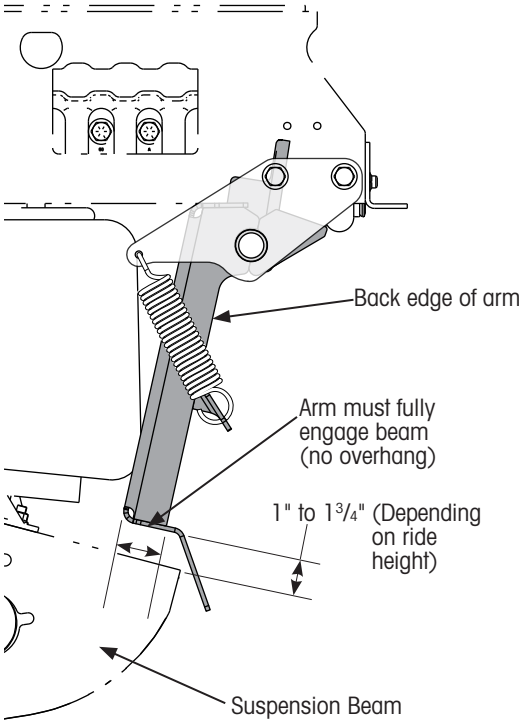

Figure 24: Checking arm-to-beam clearances

13. With the suspension at the designed ride height, measure the distance from the top of the beam to the bottom of the arm (Figure 24). An acceptable measurement range is 1" to 1¾".

IMPORTANT: The purpose of this measurement is to check the initial installation. Because this distance will vary in service due to the dead band range of the height control valve, it is not intended to be a field inspection.

NOTICE: To avoid suspension damage, DO NOT drive away with the SURELOK arms still engaged. Wait until the trailer air system is completely aired-up to ride height.

If the measurement is not within the acceptable range, check to make sure the suspension ride height is set correctly and the SURELOK kit is correctly installed thus far. If it is still outside of the acceptable range, refer to CONTACTING HENDRICKSON on page 4. They will determine if this measurement range is acceptable for your suspension.

14. Check the arm position relative to the beam (Figure 24). The arm must have full engagement with the beam. In other words, the back edge of the arm must be entirely positioned over the top surface of the beam (ignore the beam side surfaces when checking arm position).

INSTALLING AIR SPRING ACTUATOR

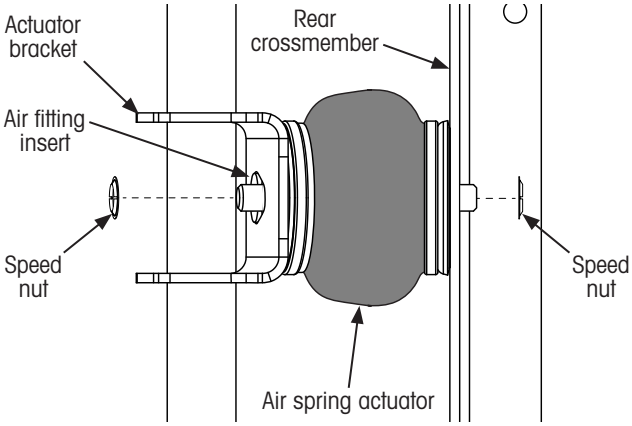

Figure 25: Air spring actuator installation details

1. **Place** the end of the air spring actuator (Figure 25) with the mounting stud and the air line fitting into the mounting hole on the actuator bracket.
2. **Orient** the air spring so the mounting stud and the air line fitting are accessible through the hole in the actuator bracket.
3. **Insert** the mounting stud on the other end of the air spring actuator into the mounting hole on the rear crossmember (Figure 25).
4. Using a ½-inch deep-well socket, **press** a speed nut on each air spring actuator mounting stud.

INSTALLING AIR LINES AND FITTINGS

After all SURELOK® hardware is installed, SURELOK can be plumbed. For plumbing options and details, refer to SECTION V: SURELOK® PLUMBING SCHEMATICS on page 41.

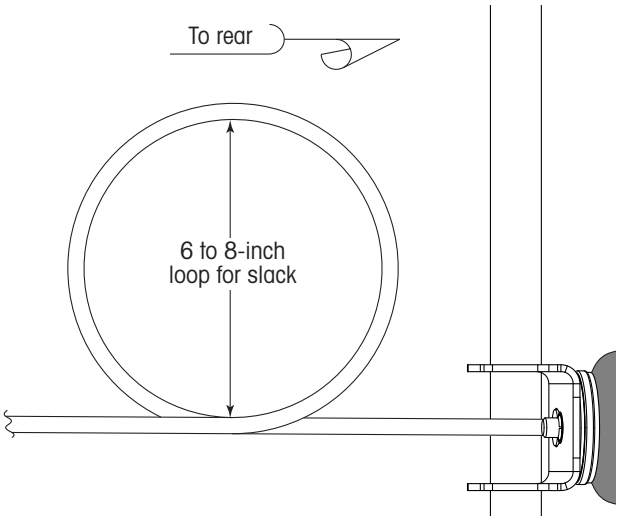

Figure 26: Creating a slack loop in the air line

1. If not already installed, **Install** an air line fitting (not included) into the air spring actuator.

NOTE: The air spring actuator features a 1/8-inch - 27 NPTF air fitting insert.

2. **Tighten** fitting to 10±1 ft. lbs. (14±1 Nm) of torque.
3. **Make** a six to eight inch slack loop (Figure 26) in the air line near the front of the actuator.

NOTICE: In this application, the fitting moves with support arm assembly. The slack loop ensures proper SURELOK operation without damaging the air line and/or air spring actuator.

4. **Connect** the air line to the air spring actuator.

CHECKING SURELOK OPERATION

With hardware and plumbing installations complete, the SURELOK system can now be tested. For test procedures, refer to SECTION VI: CHECKING SURELOK® OPERATION on page 43 or Hendrickson literature number L498 *SURELOK® Operator's Manual* included with kit.

⚠WARNING: The trailer brakes will be released during testing. Stay clear of the trailer when SURELOK disengages and the trailer rises. Personal injury may occur during trailer movement.

VANTRAAX® HKAT 46K (HKA200), HKAT 50K (HKA250), HKAT 69K23 AND HKAT 69K25 INSTALLATIONS

NOTE: Suspension types in (Table 3) represent legacy products no longer available. However, SURELOK kits and components may still be available. Refer to CONTACTING HENDRICKSON on page 4 for more information.

CAPACITY	SLIDER REVISION [1]	SURELOK KIT	
		SLKF	SLKO
HKAT 46K (HKA200)	Older	✔	
	Newer & Current		✔
HKAT 50K (HKA250)	Older	✔	
	Newer & Current		✔
HKAT 69K23			✔
HKAT 69K25			✔

[1] See Figure 4, Figure 5 on page 7 and Figure 6 on page 8.

Table 3: VANTRAAX HKAT SURELOK compatibility

Table 3 shows which SURELOK kit applies to the three generations of K-2 sliders shown on page 7. Both SURELOK kits **SLKF** and **SLKO** come with bolt-on beam extensions (Figure 74 on page 40).

INSTALLING THE REAR SUSPENSION BOLT-ON BEAM EXTENSIONS (SLKO KITS ONLY)

If installing kit **SLKO** with bolt-on beam extensions (Figure 62 on page 35), refer to WIDE SUSPENSION BEAM BOLT-ON BEAM EXTENSIONS on page 40 for installation procedures on suspension models that have wide standard-length (short) rear suspension beams.

INSTALLING SLKO SUPPORT ARM ASSEMBLY

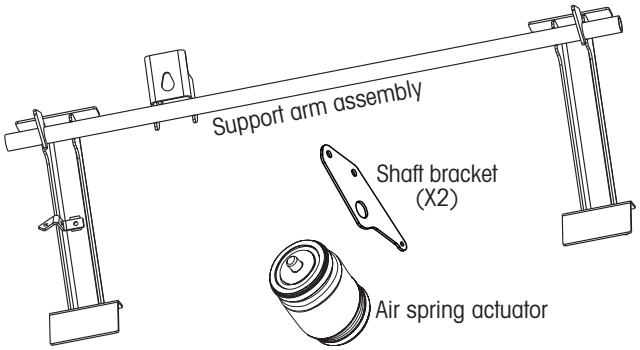

Figure 27: SURELOK installation kit SLKO major components, minus beam extensions

After the beam extensions are installed, the procedure for installing kit **SLKO** is the same as presented for VANTRAAX HKANT 40K (HKA180T) models. Refer to

INSTALLING SUPPORT ARM ASSEMBLY on page 14 to complete the **SLKO** (similar to SLKP).

INSTALLING SLKF SUPPORT ARM ASSEMBLY

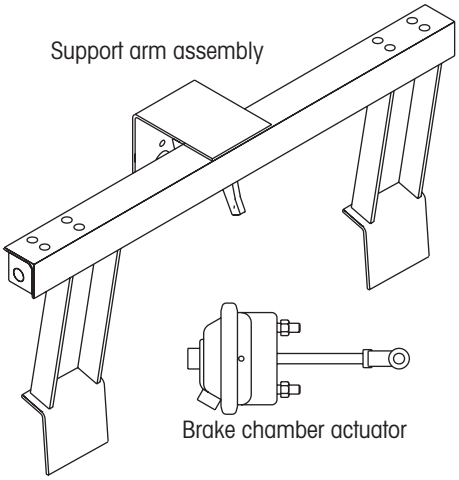

Figure 28: SURELOK installation kit SLKF major components

If the SURELOK® installation kit contains a brake chamber actuator and a support arm assembly that resembles the one shown in Figure 28, the SURELOK kit is probably **SLKF**. Use the following instructions to complete SURELOK kit SLKF installation.

NOTE: Installation procedures for SURELOK kits **SLKC** and **SLKM** (with beam extensions for wide beams, refer to page 38) have been excluded from this revision, however these SURELOK install similar to the SLKF kit.

INSTALLING THE ARM ASSEMBLY (KIT SLKF ONLY)

1. **Bolt** SURELOK support arm assembly to the underside of the slider box with eight 1/2-inch nuts and bolts provided in the installation kit (Figure 29). **Install** the bolts so hex heads are on the SURELOK mounting bracket and the nuts are on the slider box flange as shown.
2. **Tighten** to 100±10 ft. lbs. (135±12 Nm) of torque.

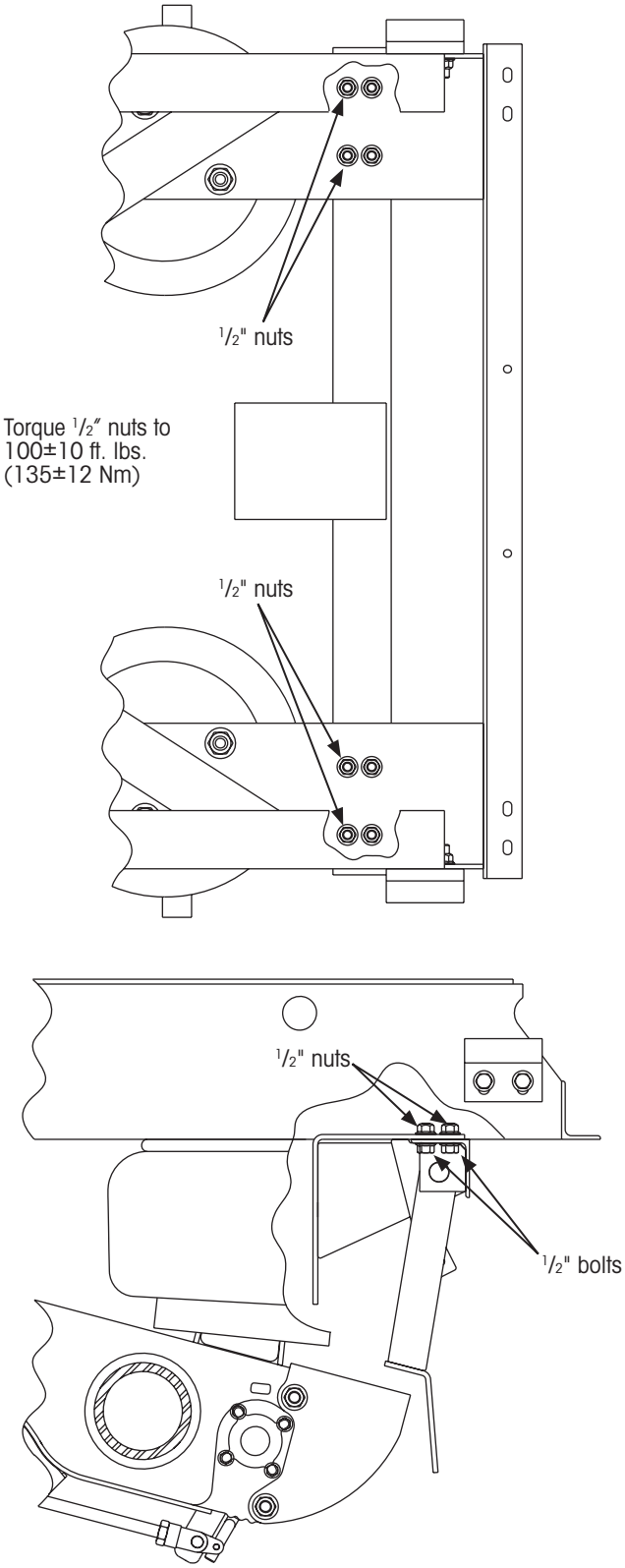

Figure 29: Arm assembly attaching details

INSTALLING THE BRAKE CHAMBER (KIT SLKF ONLY)

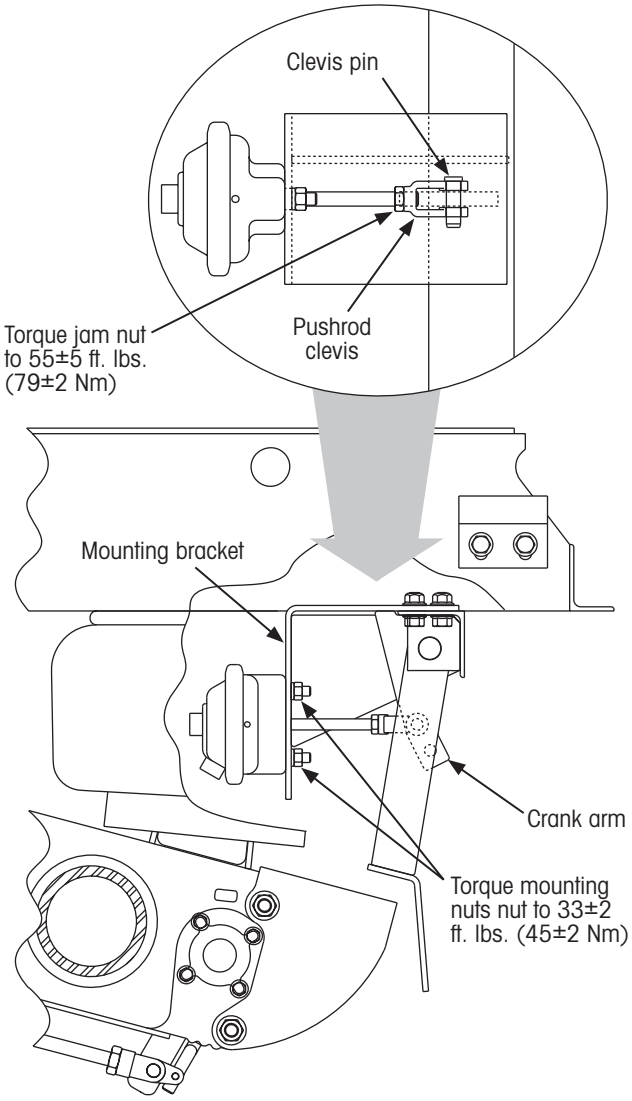

Figure 30: Brake chamber installation details for VANTRAAX HKAT 46K (HKA200) and HKAT 50K (HKA250)

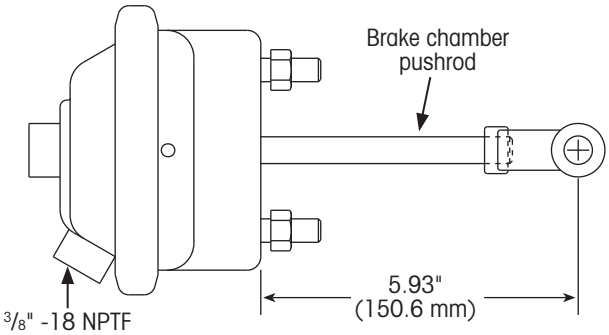

Figure 31: Brake chamber free length

1. **Measure** the brake chamber pushrod (Figure 31).
2. If necessary, **rotate** the clevis to obtain a free length of 5.93 inches.
3. **Slide** the brake chamber pushrod through the mounting bracket (Figure 30).
4. **Align** the pushrod clevis with the top hole in the crank arm.
5. **Insert** the clevis pin through the clevis and crank arm.
6. **Secure** the clevis pin with a cotter pin.
7. **Thread** nuts onto studs of brake chamber.
8. **Tighten** brake chamber mounting nuts (Figure 30) to 33±2 ft. lbs. (45±2 Nm) of torque.
9. **Tighten** the jam nut on the pushrod to 55±5 ft. lbs. (75±6 Nm) of torque.

INSTALLING THE RETURN SPRING (KIT SLKF ONLY)

1. **Hook** one end of the return spring (Figure 32) to the mounting bracket.
2. **Hook** the other end of the return spring to the bottom hole in the crank arm.

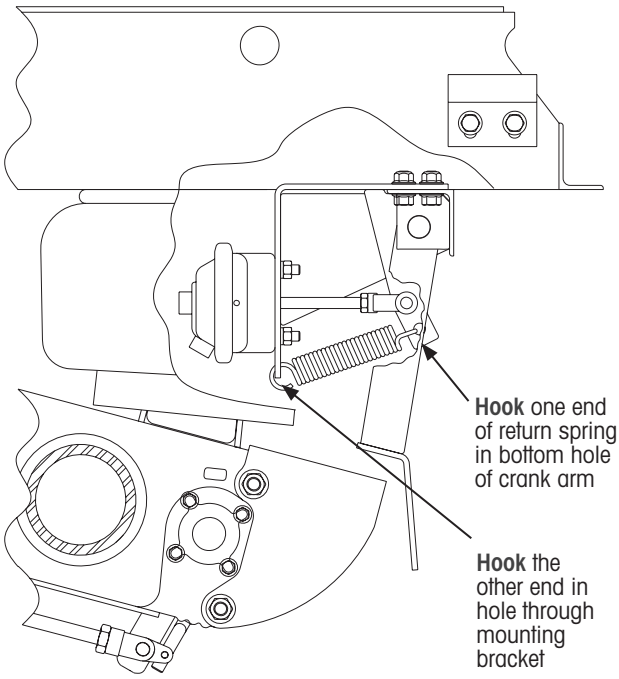

Figure 32: Spring installation details

INSTALLING AIR LINES AND FITTINGS

After all SURELOK® hardware is installed, SURELOK can be plumbed. For plumbing options and details, refer to SECTION V: SURELOK® PLUMBING SCHEMATICS on page 41.

1. If not already installed, **Install** an air line fitting (not included) into the air spring actuator.

NOTE: The threaded connection on the brake chamber actuator is 3/8" - 18 NPTF. D.O.T. tubing and fittings are required but are not included in the kit.

2. **Tighten** fitting to 10±1 ft. lbs. (14±1 Nm) of torque.

3. **Connect** the air line to the air spring actuator.

CHECKING SURELOK OPERATION

With hardware and plumbing installations complete, the SURELOK system can now be tested. For test procedures, refer to SECTION VI: CHECKING SURELOK® OPERATION on page 43 or Hendrickson literature number L498 *SURELOK® Operator's Manual* included with kit.

⚠**WARNING: The trailer brakes will be released during testing. Stay clear of the trailer when SURELOK disengages and the trailer rises. Personal injury may occur during trailer movement.**

SECTION II: INSTALLING SURELOK® ON NON-HENDRICKSON SUBFRAME

HIGH CONTROL INTRAAX® AANT INSTALLATIONS

SURELOK kit **SLKZ** is a universal dock-lock system that can be installed on a non-Hendrickson slider or trailer subframe. It is intended to be used with High Control INTRAAX AANT suspensions configured with extended suspension beams.

Once mounting holes are drilled to specifications, the SURELOK installation is similar to SURELOK kit **SLKP** for VANTRAAX® sliders.

PREPARATION

1. **Position** suspension slider in the middle of the body rail assemblies. This will provide ample working room for the technician.
2. **Ensure** the trailer parking brakes are set and trailer remains at ride height. This will remove the air from the actuator and allow existing support arm assembly, if installed, to be in the engaged position during this procedure.

⚠**WARNING: STAY CLEAR of the trailer during brake operation. Support arm assembly movement is automatically controlled by applying or releasing parking brakes. This can cause severe personal injury.**

INSTALLING SUPPORT ARM ASSEMBLY

NOTICE: For best results, follow the steps in this procedure in the order specified.

1. Refer to the installation drawing[1] for specifications for **drilling** mounting holes for the side brackets and other hardware included with the kit.

NOTE: Holes (Figure 33 and Figure 39 on page 25) must be provided for installing shaft brackets. Additionally, the right angle brace, shown, must also be provided, with holes for the air spring actuator installation.

2. **Install** roadside and curbside brackets (Figure 33) using 1/2-inch flange bolts provided with the kit. **Loosely install** bolts to allow brackets to move freely during the next step.

NOTE: Roadside and curbside brackets are identical and interchangeable.

IMPORTANT: **DO NOT** tighten the 1/2-inch flanged bolts at this time. The brackets must be loose to install the support arm assembly in the following steps.

[1] Applicable installation drawings are included with each SURELOK kit and supersede information in this document. For the drawing number, refer to QUICK REFERENCE TABLE on page 6. If unavailable, refer to CONTACTING HENDRICKSON on page 4.

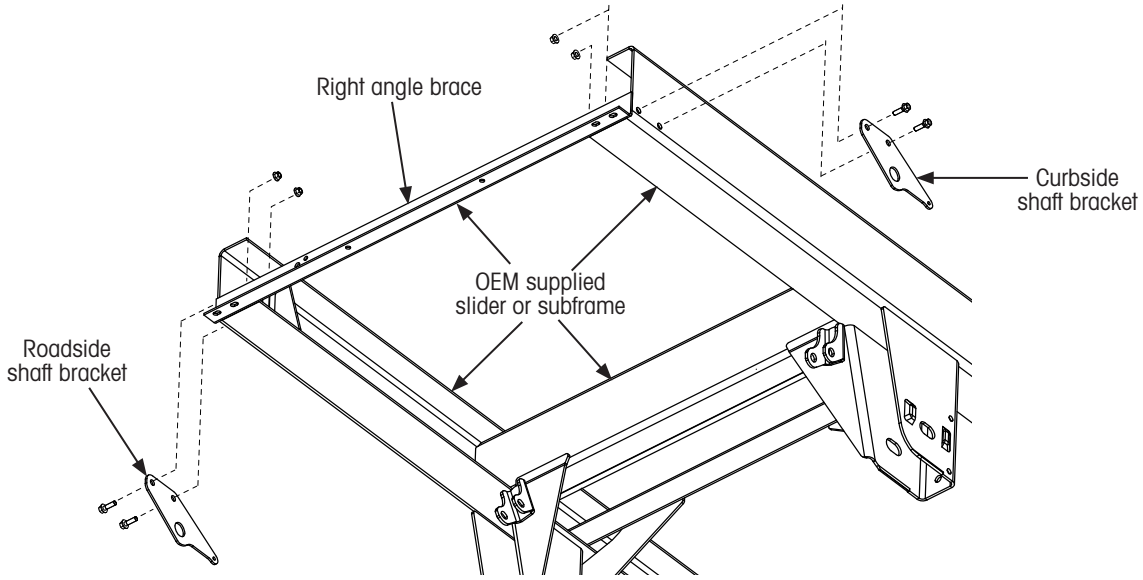

Figure 33: Shaft bracket installation to subframe

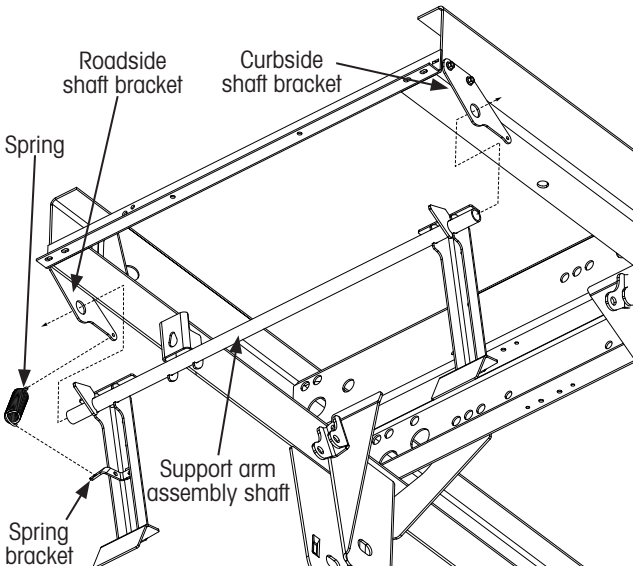

Figure 34: Support arm assembly installation

3. **Insert** one end of spring (Figure 34) through spring bracket hole on support arm assembly.

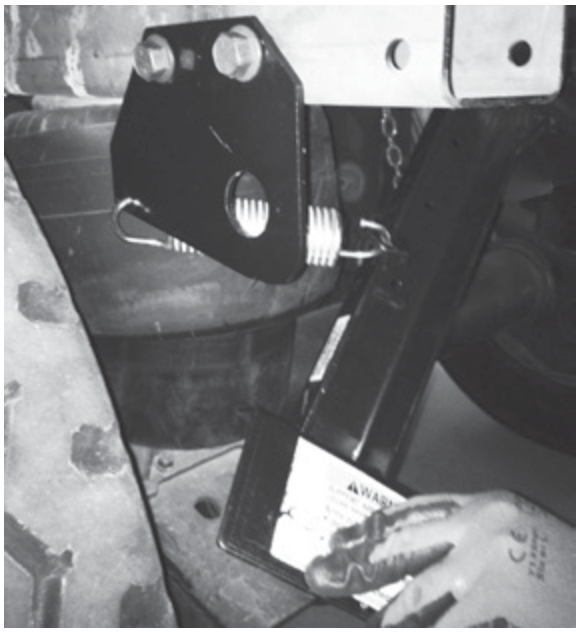

Figure 35: Arm raised above rail for spring installation

4. **Lift** roadside end of the support arm assembly, with attached spring, to roadside shaft bracket (Figure 35) and **insert** the other end of spring into spring hole of the roadside bracket.

NOTE: To gain access and attach the spring in Step 4, the top of the roadside arm on the support arm assembly (Figure 35) must be raised up above and inward of the side rail.

5. **Insert** roadside end of the support arm assembly shaft (Figure 34) into roadside shaft bracket.

6. **Repeat** Step 5 for the curbside.

7. **Snug** all four $^1/_2$-inch flanged bolts, but allow movement for shaft brackets adjustment.

NOTE: At this time, spring tension should be holding the roadside support arm top front edge against the side rail (Figure 36).

8. To adjust roadside shaft bracket, **simultaneously**:
   A. **Pull** roadside support arm toward the disengaged position and **lift** shaft up so the top surface of the support arm is flat against the bottom surface of the side rail (Figure 36).
   B. **Tighten** both roadside bracket flanged bolts.

9. **Repeat** Step 8 for adjusting curbside shaft bracket.

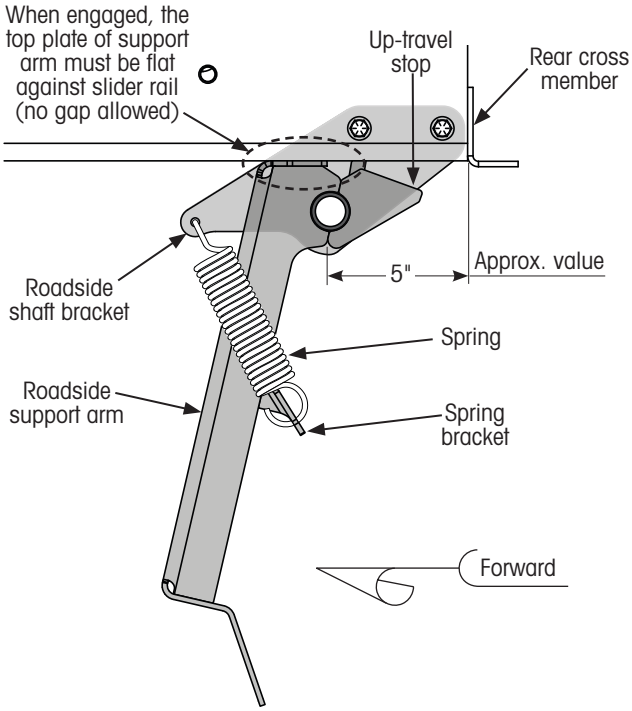

Figure 36: Verifying support arm assembly position

NOTICE: While engaged, the shaft of the support arm assembly must not assume any load from the trailer.

10. **Verify** the top surface of the support arms are flat against the underside bottom surface of the side rails and there is no gap (Figure 36) between the top of each support arm and the side rail.

11. **Measure** between the rear crossmember and the back edge of both arms (Figure 36). This measured distance should be approximately five inches.

IMPORTANT: If the measurement is not approximately five inches, loosen flanged bolts for both shaft brackets, return to Step 8 to repeat the procedure and recheck the installation.

12. **Tighten** all four ½-inch flanged bolts to 100±10 ft. lbs. (140±9 Nm) of torque.

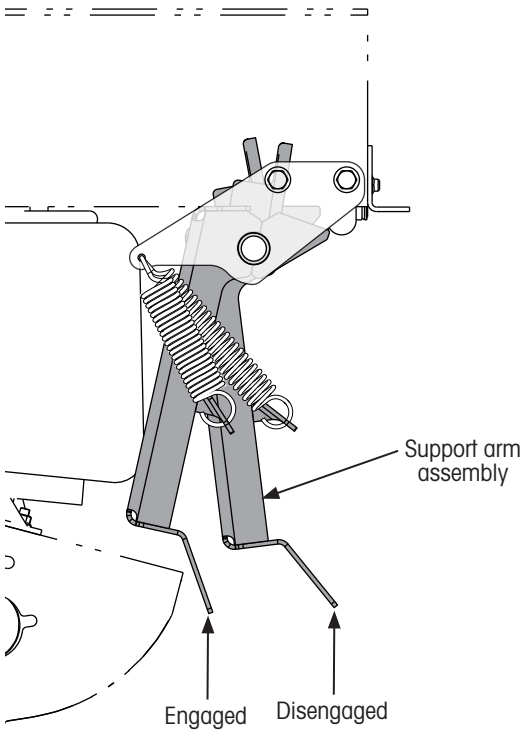

Figure 37: Checking support arm assembly movement

13. **Manually move** support arm assembly (Figure 37) between disengaged up-travel stop (Figure 36) and fully engaged positions to ensure support arms move freely without binding.
    A. **If binding or does not move freely**, loosen flanged bolts for both shaft brackets and return to Step 8.
    B. **If no binding** occurs, continue to next step.

IMPORTANT: When equipped with SURELOK®, a suspension must be operated as close as possible to its designed ride height. Suspension ride height is the primary consideration for optimal SURELOK performance (not the amount of clearance between the SURELOK support arms and the suspension beam). When the suspension is operated at its designed ride height, the SURELOK support arms will have the proper clearance from the suspension beams. Refer to Hendrickson publications L388 *Ride Height Settings* and L459 *Checking Trailer Ride Height* for complete ride height details.

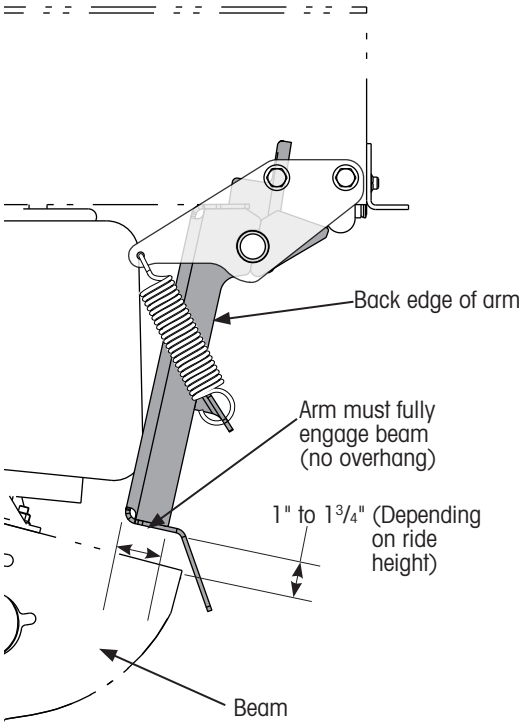

Figure 38: Checking arm-to-beam clearances

14. With the suspension at the designed ride height, measure the distance from the top of the beam to the bottom of the arm (Figure 38). An acceptable measurement range is 1" to 1¾".

IMPORTANT: The purpose of this measurement is to check the initial installation. Because this distance will vary in service due to the dead band range of the height control valve, it is not intended to be a field inspection.

NOTICE: To avoid suspension damage, DO NOT drive away with the SURELOK arms still engaged. Wait until the trailer air system is completely aired-up to ride height.

If the measurement is not within the acceptable range, check to make sure the suspension ride height is set correctly and the SURELOK kit is correctly installed thus far. If it is still outside of the acceptable range, refer to CONTACTING HENDRICKSON on page 4. They will determine if this measurement range is acceptable for your suspension.

15. Check the arm position relative to the beam (Figure 38). The arm must have full engagement with the beam. In other words, the back edge of the arm must be entirely positioned over the top surface of the beam (ignore the beam side surfaces when checking arm position).

INSTALLING AIR SPRING ACTUATOR

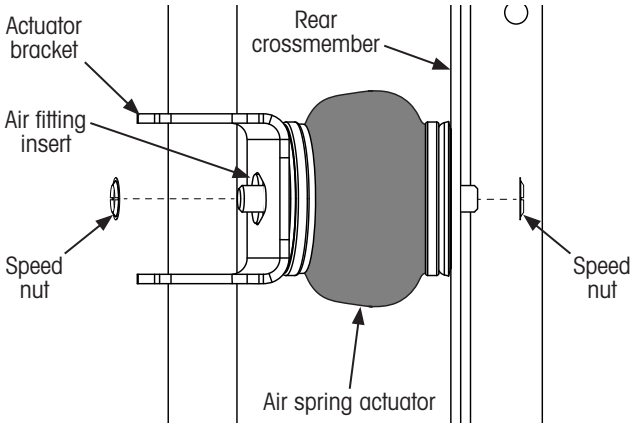

Figure 39: Air spring actuator installation details

1. **Place** the end of the air spring actuator (Figure 39) with the mounting stud and the air line fitting into the mounting hole on the actuator bracket.
2. **Orient** the air spring so the mounting stud and the air line fitting are accessible through the hole in the actuator bracket.
3. **Insert** the mounting stud on the other end of the air spring actuator into the mounting hole on the rear crossmember (Figure 39).
4. Using a 1/2-inch deep-well socket, **press** a speed nut on each air spring actuator mounting stud.

INSTALLING AIR LINES AND FITTINGS

After all SURELOK® hardware is installed, SURELOK can be plumbed. For plumbing options and details, refer to SECTION V: SURELOK® PLUMBING SCHEMATICS on page 41.

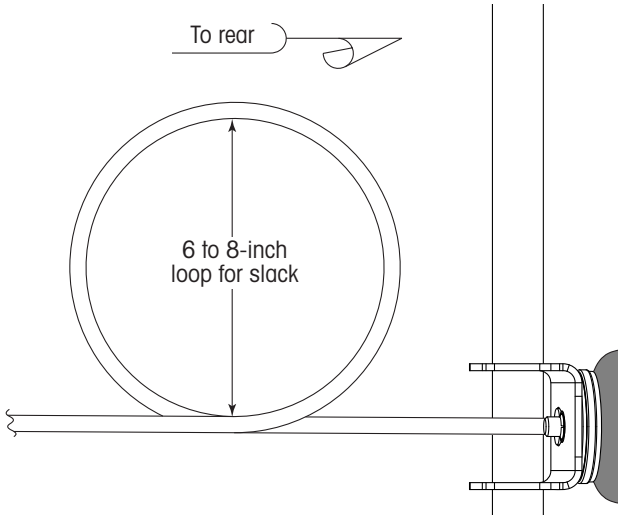

Figure 40: Creating a slack loop in the air line

1. If not already installed, **Install** an air line fitting (not included) into the air spring actuator.

NOTE: The air spring actuator features a 1/8-inch - 27 NPTF air fitting insert.

2. **Tighten** fitting to 10±1 ft. lbs. (14±1 Nm) of torque.
3. **Make** a six to eight inch slack loop (Figure 40) in the air line near the front of the actuator.

NOTICE: In this application, the fitting moves with support arm assembly. The slack loop ensures proper SURELOK operation without damaging the air line and/or air spring actuator.

4. **Connect** the air line to the air spring actuator.

CHECKING SURELOK OPERATION

With hardware and plumbing installations complete, the SURELOK system can now be tested. For test procedures, refer to SECTION VI: CHECKING SURELOK® OPERATION on page 43 or Hendrickson literature number L498 *SURELOK® Operator's Manual* included with kit.

⚠WARNING: The trailer brakes will be released during testing. Stay clear of the trailer when SURELOK disengages and the trailer rises. Personal injury may occur during trailer movement.

SECTION III: INSTALLING SURELOK® ON STATIONARY (NON-SLIDER) SUSPENSIONS

Hendrickson manufactures two styles of non-slider fixed suspensions: INTRAAX® and HT™ Series. SURELOK® can be installed on either style of stationary suspension.

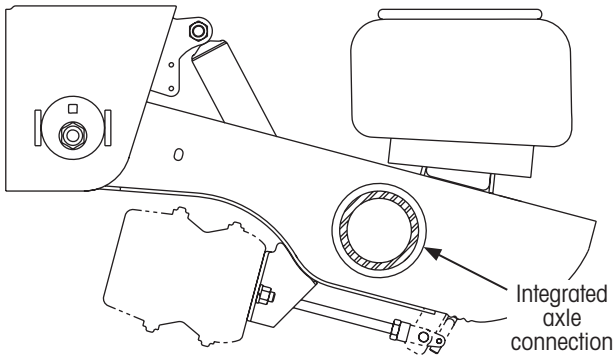

Figure 41: INTRAAX style stationary suspension

INTRAAX suspensions (Figure 41) are distinguished by the way the axle connects to the beam assembly. On an INTRAAX suspension, the axle is integrated and welded into the beam assembly during manufacturing. If using an INTRAAX stationary suspension, look for INTRAAX specific SURELOK installation instructions listed in QUICK REFERENCE TABLE on page 6 and the following pages.

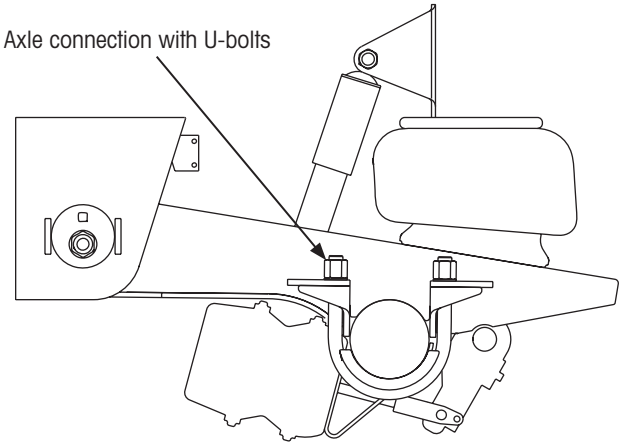

Figure 42: HT style stationary suspension

HT Series suspensions (Figure 42) include axle seats where an axle is welded to the beam assembly by the OEM during trailer build or in the field at a repair facility (refer to L577 *HT™ Series Suspension Installation* for details). U-bolts are added for safety purposes. If using an HT suspension, refer to Table 5 on page 29 and QUICK REFERENCE TABLE on page 6 on locating the applicable installation procedure.

INTRAAX SURELOK INSTALLATION

SURELOK kits with a brake chamber actuator can be installed on INTRAAX AAT or AANT suspension types:

NOTE: For more details, refer to QUICK REFERENCE TABLE on page 6 or CONTACTING HENDRICKSON on page 4.

INTRAAX		BEAM STYLE	
TYPE	CAPACITY	STANDARD [1]	EXTENDED
AAT	23K, 25K & 30K	**SLKF**	**SLKV**
AANT	23K	**SLKT, SLKW**	**SLKY, SLKX**
[1] Requires beam extensions			

Table 4: Applicable SURELOK kits for INTRAAX suspensions with brake chamber actuators

IMPORTANT: Applicable installation drawings [1] are required and must be referenced to complete these procedures.

INSTALLING REAR SUSPENSION BEAM EXTENSIONS

For beam extension installation procedures on standard beams for:

AAT Refer to WIDE SUSPENSION BEAM BOLT-ON BEAM EXTENSIONS on page 40.

AANT Refer to NARROW SUSPENSION BEAM WELD-ON BEAM EXTENSIONS on page 35.

INSTALLING SUPPORT ARM ASSEMBLY

After the beam extensions are in place, the SURELOK assembly can be installed. Use the following procedure to install the support arm assembly.

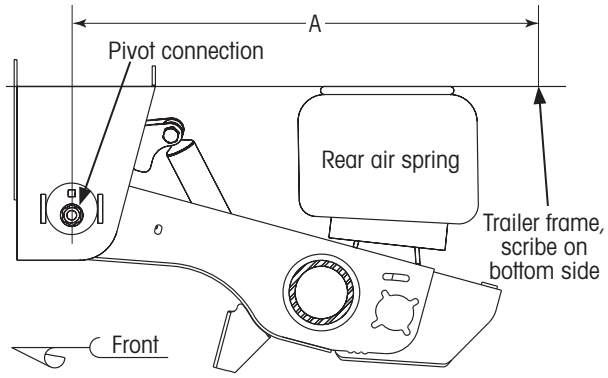

Figure 43: Sample locating measurement (AANT shown)

[1] Applicable installation drawings are included with each SURELOK kit and supersede information in this document. For the drawing number, refer to QUICK REFERENCE TABLE on page 6. If unavailable, refer to CONTACTING HENDRICKSON on page 4.

1. Refer to applicable installation drawings[1] to **measure A** (Figure 43) and **locate** the support arm assembly on the trailer frame.
2. **Scribe** a line on the underside of the trailer frame.
3. **Repeat** the above steps on the other side of the trailer frame.

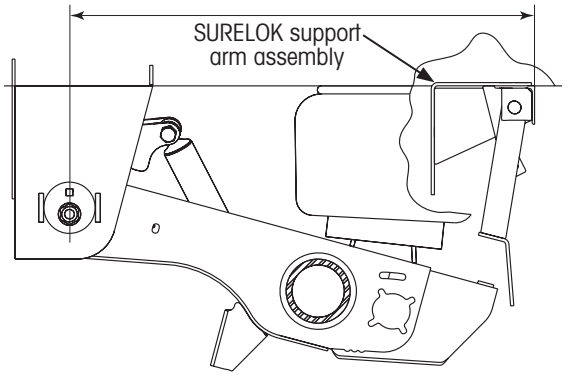

Figure 44: Sample placement of SURELOK support arm assembly

4. **Position** the support arm assembly (Figure 44) against both trailer frame beams so the back edge of the support arm assembly is on the lines scribed in previous step.

IMPORTANT: Refer to applicable installation drawing for complete placement information.

5. Using C-clamps or other suitable devices, **temporarily clamp** the SURELOK® assembly in place against the trailer frame.
6. **Check** the measurements to verify SURELOK is in the proper position on the underside of the trailer frame.
7. **Tack weld** SURELOK into place.
8. **Recheck** the measurements.
9. **Manually push** the SURELOK support arm assembly forward.
10. **Verify** the arms are properly aligned over the beam extensions and the support arm assembly rotates freely.
11. **Remove** the temporary clamps.
12. Refer to applicable installation drawing for weld specifications and **finish welding** the SURELOK assembly to the trailer frame with a ¼ inch (6 mm) fillet weld. Adhere to the same welding parameters as presented in WELDING DETAILS on page 44.

INSTALLING BRAKE CHAMBER ACTUATOR

After the support arm assembly is in place, the brake chamber actuator can be installed. Use the following procedure to install the brake chamber actuator.

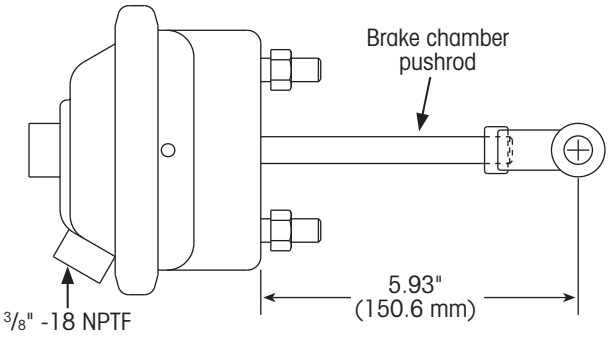

Figure 45: Brake chamber free length

1. **Measure** the brake chamber pushrod. If necessary, rotate the clevis to obtain a free length of 5.93 inches (Figure 45).

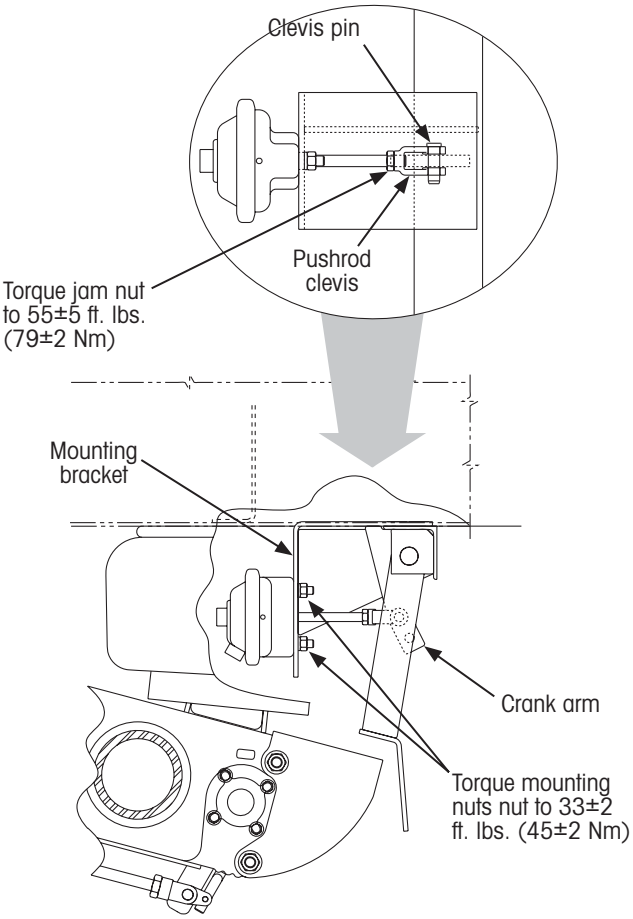

Figure 46: INTRAAX® stationary brake chamber installation details

[1] Applicable installation drawings are included with each SURELOK kit and supersede information in this document. For the drawing number, refer to QUICK REFERENCE TABLE on page 6. If unavailable, refer to CONTACTING HENDRICKSON on page 4.

2. **Slide** the brake chamber pushrod through the mounting bracket (Figure 46). Align the pushrod clevis with the top hole in the crank arm. Insert the clevis pin through the clevis and crank arm. Secure the clevis pin with a cotter pin.

3. **Tighten** the brake chamber mounting nuts (Figure 46) to 33±2 ft. lbs. (45±2 Nm) of torque.

4. **Tighten** the jam nut on the pushrod to 55±5 ft. lbs. (75±6 Nm) of torque.

INSTALLING RETURN SPRING

After the brake chamber actuator is in place, the return spring can be installed. Use the following procedure to install the return spring.

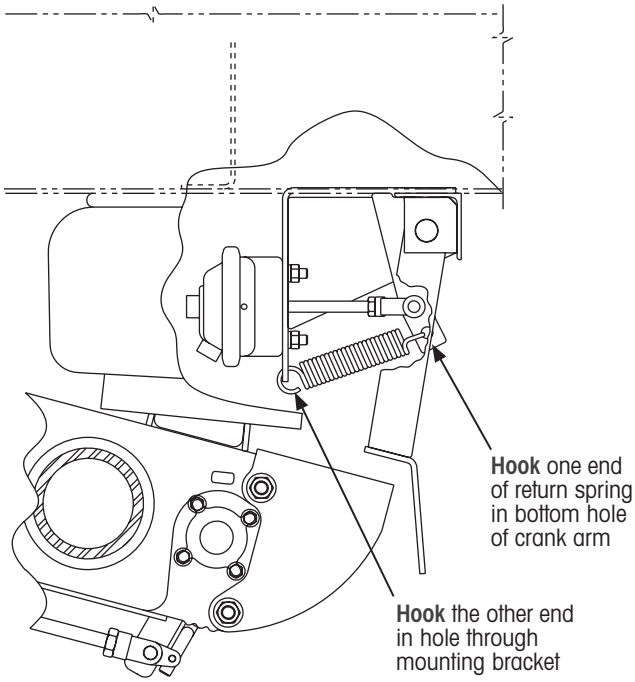

Figure 47: Spring installation details

1. **Hook** one end of the spring to the mounting bracket (Figure 47).

2. **Hook** the other end of the spring to the bottom hole in the crank arm.

INSTALLING AIR LINES AND FITTINGS

After all SURELOK® hardware is installed, SURELOK can be plumbed. For plumbing options and details, refer to SECTION V: SURELOK® PLUMBING SCHEMATICS on page 41.

1. If not already installed, **Install** an air line fitting (not included) into the brake chamber actuator.

NOTE: The threaded connection on the brake chamber actuator is 3/8" - 18 NPTF. D.O.T. tubing and fittings are required but are not included in the kit.

2. **Tighten** fitting to 10±1 ft. lbs. (14±1 Nm) of torque.

3. **Connect** the air line to the brake chamber actuator.

CHECKING SURELOK OPERATION

With hardware and plumbing installations completed, the SURELOK system can now be tested. For test procedures, refer to SECTION VI: CHECKING SURELOK® OPERATION on page 43 or Hendrickson literature number L498 *SURELOK® Operator's Manual* included with kit.

⚠WARNING: The trailer brakes will be released during testing. Stay clear of the trailer when SURELOK disengages and the trailer rises. Personal injury may occur during trailer movement.

HT™ SERIES SURELOK® APPLICATIONS

HT190T/HT230T, HC190T/HC230T INSTALLATIONS

These two top mount HT Series suspension systems share the same suspension beam styles and SURELOK options. However, there are some differences between legacy and current designs.

NOTE: For more details, refer to QUICK REFERENCE TABLE on page 6 or CONTACTING HENDRICKSON on page 4.

CAPACITY	SURELOK KIT
HT190T	**SLKA** [1, 2]
HT230T	
HT190T	**SLKK** [3]
HT230T	
HC190T	**SLKL** [3]
HC230T	
HC190T	**SLKQ** [1]
HC230T	

1 With beam extensions.
2 Before 4/15/96 and after 11/30/97.
3 With 600 series model numbers.

Table 5: HT Series suspension brake chamber SURELOK kits.

IMPORTANT: Applicable installation drawings[1] are required and must be referenced to complete these procedures.

INSTALLING WELD-ON REAR BEAM EXTENSIONS (KIT SLKA AND SLKL)

Some SURELOK installation kits, listed in Table 5 and QUICK REFERENCE TABLE on page 6, include weld-on beam extensions (Figure 67 on page 38). These beam extensions are required to install SURELOK on HT™ Series suspension models that have standard-length rear suspension beams. Refer to WIDE SUSPENSION BEAM WELD-ON BEAM EXTENSIONS on page 38 to install the beam extensions on these suspensions.

[1] Applicable installation drawings are included with each SURELOK kit and supersede information in this document. For the drawing number, refer to QUICK REFERENCE TABLE on page 6. If unavailable, refer to CONTACTING HENDRICKSON on page 4.

INSTALLING SUPPORT ARM ASSEMBLY

After the beam extensions are in place, the SURELOK support arm assembly can be installed. Use the following procedure to install the support arm assembly.

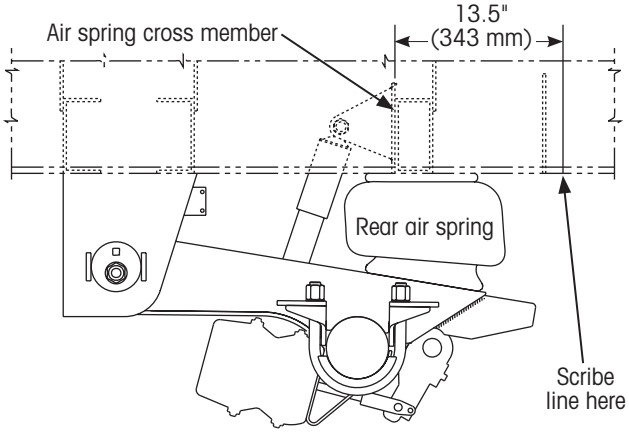

Figure 48: Marking SURELOK® mounting position

1. **Locate** the crossmember nearest the rear air spring (Figure 48).
2. **Measure** 13½ inches from the front edge of this crossmember to the rear of the suspension and scribe a line on the underside of the trailer frame (Figure 48).
3. **Repeat** this procedure on the other side of the trailer frame.

IMPORTANT: The 13½-inch measurement includes the air spring crossmember thickness.

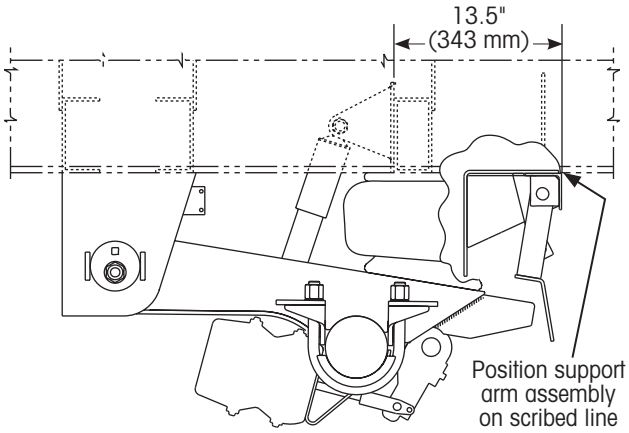

Figure 49: Positioning SURELOK on the scribed line

4. **Position** the SURELOK support arm assembly against both trailer frame beams (Figure 49) so the back edge of the support arm assembly is on the lines scribed in the previous step.

5. Using C-clamps or other suitable devices, **temporarily clamp** the SURELOK® assembly in place against the trailer frame.
6. **Check** the measurements to verify SURELOK is in the proper position on the underside of the trailer frame.
7. **Tack weld** SURELOK into place.
8. **Recheck** the measurements.
9. **Manually push** the SURELOK support arm assembly forward.
10. **Verify** the arms are properly aligned over the beam extensions and the support arm assembly rotates freely.

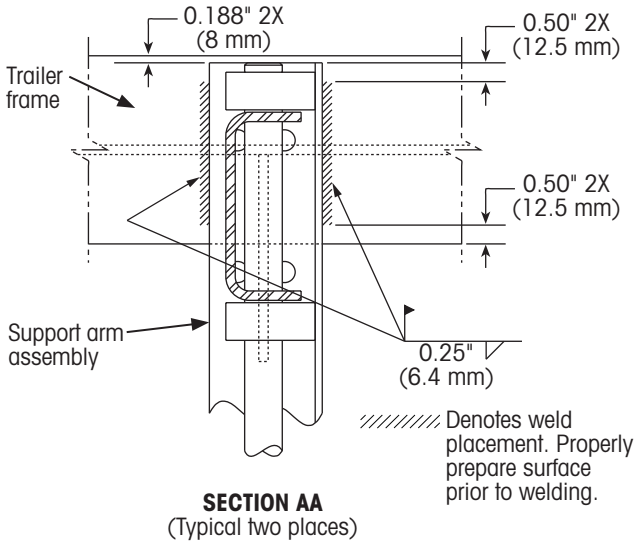

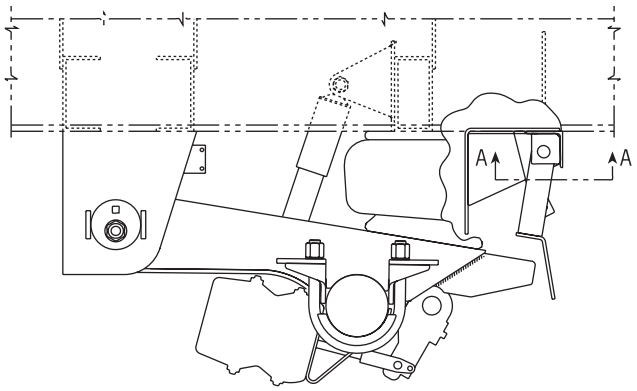

Figure 50: Kit SLKA welding details

11. **Remove** the temporary clamps and **finish welding** the SURELOK assembly to the slider box bottom flange with a 1/4-inch (6 mm) fillet weld (Figure 49). Adhere to the same welding parameters as presented on APPENDIX A: WELDING DETAILS on page 44.

INSTALLING BRAKE CHAMBER ACTUATOR

After the support arm assembly is in place, the brake chamber actuator can be installed. Use the following procedure to install the brake chamber actuator.

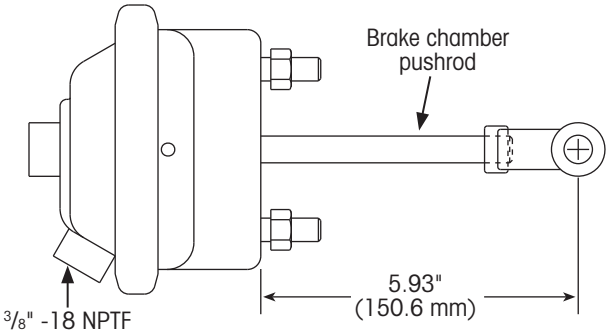

Figure 51: Brake chamber free length

1. **Measure** the brake chamber pushrod (Figure 51). If necessary, rotate the clevis to obtain a free length of 5.93 (150.6 mm) inches.

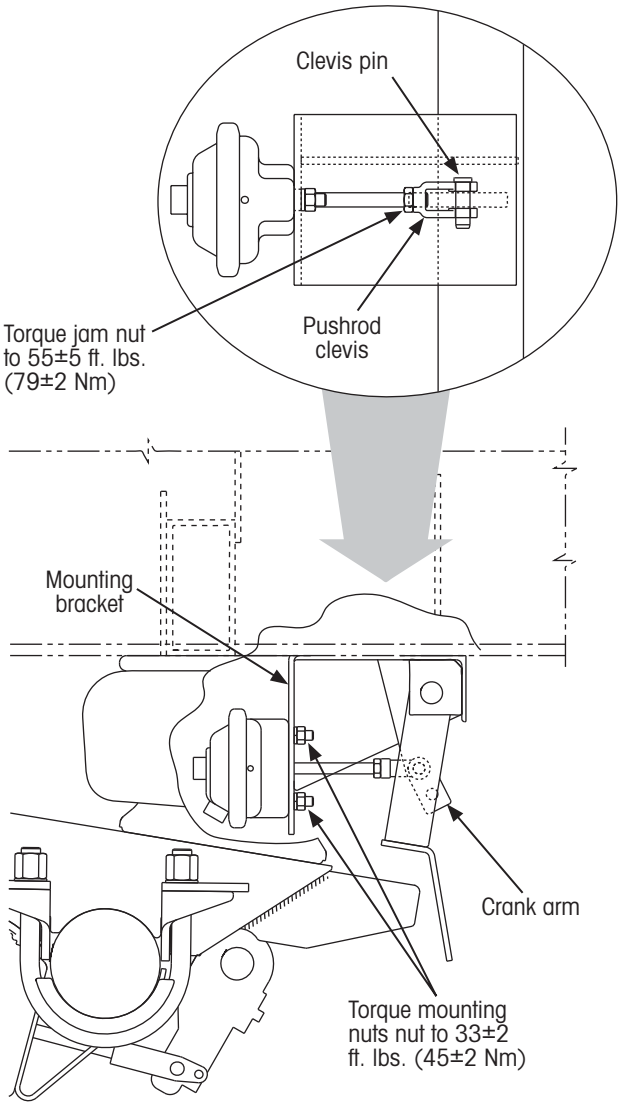

Figure 52: HT190T/HT230T brake chamber installation details

2. **Slide** the brake chamber pushrod through the mounting bracket (Figure 52).
3. **Align** the pushrod clevis with the top hole in the crank arm.
4. **Insert** the clevis pin through the clevis and crank arm.
5. **Secure** the clevis pin with a cotter pin.

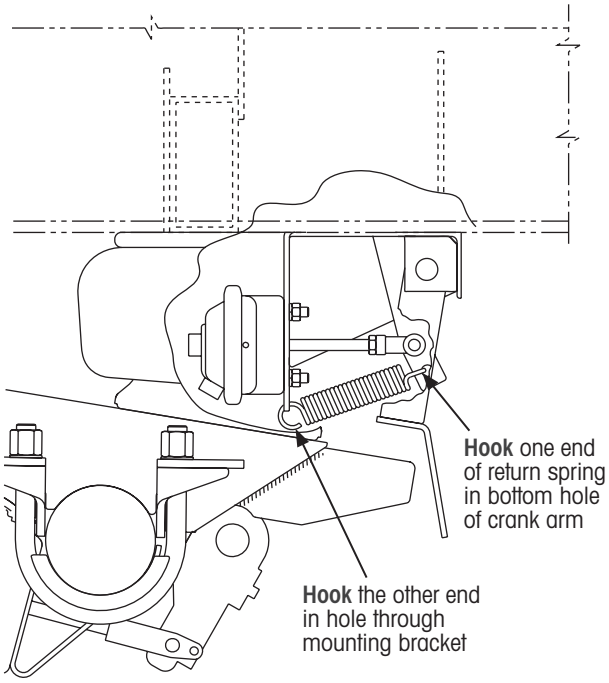

Figure 53: Spring installation details

6. **Tighten** the brake chamber mounting nuts (Figure 52) to 33±2 ft. lbs. (45±2 Nm) of torque.
7. **Tighten** the jam nut on the pushrod to 55±5 ft. lbs. (79±2 Nm) of torque.

INSTALLING THE RETURN SPRING.

Use the following procedure to install the return spring.

1. **Hook** one end of the spring to the mounting bracket (Figure 53).
2. **Hook** other end of the spring to the bottom hole in the crank arm.

INSTALLING AIR LINES AND FITTINGS

After all SURELOK® hardware is installed, SURELOK can be plumbed. For plumbing options and details, refer to SECTION V: SURELOK® PLUMBING SCHEMATICS on page 41.

1. If not already installed, **Install** an air line fitting (not included) into the air spring actuator.

NOTE: The threaded connection on the brake chamber actuator is 3/8" - 18 NPTF. D.O.T. tubing and fittings are required but are not included in the kit.

2. **Tighten** fitting to 10±1 ft. lbs. (14±1 Nm) of torque.
3. **Connect** the air line to the air spring actuator.

CHECKING SURELOK OPERATION

With hardware and plumbing installations complete, the SURELOK system can now be tested. For test procedures, refer to SECTION VI: CHECKING SURELOK® OPERATION on page 43 or Hendrickson literature number L498 *SURELOK® Operator's Manual* included with kit.

⚠WARNING: The trailer brakes will be released during testing. Stay clear of the trailer when SURELOK disengages and the trailer rises. Personal injury may occur during trailer movement.

HT250US SURELOK® INSTALLATION

Because suspension beams cannot be easily extended on an underslung suspension type, the SURELOK support arms are mounted above the axle.

IMPORTANT: Applicable installation drawings[1] are required and must be referenced to complete these procedures.

NOTE: This kit is intended for use on HT250US suspension systems only. Any other application must be approved in writing by Hendrickson trailer suspension systems engineering.

INSTALLING SUPPORT ARM ASSEMBLY

Use the following procedure to install the support arm assembly.

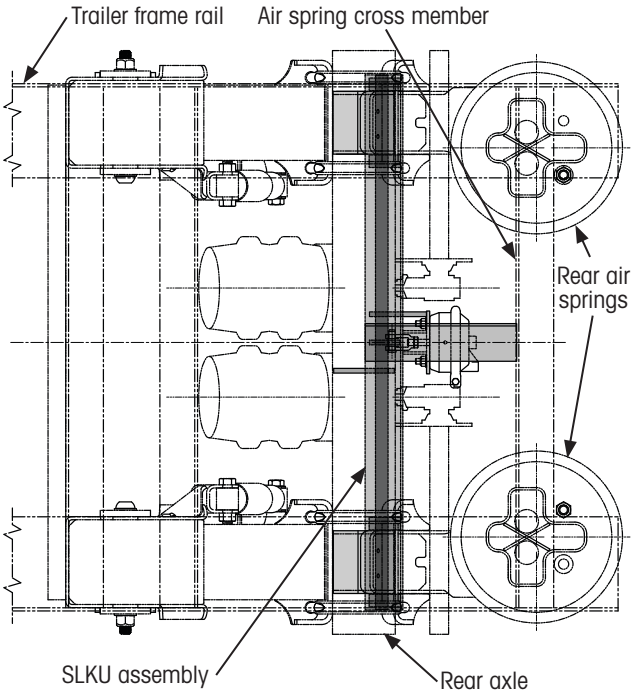

Figure 54: SLKU assembly top view

1. **Position** the **SLKU** assembly above the rear axle and up against the bottom side of the trailer frame rail on each side as shown in Figure 54.
2. **Locate** the crossmember nearest the rear air spring (Figure 54 and Figure 55).

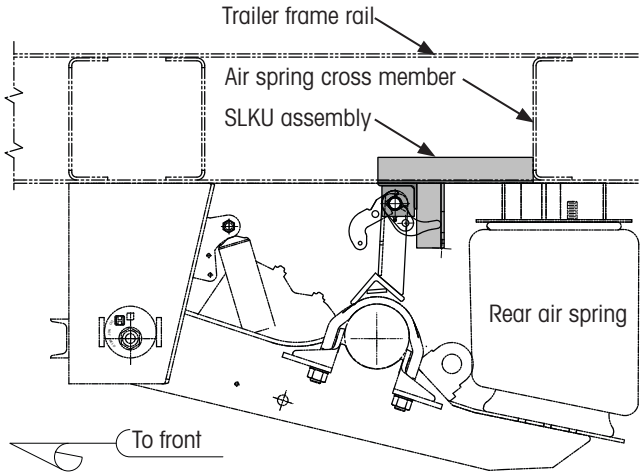

Figure 55: SLKU assembly mounting position

3. **Position** the back edge of the SLKU assembly to the rear air spring crossmember as shown in Figure 55.
4. **Ensure** the SLKU assembly is positioned, as shown in the installation drawing; over the axle and perpendicular to the trailer frame rails and air spring crossmember.
5. Using C-clamps or other suitable devices, **temporarily clamp** the SLKU assembly in place against the trailer frame rails.
6. **Double check** positioning, adjust as needed and **tack weld**.

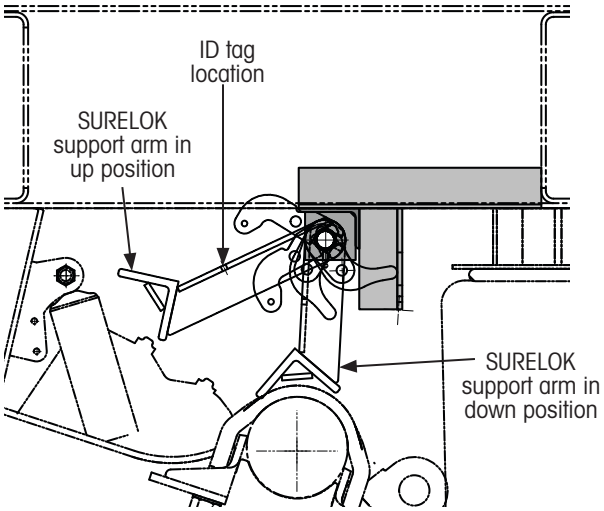

Figure 56: Checking SURELOK support arm rotation

7. **Manually rotate** the SURELOK support arm assembly up and away from the axle.
8. **Verify** the arms are properly aligned over the axle and the support arm assembly rotates freely.

[1] Applicable installation drawings are included with each SURELOK kit and supersede information in this document. For the drawing number, refer to QUICK REFERENCE TABLE on page 6. If unavailable, refer to CONTACTING HENDRICKSON on page 4.

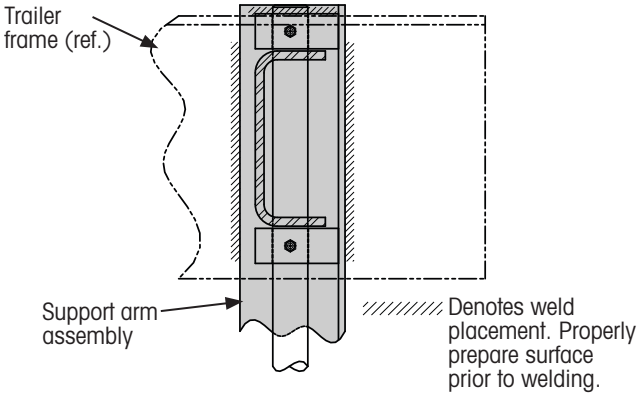

Figure 57: Kit SLKU welds (bottom view)

9. **Remove** temporary clamps and finish welding the SLKU assembly (Figure 57) according to specifications listed in the installation drawing[1]. Adhere to the same welding parameters as presented on APPENDIX A: WELDING DETAILS on page 44.

INSTALLING BRAKE CHAMBER ACTUATOR

With the SLKU assembly is in place, the brake chamber actuator can be installed.

1. **Slide** the brake chamber pushrod through the mounting bracket (Figure 58). **Ensure** the crank arm aligns to the pushrod clevis.
2. **Install fasteners and tighten** the brake chamber mounting nuts (Figure 59) to 33±2 ft. lbs. (45±2 Nm) of torque.
3. **Align** the pushrod clevis with the bottom hole in the crank arm and **insert** the clevis pin (Figure 59).

NOTE: Do not install the cotter pin at this time.

4. Air up the trailer or manually set the axle at the designed **ride height**.
5. **Refer to** the installation drawing and **adjust** the pushrod clevis until the gap for dimension "F" on the drawing is correct.
6. **Secure** the clevis pin with the cotter pin (Figure 59).
7. **Tighten** the jam nut on the pushrod to 55±5 ft. lbs. (79±2 Nm) of torque.

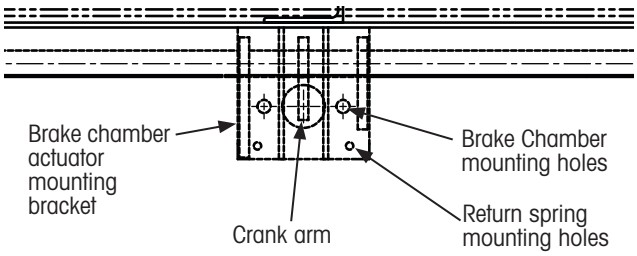

Figure 58: SLKU brake chamber actuator mounting bracket

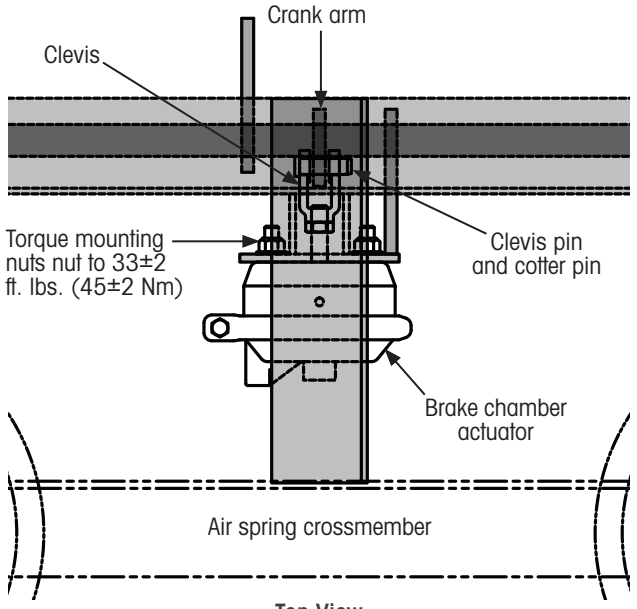

Top View
(Axle not shown for clarity)

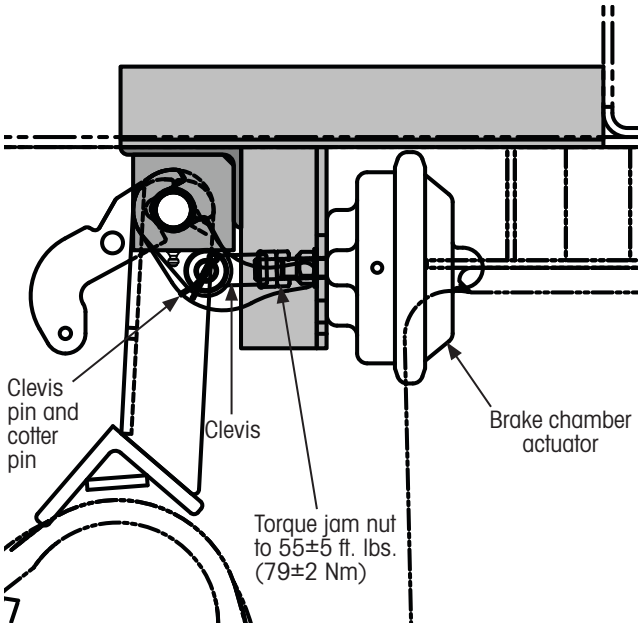

Side view

Figure 59: Brake chamber actuator components.

[1] Applicable installation drawings are included with each SURELOK kit and supersede information in this document. For the drawing number, refer to QUICK REFERENCE TABLE on page 6. If unavailable, refer to CONTACTING HENDRICKSON on page 4.

INSTALLING THE RETURN SPRING.

Use the following procedure to install the return spring.

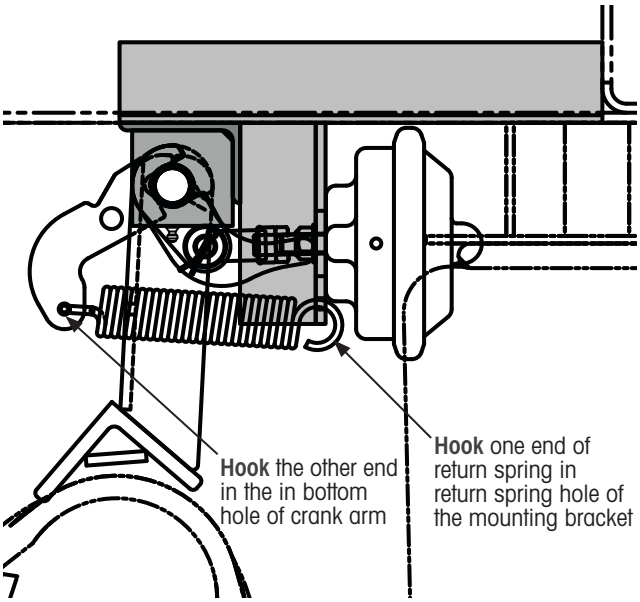

Figure 60: Spring installation details

1. **Hook** one end of the spring to the mounting bracket (Figure 60).
2. **Hook** other end of the spring to the bottom hole in the crank arm.

LUBRICATION

Unlike the other SURELOK® kits, the **SLKU** bearing block includes grease fittings for applying grease to the rotating surfaces of the SURELOK support arm assembly shaft. Each requires NLGI #2 EP chassis lubricant and should be replenished MONTHLY. Always apply grease until fresh lubricant appears at the purge point.

Refer to Hendrickson literature number L578 *Preventive Maintenance Guide* for more general lubrication requirements for Hendrickson suspensions.

INSTALLING AIR LINES AND FITTINGS

After all SURELOK hardware is installed, SURELOK can be plumbed. For plumbing options and details, refer to SECTION V: SURELOK® PLUMBING SCHEMATICS on page 41.

1. If not already installed, **Install** an air line fitting (not included) into the air spring actuator.

NOTE: The threaded connection on the brake chamber actuator is 3/8" - 18 NPTF. D.O.T. tubing and fittings are required but are not included in the kit.

2. **Tighten** fitting to 10±1 ft. lbs. (14±1 Nm) of torque.
3. **Connect** the air line to the air spring actuator.

CHECKING SURELOK OPERATION

With hardware and plumbing installations complete, the SURELOK system can now be tested. For test procedures, refer to SECTION VI: CHECKING SURELOK® OPERATION on page 43 or Hendrickson literature number L498 *SURELOK® Operator's Manual* included with kit.

⚠WARNING: The trailer brakes will be released during testing. Stay clear of the trailer when SURELOK disengages and the trailer rises. Personal injury may occur during trailer movement.

SECTION IV: RETROFITTING STANDARD SUSPENSION BEAMS

If installed as an aftermarket SURELOK® kit, existing suspension beams are likely standard suspension beams which are too short (Figure 61) to extend below the SURELOK lock assembly arms. In this case the specified kit should include beam extensions, which are installed according to the applicable procedure defined in this section and in the included installation drawing[1].

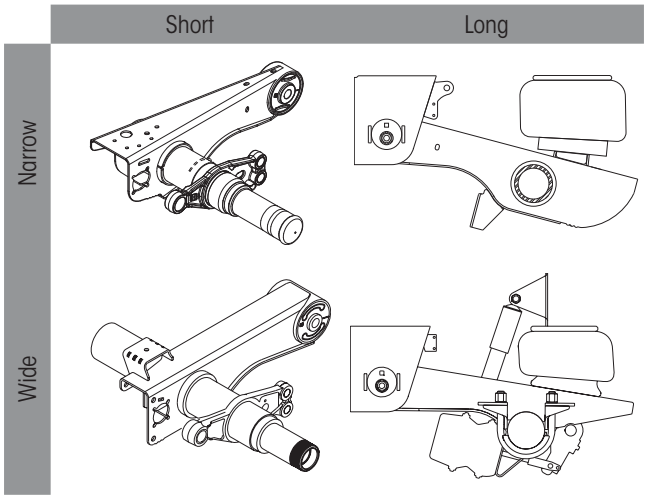

Figure 61: Suspension beam types

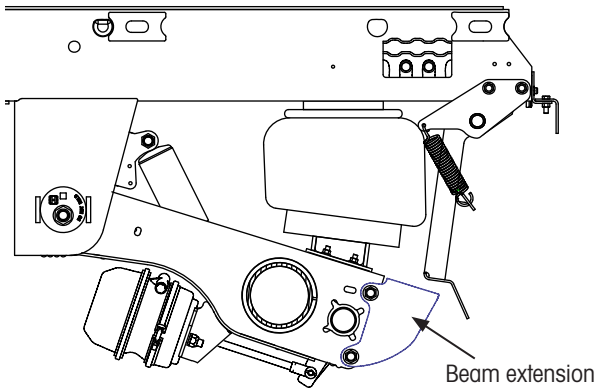

Figure 62: SURELOK assembly with bolt-on beam extensions

The applicable beam extension depends on the type of beam:

BEAM TYPE	SUSPENSION TYPE [4]	EXTENSION TYPE
Narrow bushing (tapered)	AANT, HKANT, UTKNT	Weld-on
Wide bushing (straight)	HT, HKAT	Weld-on
	AAT, HKAT	Bolt-on
4 SURELOK can only be mounted on "top mount" suspension types.		

Table 6: Beam/Suspension types

[1] Applicable installation drawings are included with each SURELOK kit and supersede information in this document. For the drawing number, refer to QUICK REFERENCE TABLE on page 6. If unavailable, refer to CONTACTING HENDRICKSON on page 4.

NARROW SUSPENSION BEAM WELD-ON BEAM EXTENSIONS

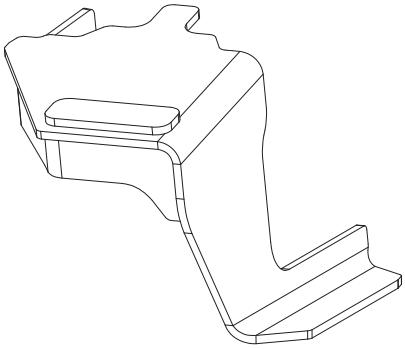

Figure 63: Weld-on rear beam extensions for narrow beam suspension systems

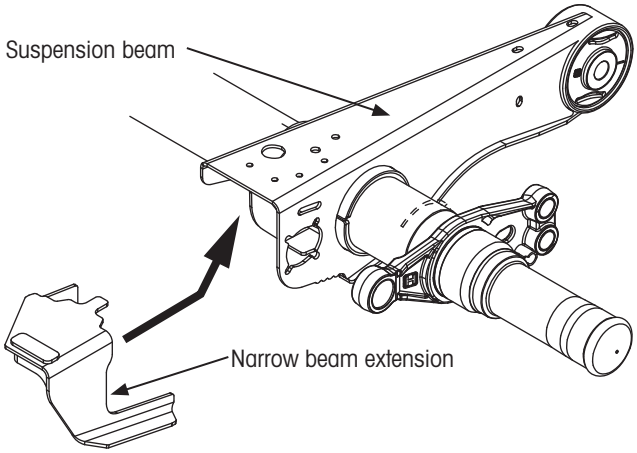

Figure 64: Narrow suspension beam with beam extension

The steps in this procedure apply to all INTRAAX® AANT and VANTRAAX® HKANT narrow bushing suspensions with standard suspension beams (Figure 61 and Figure 64) and no SURELOK currently installed. Applicable suspensions and SURELOK kits include:

MODEL	TYPE	KIT [1]	ARM ASSEMBLY PAGE
INTRAAX	AANT 23K	SLKT	page 26
	AANT 23K HC [2]	SLKW	
ULTRAA-K	UTKNT 40K	SLKAA	page 9
VANTRAAX [3]	HKANT 23K/40K/46K & 69K23	SLKS	page 14
	HKA 180 [4]		
1 These kits include beam extensions, refer to QUICK REFERENCE TABLE on page 6.			
2 High Control applications.			
3 Not applicable for suspensions with Air Disc Brakes (ADB).			
4 Legacy product.			

Table 7: Applicable suspensions with short suspension beams

1. **Prepare** the ends of each rear suspension beam for welding (Figure 65). Using a grinder, remove paint, debris and all foreign material from the ends of each rear suspension beam.

2. **Slide** a beam extension into the end of the rear suspension beam as far as it will go. It is designed to be self positioning. Make sure the entire extension is inside the suspension beam as shown in Figure 64 and Figure 65.

3. Using a C-clamp or other suitable device, **temporarily clamp** the extended tab of the extension to the inside top surface of the suspension beam. The extension must be parallel with the top of the suspension beam (Figure 65).

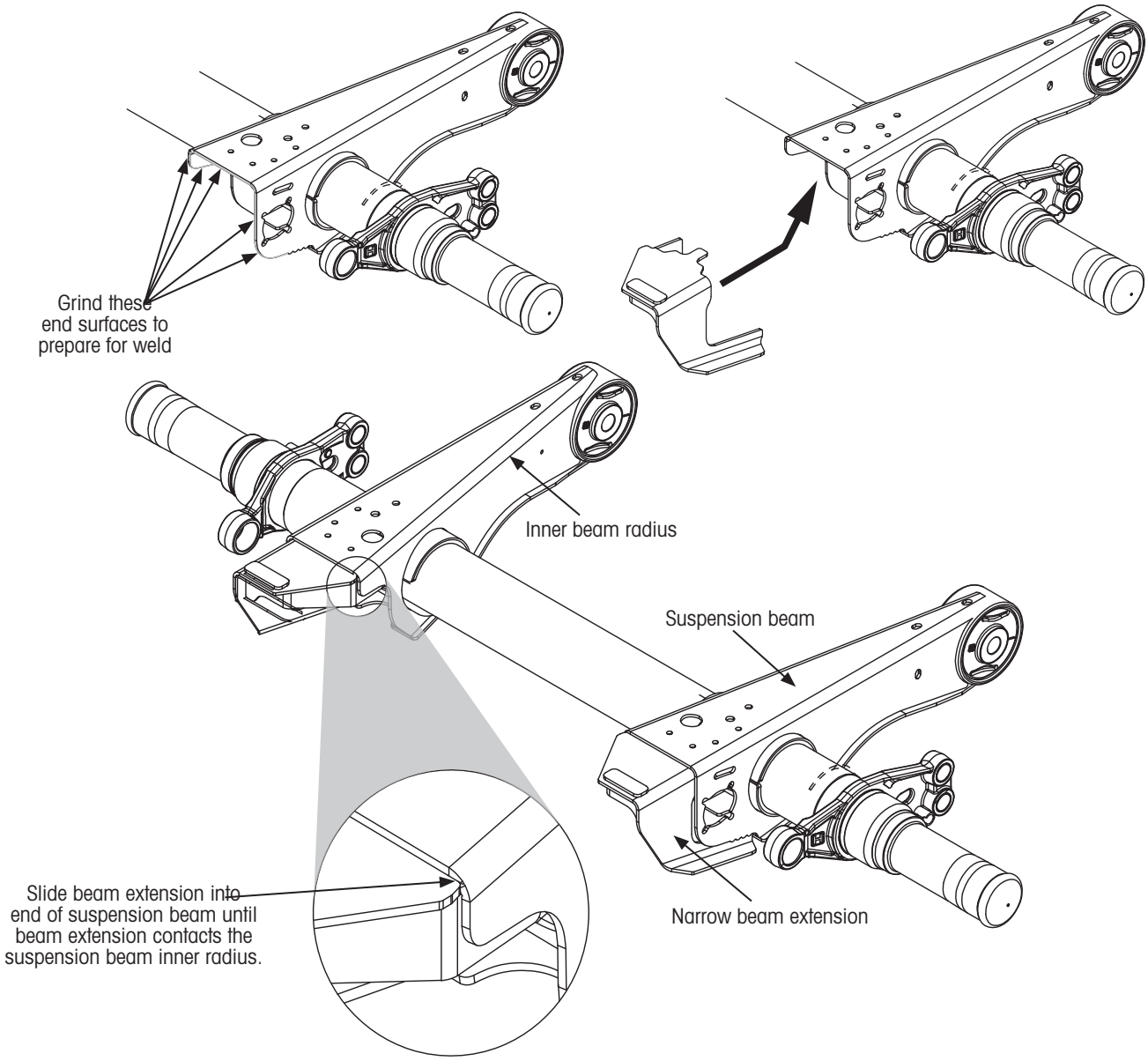

Figure 65: Prepping narrow suspension beams for welding and installing the beam extensions

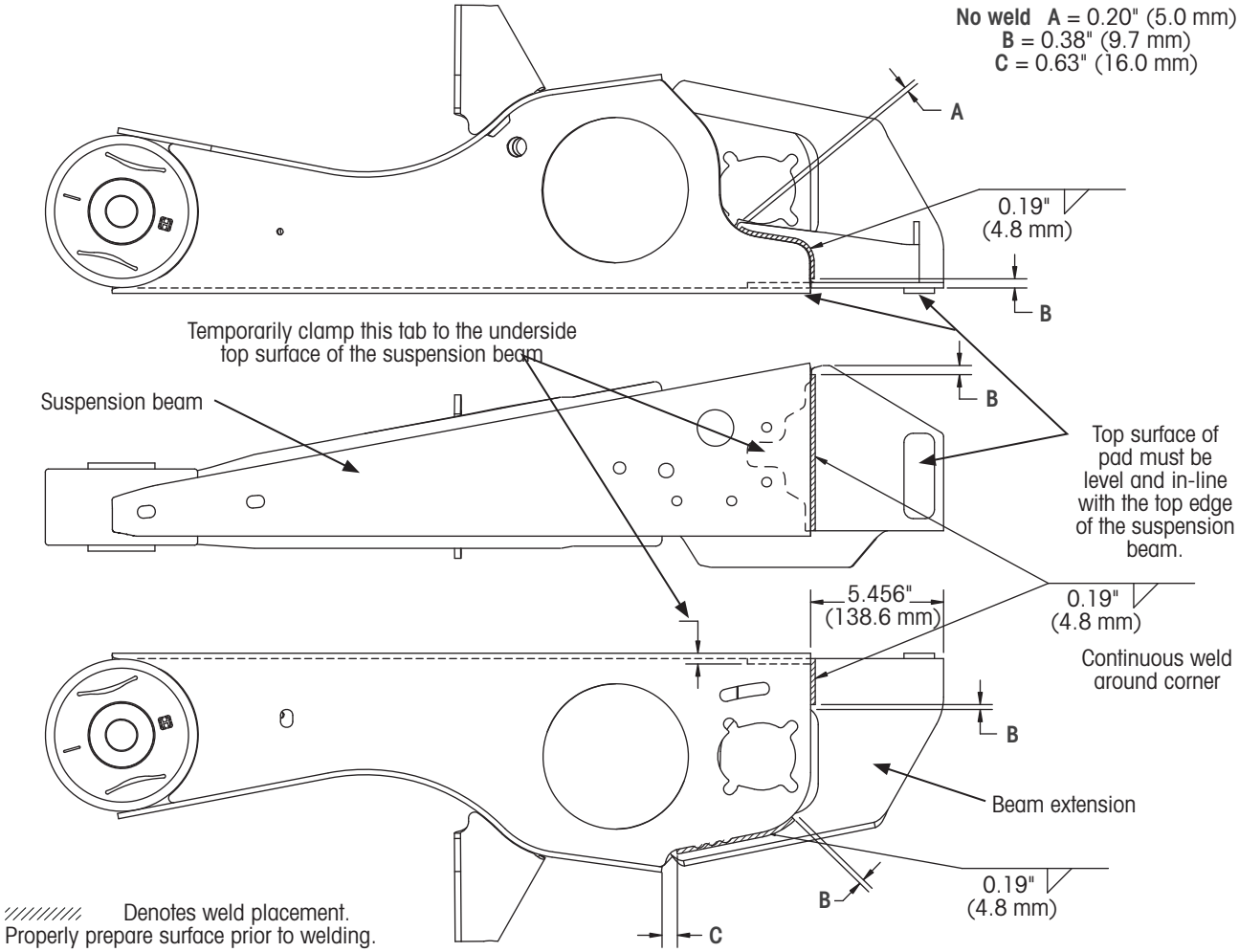

Figure 66: Rear narrow beam extension weld specifications

4. **Referring** to Figure 66, the applicable installation drawing[1] and the weld parameters on APPENDIX A: WELDING DETAILS on page 44; **weld** the extension to the suspension beam as indicated.

5. **Remove** the C-clamp and repeat this procedure on the other suspension beam.

6. **Refer** to Table 7 on page 35 to **select** the proper procedure (page) to **continue** with the kit installation for the support arm assembly.

[1] Applicable installation drawings are included with each SURELOK kit and supersede information in this document. For the drawing number, refer to QUICK REFERENCE TABLE on page 6. If unavailable, refer to CONTACTING HENDRICKSON on page 4.

WIDE SUSPENSION BEAM WELD-ON BEAM EXTENSIONS

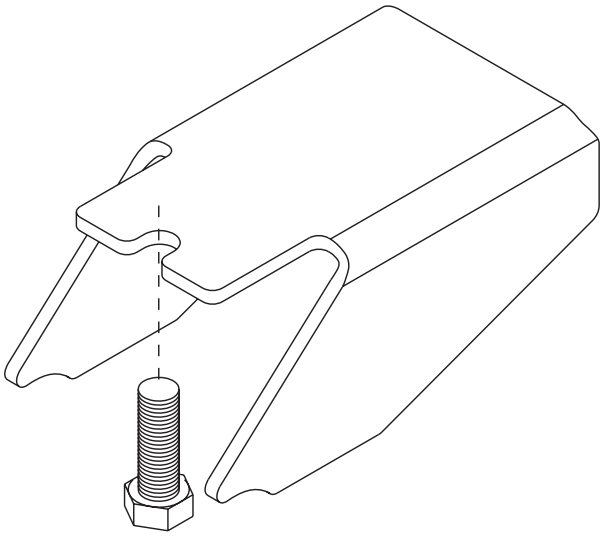

Figure 67: Rear beam extensions for HT™ Series suspensions

The steps in this procedure apply to all HT top-mount suspensions with short suspension beams requiring one of the following SURELOK® kits:

APPLICATION	TYPE	KIT [1]	ARM ASSEMBLY PAGE
Fixed Primary	HT190T, HT230T	SLKA	page 29
HS Slider			page 7
K-2 Slider		SLKR	page 14
		SLKM [3]	page 6
High Control [2]	HC190T, HC230T	SLKQ	page 29

1 These kits include beam extensions, refer to QUICK REFERENCE TABLE on page 6.
2 High Control applications.
3 Legacy product with brake chamber actuator.

Table 8: Applicable suspensions with short suspension beams

Figure 68: Preparing rear suspension beam ends

1. **Prepare** the ends of the rear suspension beams for welding. Using a grinder, remove paint, debris and all foreign material from the ends of the rear suspension beams (Figure 68).

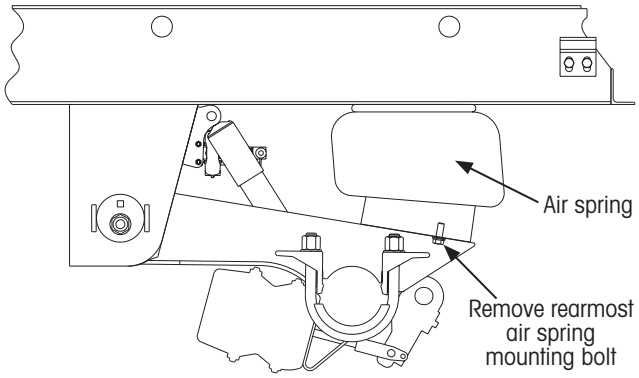

Figure 69: Preparing for rear beam extension installation

2. **Remove and discard** the rearmost air spring mounting bolt (Figure 69) from both rear suspension beams.
3. **Replace** the bolts removed in the previous step with the ½ × 1¼-inch bolts provided in the kit. **DO NOT** fully tighten the bolts at this time.

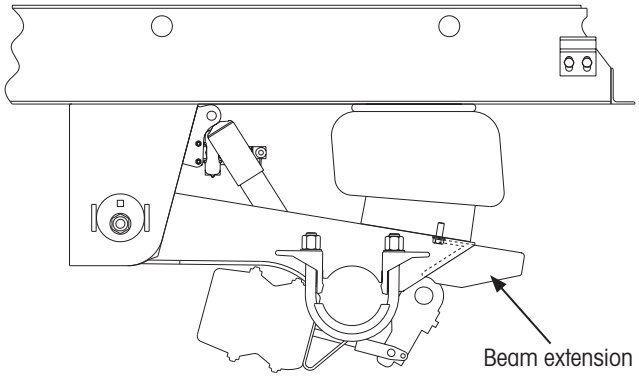

Figure 70: Installing rear suspension beam extension

4. **Slide** a beam extension into the end of each suspension beam (Figure 70) so the notch in the beam extension aligns with and stops against the bolt installed in the previous step.
5. **Align** beam extensions with suspension beams.
6. Tighten bolts to 50±5 ft. lbs. (70±4 Nm) of torque.

Figure 71: Temporarily holding beam extensions in place

7. Using a C-clamp or other suitable device, **temporarily clamp** the beam extensions to the rear suspension beams (Figure 71).

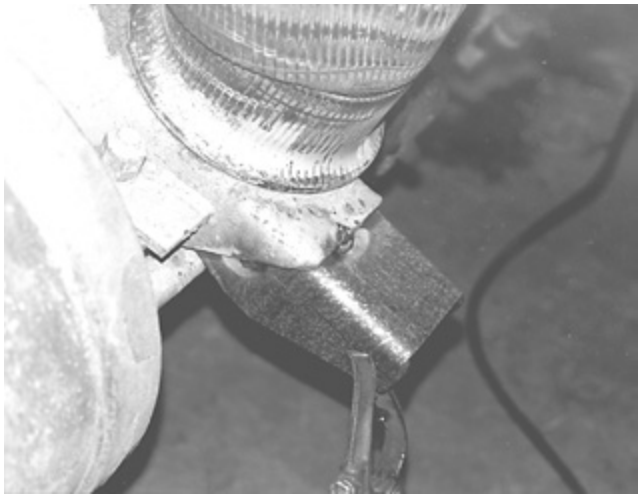

Figure 72: Tack weld rear beam extensions in place

8. **Tack weld** beam extensions into place (Figure 72). After tacking, remove clamps.

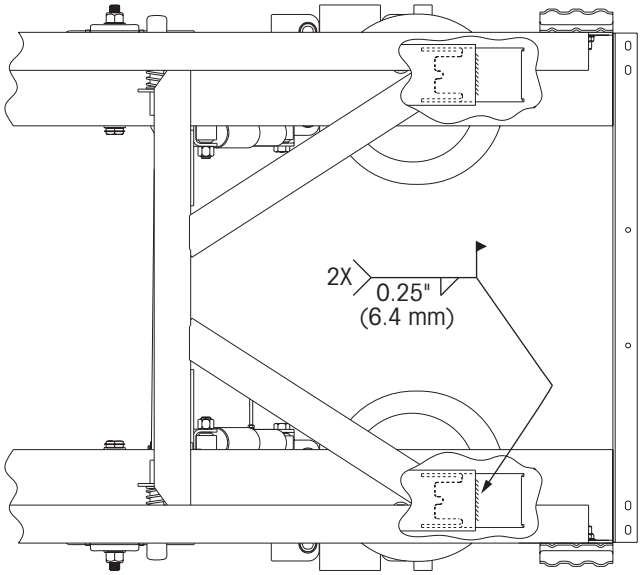

Denotes weld placement.
Properly prepare surface prior to welding.

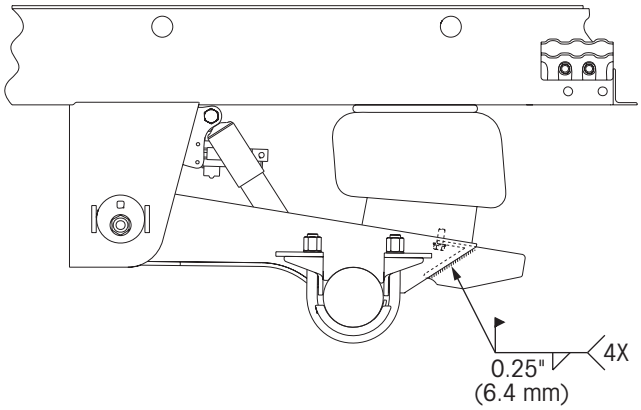

Figure 73: Rear wide beam extension weld specifications

9. **Referring** to Figure 73, the applicable installation drawing[1] and the weld parameters on APPENDIX A: WELDING DETAILS on page 44; **weld** the extension to the suspension beam as indicated.

⚠CAUTION: DO NOT weld around the radius of the suspension beam or beam extension. DO NOT start or stop a weld within 1/8" (3 mm) of the edge of the beam extension.

10. **Refer** to Table 8 on page 38 to **select** the proper procedure (page) to **continue** with the kit installation for the support arm assembly.

[1] Applicable installation drawings are included with each SURELOK kit and supersede information in this document. For the drawing number, refer to QUICK REFERENCE TABLE on page 6. If unavailable, refer to CONTACTING HENDRICKSON on page 4.

WIDE SUSPENSION BEAM BOLT-ON BEAM EXTENSIONS

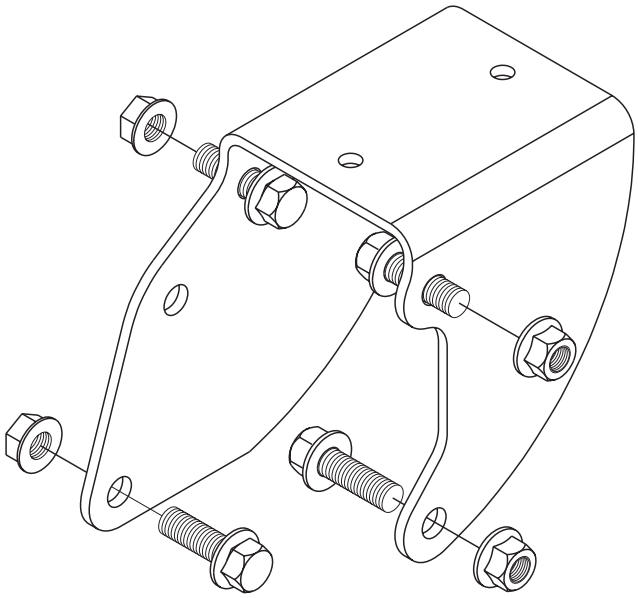

Figure 74: Bolt-on rear beam extensions

The steps in this procedure apply to all INTRAAX® AAT suspensions with short suspension beams requiring one of the following SURELOK® kits:

MODEL	TYPE	KIT [1]	ARM ASSEMBLY PAGE
INTRAAX	AAT 23K [2]	SLKV	page 26
	AAT 23K/25K/30K AA230TC 23K/25K [4]	SLKF [3]	
VANTRAAX	HKAT 46K [4] HKA200C [4]		page 18
	HKAT 50K/69K23/69K25	SLKO [3]	page 15

1 These kits include beam extensions, refer to QUICK REFERENCE TABLE on page 6
2 High Control applications
3 Not applicable for suspensions with Air Disc Brakes (ADB)
4 Legacy products

Table 9: Applicable suspensions with short suspension beams

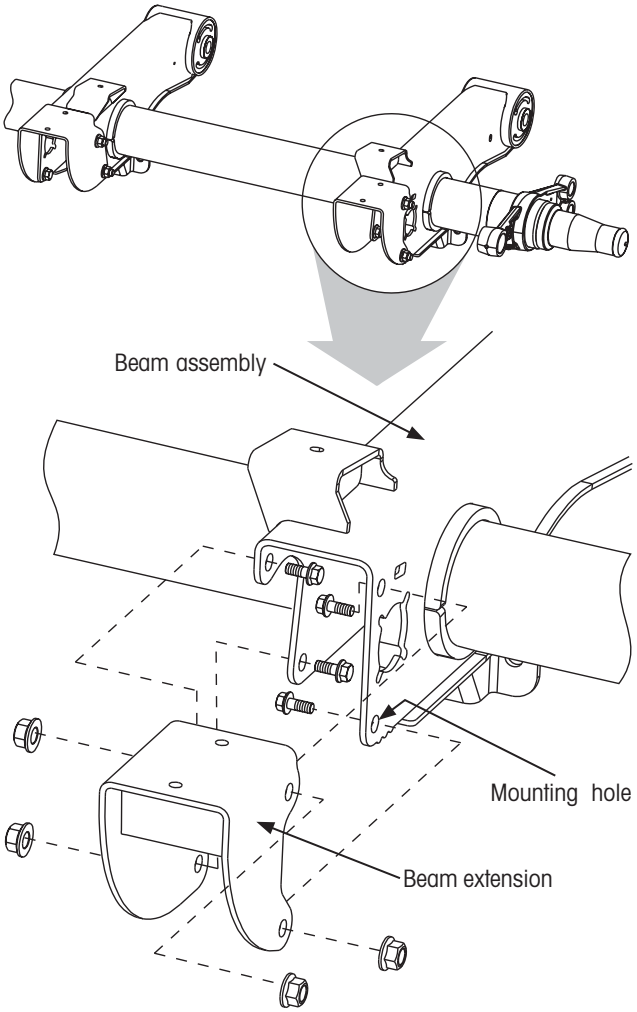

Figure 75: Beam extension installation for HKAT 46K (HKA200), HKAT 50K (HKA250), HKAT 69K23 and HKAT 69K25

1. **Slide** a beam extension over the end of the rear suspension beam as shown in Figure 75.
2. **Align** the holes in the beam extension with the mounting holes in the rear suspension beam.
3. **Install** the four $^5/_8$-inch nuts and bolts, provided with the kit, so the hex heads are on the inside of the beam assembly (Figure 74 and Figure 75) and the nuts are on the outside.
4. **Tighten** the nuts to 210±10 ft. lbs. (285±13 Nm) of torque.
5. **Repeat** procedure on the other rear suspension beam.

SECTION V: SURELOK® PLUMBING SCHEMATICS

When SURELOK is installed on the suspension, an air control kit must also be installed to specify how SURELOK should operate. There currently are five air control kit options for SURELOK. Use the following descriptions and appropriate schematic to plumb the SURELOK kit.

IMPORTANT: DO NOT use Teflon® thread tape on any air system fittings. Contamination may occur.

NOTE: D.O.T. tubing and fittings are required but are not included in the kit. If the SURELOK kit includes a brake chamber actuator, the threaded connection is 3/8" - 18 NPTF. If an air spring actuator, the threaded connection is 1/8 inch - 27 NPTF.

INSTALLING AIR LINES AND FITTINGS

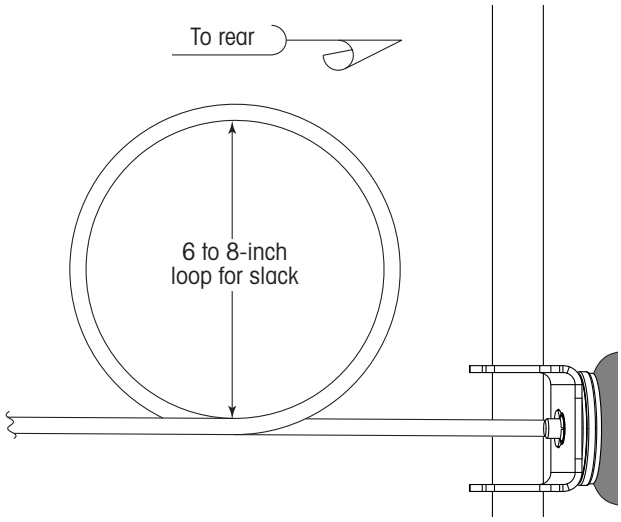

Figure 76: Creating a slack loop in the air line (Applies to K-2® Slider Box SURELOK kits wit air spring actuator)

1. (Applies to K-2® slider box only, Figure 76) **Make** a six to eight inch slack loop in the air line near the front of the actuator.

   NOTICE: In this application, the fitting moves with support arm assembly. The slack loop ensures proper SURELOK operation without damaging the air line and/or air spring actuator.

2. **Reference** the applicable plumbing diagram, Figure 77, Figure 78 or Figure 79, and plumb the trailer according to the control kit option used.

3. **Connect** the applicable air line to the air spring actuator air fitting.

PLUMBING DIAGRAMS

The following plumbing diagrams are common to all SURELOK kit installations.

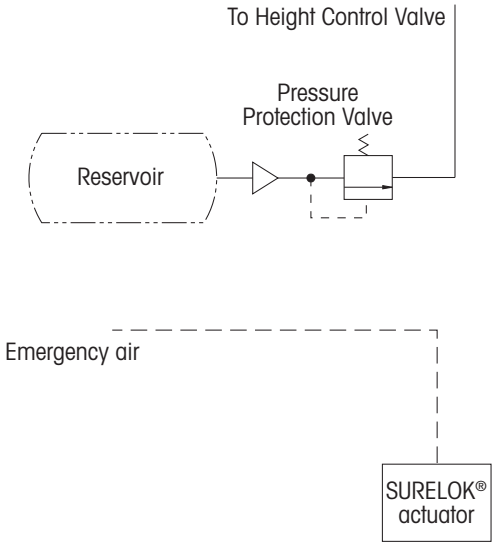

Figure 77: Typical plumbing schematic

No valve included — Standard (typical) operation. With this air control kit (Figure 77), SURELOK engages automatically when the parking brake is applied and disengages automatically when the parking brake is released. No provision is made to bypass SURELOK (there is no bypass valve) and the trailer is not equipped with air suspension exhaust capability (there is no air dump valve).

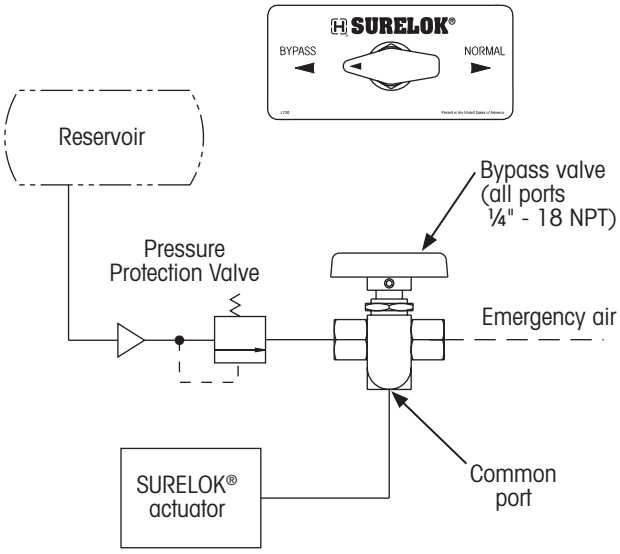

Figure 78: Manual bypass valve plumbing schematic

Manual bypass valve — In addition to standard SURELOK® operation as described above, this air kit allows SURELOK to be completely bypassed, essentially

disconnecting it from the trailer's parking brake system (Figure 78). This bypass operation is accomplished by manually turning a control valve from the **normal** position to the **bypass** position. With SURELOK® bypassed, the suspension can be exhausted onto the internal air spring bumpers using a separate or previously-installed manual air suspension dump valve.

A bypass valve is required when SURELOK is installed on trailers with manual air suspension exhaust capability. On these trailers, exhausting the air suspension is a two step process; first SURELOK must be bypassed, then the air suspension can be exhausted with the manual dump valve.

IMPORTANT: When mounting a bypass valve on a trailer equipped with a slider system, the valve should be mounted on the slider subframe, not on the trailer.

⚠**CAUTION: Mount the bypass valve in a protected but accessible location away from any moving parts.**

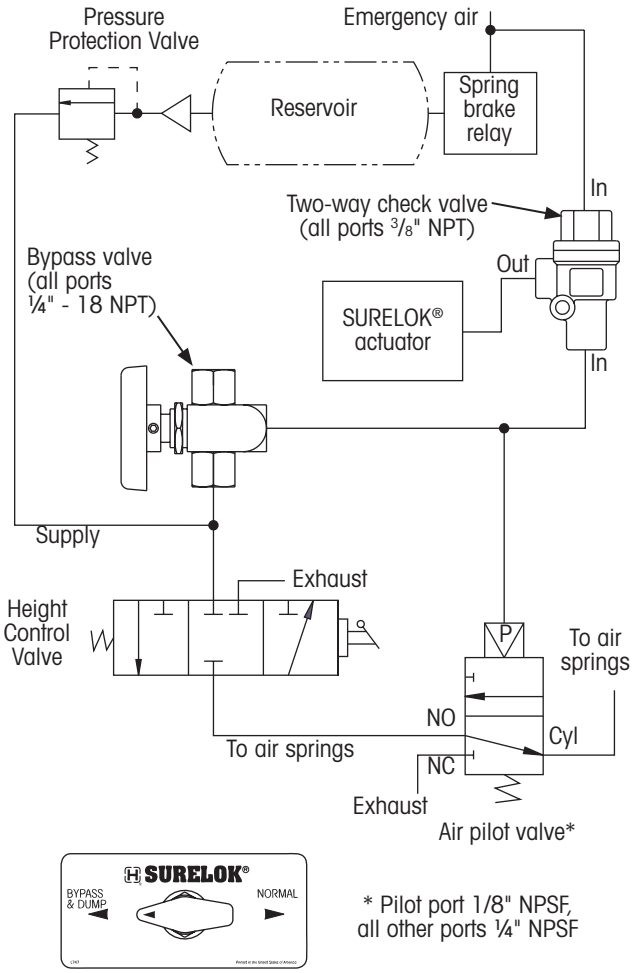

Figure 79: Combination bypass/air dump valve plumbing schematic

Manual bypass with dump — In addition to standard SURELOK operation as described above, this air kit allows SURELOK to be completely bypassed and the suspension exhausted onto the internal air spring bumpers in one convenient step (Figure 79). This simultaneous bypass and exhaust operation is accomplished by manually turning a control valve from the normal position to the bypass and dump position.

IMPORTANT: When mounting a bypass valve on a trailer equipped with a slider system, the valve should be mounted on the slider subframe, not on the trailer.

⚠**CAUTION: Mount the bypass valve in a protected but accessible location away from any moving parts.**

Specialized auto dump — Allows SURELOK to engage automatically when the parking brake is applied and simultaneously exhaust the suspension with the SURELOK support arms in place over the rear suspension beams, allowing the suspension to rest on the SURELOK arms. When the parking brake is released, the air suspension re-inflates and the SURELOK support arms automatically disengage to the neutral position.

Manual bypass & specialized auto dump — Allows SURELOK to engage automatically when the parking brake is applied and simultaneously exhaust the suspension with the SURELOK support arms in place over the rear suspension beams, or allows SURELOK to be completely bypassed. The choice of operation is made by manually turning a control valve.

SECTION VI: CHECKING SURELOK® OPERATION

After all hardware and plumbing installations are complete the system can be tested using the following procedure:

⚠**WARNING: The trailer brakes will be released during this procedure. Stay clear of the trailer when SURELOK® disengages and the trailer rises. Personal injury may occur during trailer movement.**

NOTICE: To avoid suspension damage, DO NOT drive away with the SURELOK arms still engaged. Wait until the trailer air system is completely aired-up to ride height.

Once the parking brake is set, DO NOT continue to back up the trailer. This will cause the suspension beams to rotate about the axle (wheels) and lift the trailer. If there is a need to back up the trailer, release the parking brake.

NOTE: Refer to L498 *SURELOK® Operator's Manual*, available at www.hendricksojn-intl.com/TrailerLit, for complete instructions on how to operate SURELOK.

1. **Fill** the air tank and air springs from a shop air supply or an attached power unit.
2. **Check** all air lines and air connections for leaks.
3. **Check** ride height. **Adjust** if necessary. Refer to L459 *Checking Trailer Ride Height* for details.
4. **Cycle** SURELOK through engagement and disengagement by applying and releasing the trailer parking brakes.
5. **Check** for proper operation:
   A. **Proper movement** from and to engaged and disengaged positions (Example, Figure 23 on page 16).
   B. **When engaged**, the top surface of the support arms are flat against the underside bottom surface of the slider rails or trailer frame, whichever applies. Verify there is **no gap** (Example, Figure 22 on page 16) between the top of each support arm and the slider rail or trailer frame.

NOTICE: While engaged, the shaft of the support arm assembly must not assume any load from the trailer.

6. If installed, **check** for proper operation of the air control kit.

IMPORTANT: If SURELOK fails to operate properly, return to the applicable procedure. Review and verify proper completion of all steps. For additional assistance, refer to CONTACTING HENDRICKSON on page 4.

APPENDIX A: WELDING DETAILS

When welding SURELOK® or the beam extensions in place, use the following parameters to achieve spray arc transfer:

Surface Prep:	The items to be welded must be at a minimum temperature of 60º F (16º C) and must be free of moisture, dirt, scale, paint and grease.
Standard Electrode:	AWS E-7018 (oven dried) .125 diameter 120 - 140 amps DC Electrode positive .156 diameter 120 - 160 amps DC; Electrode positive
Standard Wire:	AWS ER-70S-6; .045 diameter (i.e., LA-56 or NS-115)
Optional Wire:	AWS ER-70S-3; .045 diameter (i.e., LA-50 or NS-101)
Volts:	26 - 30 DCRP
Current:	275-325 amps
Wire Feed Speed:	380 - 420 IPM
Electrode Extension:	1/2 to 5/8 inches
Gas:	86 percent Argon and 14 percent CO_2 at 30 to 35 CFH

IMPORTANT: Any deviation from these welding parameters must be approved, in writing, by Hendrickson Trailer Commercial Vehicle Systems.

*Call Hendrickson at **866.RIDEAIR (743.3247)** for additional information.*

HENDRICKSON®

www.hendrickson-intl.com

TRAILER COMMERCIAL VEHICLE SYSTEMS
2070 Industrial Place SE
Canton, OH 44707-2641 USA
866.RIDEAIR (743.3247)
330.489.0045 • Fax 800.696.4416

Hendrickson Canada
250 Chrysler Drive, Unit #3
Brampton, ON Canada L6S 6B6
800.668.5360
905.789.1030 • Fax 905.789.1033

Hendrickson Mexicana
Circuito El Marqués Sur #29
Parque Industrial El Marqués
Pob. El Colorado, Municipio El Marqués,
Querétaro, México C.P. 76246
+52 (442) 296.3600 • Fax +52 (442) 296.3601

L715 Rev E 02-17 ECN 24791 Rev D 02-12 ECN 20445 Rev C 08-10 ECN 19054 Rev B 08-05 ECN 14268 Rev A 12-01

Information contained in this literature was accurate at the time of publication. Product changes may have been made after the copyright date that are not reflected. © 2017 Hendrickson USA, L.L.C. All Rights Reserved Printed in United States of America