This Field Service Bulletin replaces bulletin “Shock Absorber, Inspection“, (USA137956154) PV729–FSB761-002_V, dated 10/2016.

Shock Absorber, Inspection
VN, VAH, VHD, VT

FSB 761-002, Shock Absorber, Inspection

(October 2017)

VOLVO VN, VAH, VHD, and VT trucks require a visual shock absorber inspection during regular maintenance schedules. The visual inspection will include checking the shock absorber for leakage, any irregularities, or worn shock bushings. During regular maintenance schedules, use this bulletin to determine if the shock absorber meets or does not meet the inspection criteria for warranty replacement of the shock absorber if needed.

Shock Absorber, Inspection

You must read and understand the precautions and guidelines in Service Information, group 70, "General Safety Practices, Frame, Springs, Shocks & Wheels" before performing this procedure. If you are not properly trained and certified in this procedure, ask your supervisor for training before you perform it.

DANGER

Do not attempt to repair or service this vehicle without having sufficient training, the correct service literature and the proper tools. Failure to follow this could make the vehicle unsafe and lead to serious personal injury or death.

1 Park the vehicle on a level surface.
2 Apply the parking brake.
3 Place the transmission in neutral or park.
4 Install the wheel chocks.

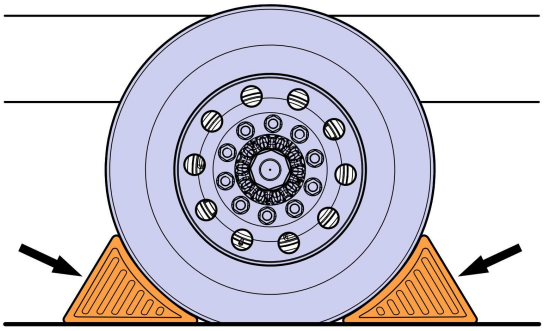

W7086748

5 Disconnect the cable from the battery's negative terminal.

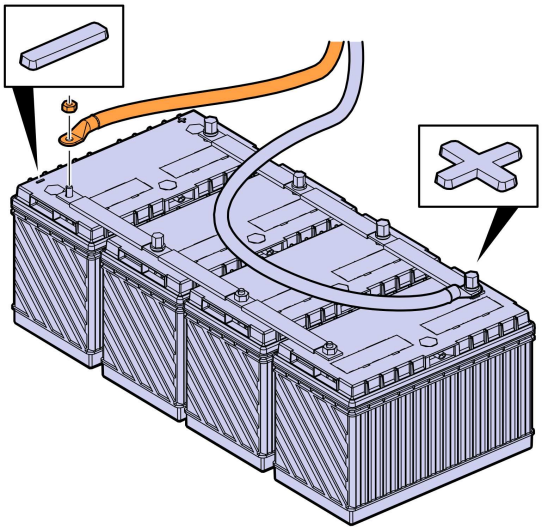

W3086747

6 The visual inspection will include checking the shock absorber for leakage, any irregularities, or worn shock bushings.

Not Accepted as Warranty Failure			
SYMPTOM: **Misting** Precipitation of oil mist on the outside of the shock is visible. Appearance may be deceptive.	**Light Misting**	**Medium Misting**	**Heavy Misting**
Cause: High operating temperatures results in oil mist and precipitation. A certain degree of vapor is therefore normal and actually a necessity for the lubrication of the rod seal.	Light Oil Film on the Upper Shock Body **NO Action Required** **Do Not Remove**	Medium Oil Film on Upper Half of the Shock Body **NO Action Required** **Do Not Remove**	Heavy Oil Film Extending to the Bottom of the Shock Body **NO Action Required** **Do Not Remove**
Note: The inspection must not be conducted after driving in wet weather or a vehicle wash. Shock needs to be free from water.	 W7128505	 W7128506	 W7128507
INSPECTION: **Finger Test** **WARNING** Allow the shock absorber to cool after operation. The shock absorber may be hot to the touch and cause personal injury. After the complete extension of the shock, touch the upper area of the reservoir tube (smaller diameter) with a dry finger. If the finger remains dry, the shock is not leaking. If in doubt, wipe the shock clean and check again after a few days of operation. If oil is only visible around the bottom it likely comes from an outside source.			

Accepted as Warranty Failure

SYMPTOM:
Leakage

Symptoms of leakage include loss of oil, loss of the damping function or loss of ride control of the vehicle. The reservoir tube (smaller diameter) is predominantly covered with oil.

Cause:

Damaged or overheated seal.

INSPECTION:

WARNING

Allow the shock absorber to cool after operation. The shock absorber may be hot to the touch and cause personal injury.

The shock is considered as a leaker if a dry finger gets wet of oil when touching the shock at the upper area of the reservoir tube (as in previous “Finger Test”).

After the finger test, the shock can exhibit a glossy film of oil / dirt, or an oil droplet formation on the reservoir tube.

ACTION:

Replace leaking shock.

Leaking

Oil Leak Path Lines Visible on the Shock Body
Action Required
Replace Shock Absorber

W7128508

7 Connect the cable to the battery's negative terminal.

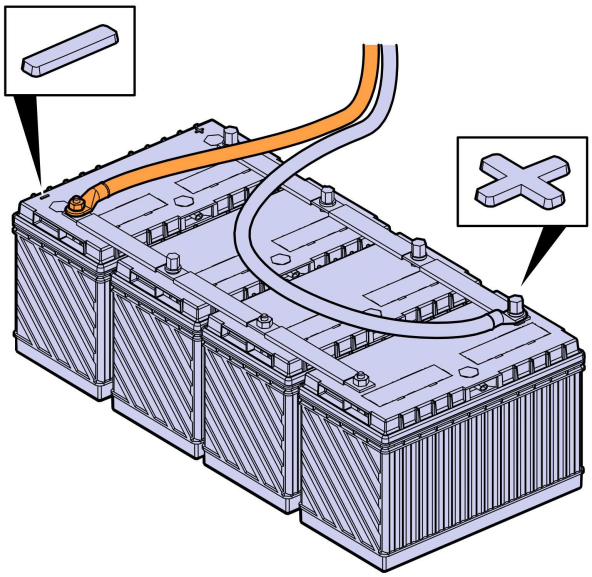

W3086758

8 Remove the wheel chocks.

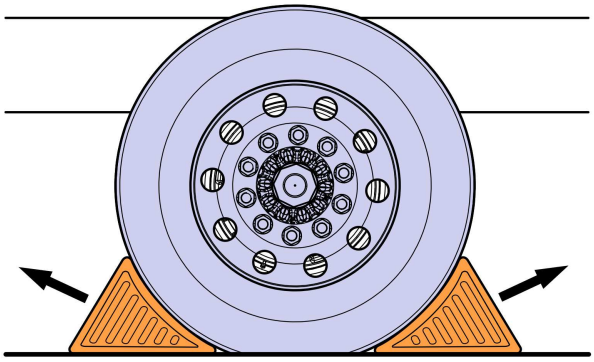

W7086759