Technical Service Bulletin

Mazda North American Operations
Irvine, CA 92618-2922

Subject: DRIVERS SEAT CUSHION TRIM COMES OFF SEAT FRAME (POWER SEATS ONLY)	**Bulletin No.:** 09-033/17
	Last Issued: 07/27/2017

DESCRIPTION

APPLICABLE MODEL(S)/VINS

2013-2016 CX-5 vehicles equipped with power seats with VINs lower than JM3KE******921725 (produced before December 21, 2016)

Some vehicles may have a condition where the front of the drivers seat cushion trim comes off the seat frame (as shown below). This is found on vehicles equipped with power seats and leather, leatherette or cloth type seat trim.

The front seat cushion is attached to the seat frame using a folding collar. The collar may slip out of the seat frame when force is applied to the front of the seat cushion.

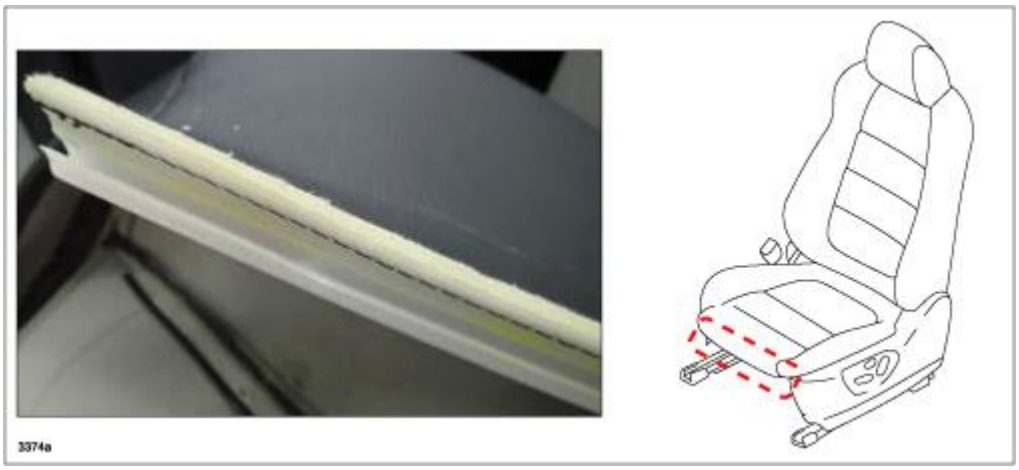

Customers having this concern should have their vehicle repaired using the following repair procedure.

REPAIR PROCEDURE

1. Verify the customer concern.

CONSUMER NOTICE: The information and instructions in this bulletin are intended for use by skilled technicians. Mazda technicians utilize the proper tools/ equipment and take training to correctly and safely maintain Mazda vehicles. These instructions should not be performed by "do-it-yourselfers." Customers should not assume this bulletin applies to their vehicle or that their vehicle will develop the described concern. To determine if the information applies, customers should contact their nearest authorized Mazda dealership. Mazda North American Operations reserves the right to alter the specifications and contents of this bulletin without obligation or advance notice. All rights reserved. No part of this bulletin may be reproduced in any form or by any means, electronic or mechanical---including photocopying and recording and the use of any kind of information storage and retrieval system ---without permission in writing.

© 2017 Mazda North American Operations, U.S.A.

NOTE: It is not necessary to remove the seat trim from the seat frame, nor is it necessary to remove the seat assembly from the vehicle.

2.Using an appropriate drill or soldering iron, make two (2) 4 mm diameter holes through both sides of the edge of the finisher trim (holes are shown below as circles).
CAUTION: When making the holes, be careful not to damage the wire harness.

The lower hole (A) is 20 mm from the side edge and 15 mm from the bottom edge.
The upper hole (B) is 27 mm above the lower hole.

NOTE: Lengths are measured from the center of each hole.

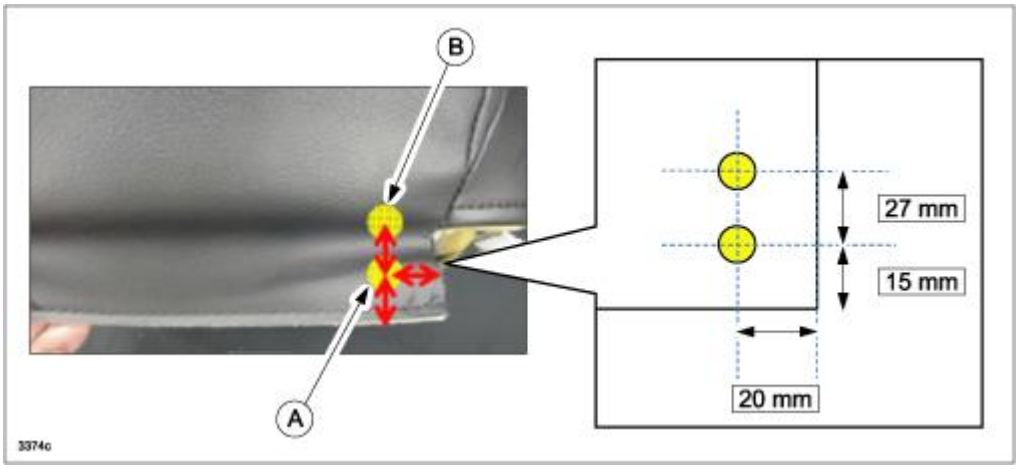

3.Insert a cable tie from the upper hole (B) and pass it through to the bottom hole (A) wrapping the back rod (as shown below).

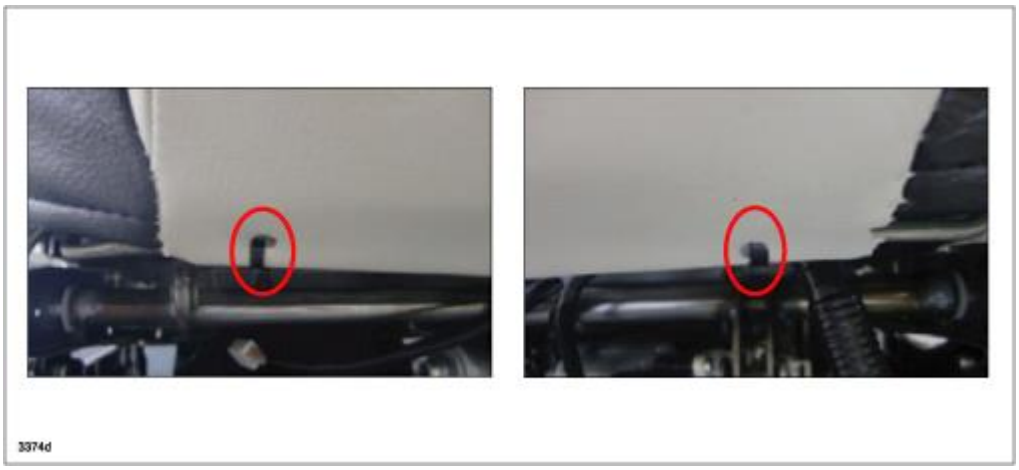

CONSUMER NOTICE: The information and instructions in this bulletin are intended for use by skilled technicians. Mazda technicians utilize the proper tools/ equipment and take training to correctly and safely maintain Mazda vehicles. These instructions should not be performed by “do-it-yourselfers.” Customers should not assume this bulletin applies to their vehicle or that their vehicle will develop the described concern. To determine if the information applies, customers should contact their nearest authorized Mazda dealership. Mazda North American Operations reserves the right to alter the specifications and contents of this bulletin without obligation or advance notice. All rights reserved. No part of this bulletin may be reproduced in any form or by any means, electronic or mechanical---including photocopying and recording and the use of any kind of information storage and retrieval system ---without permission in writing.

© 2017 Mazda North American Operations, U.S.A.

NOTE: When wrapping the back rod, move the hook in the order of arrows (1) and (2) shown below, then install the front seat cushion trim to the front seat cushion frame.

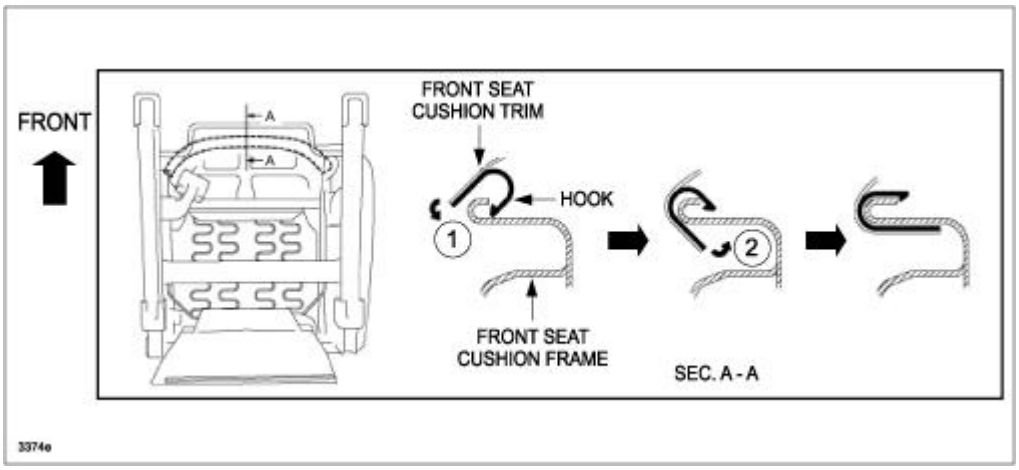

4.Tie up tightly and cut off the excess band.
5. Move the head of the cable ties behind the trim, then attach the felt pads (A) on the two (2) cable ties.

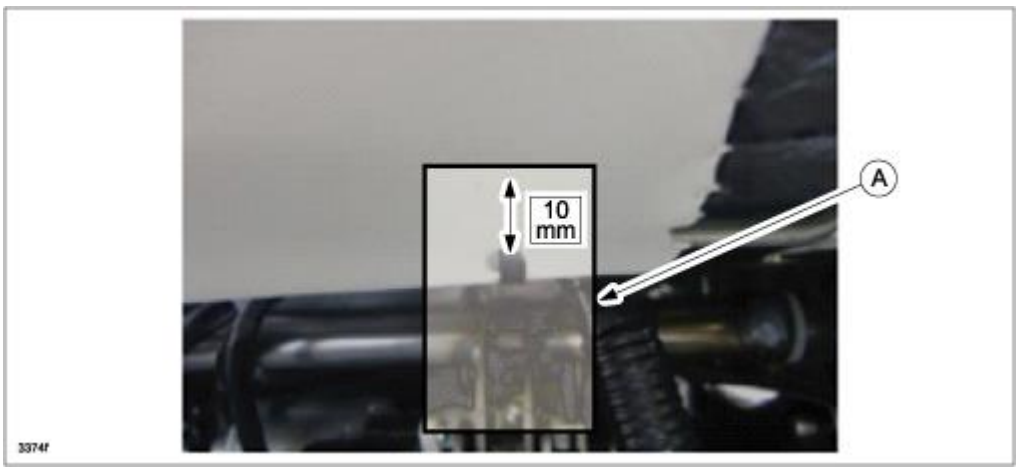

5. Verify repair.

NOTE: The image below shows a finished seat.

CONSUMER NOTICE: The information and instructions in this bulletin are intended for use by skilled technicians. Mazda technicians utilize the proper tools/ equipment and take training to correctly and safely maintain Mazda vehicles. These instructions should not be performed by “do-it-yourselfers.” Customers should not assume this bulletin applies to their vehicle or that their vehicle will develop the described concern. To determine if the information applies, customers should contact their nearest authorized Mazda dealership. Mazda North American Operations reserves the right to alter the specifications and contents of this bulletin without obligation or advance notice. All rights reserved. No part of this bulletin may be reproduced in any form or by any means, electronic or mechanical---including photocopying and recording and the use of any kind of information storage and retrieval system ---without permission in writing.

© 2017 Mazda North American Operations, U.S.A.

PARTS INFORMATION

Parts Number	Description	Qty.	Notes
H380-88-225	Band	2	---
U009-88-0A9 52	Pad Spacer	2	Felt pad

WARRANTY INFORMATION

NOTE:
• This warranty information applies only to verified customer complaints on vehicles eligible for warranty repair.
• This repair will be covered under Mazda's New Vehicle Limited Warranty term.
• Additional diagnostic time cannot be claimed for this repair.
• This TSB can be performed by D329 Mazda Certified Lube Technicians.

Warranty Type	A
Symptom Code	73
Damage Code	9B
Part Number Main Cause	U009-88-0A9 52
Quantity	2
Operation Number / Labor Hours:	XXN6KXRX / 0.2 Hrs.
TSB can be performed by D329 Mazda Certified Lube Technicians:	Yes

CONSUMER NOTICE: The information and instructions in this bulletin are intended for use by skilled technicians. Mazda technicians utilize the proper tools/ equipment and take training to correctly and safely maintain Mazda vehicles. These instructions should not be performed by "do-it-yourselfers." Customers should not assume this bulletin applies to their vehicle or that their vehicle will develop the described concern. To determine if the information applies, customers should contact their nearest authorized Mazda dealership. Mazda North American Operations reserves the right to alter the specifications and contents of this bulletin without obligation or advance notice. All rights reserved. No part of this bulletin may be reproduced in any form or by any means, electronic or mechanical---including photocopying and recording and the use of any kind of information storage and retrieval system ---without permission in writing.

© 2017 Mazda North American Operations, U.S.A.

NOTE: Claim Band (H380-88-225, Q'ty = 2) as related parts.
NOTE: This bulletin only applies to vehicles equipped with tilt and power seats.

CONSUMER NOTICE: The information and instructions in this bulletin are intended for use by skilled technicians. Mazda technicians utilize the proper tools/ equipment and take training to correctly and safely maintain Mazda vehicles. These instructions should not be performed by "do-it-yourselfers." Customers should not assume this bulletin applies to their vehicle or that their vehicle will develop the described concern. To determine if the information applies, customers should contact their nearest authorized Mazda dealership. Mazda North American Operations reserves the right to alter the specifications and contents of this bulletin without obligation or advance notice. All rights reserved. No part of this bulletin may be reproduced in any form or by any means, electronic or mechanical---including photocopying and recording and the use of any kind of information storage and retrieval system ---without permission in writing.

© 2017 Mazda North American Operations, U.S.A.