Field Service Bulletin

Side Mount CNG System Rubber Isolator Removal and Replacement 257 and 267 Series

ENP-587

September 1, 2017

1. Introduction

Type 3 and Type 4 CNG fuel cylinders used in natural gas fuel systems expand and contract in normal operation. Mounting systems must compensate for these changes in order to keep the cylinders attached to the fuel system frame and the vehicle chassis.

In side-mounted systems, rubber isolators are used to allow movement as well as dampen vibration in normal vehicular use. Inspection and maintenance – and replacement of the rubber components – is necessary to maximize system safety and lifetime.

This bulletin will be helpful when isolator replacement is needed. These instructions are based on the 40 DGE right side system 25789600 (aluminum covers, no fuel management module). Other systems are essentially the same, and may use these procedures.

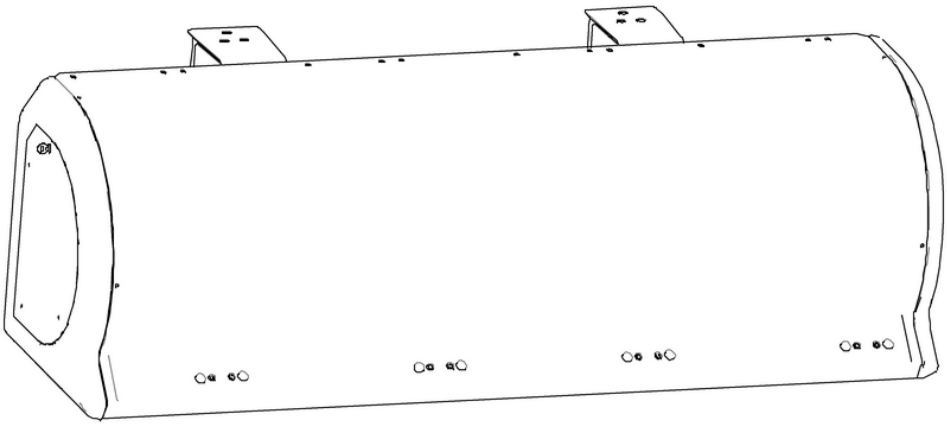

Figure 1. 257 series side mounted CNG fuel system. 45 DGE system 25789600 shown.

Warning Messages Used in this Bulletin

⚠ WARNING

Personal injury or death <u>may</u> occur if procedures are not followed.

⚠ CAUTION

Damage to equipment, fuel system or vehicle is possible if instructions are not followed.

2. Affected Units

Agility Fuel Solutions 257- and 267- series side mount systems (with aluminum covers and plastic end caps).

3. Corrective Action

Inspect the system mounting brackets, straps and isolators for wear or damage and replace as needed. This is a maintenance procedure.

4. Tools and Materials

- Personal protective equipment (PPE), including eye and hearing protection as needed
- Utility knife to trim the rubber isolator, if needed
- Scraper or pry bar to help remove worn isolator (as needed)
- Isopropyl alcohol to prepare and clean mounting surfaces
- Abrasive (sandpaper or wire brush) to abrade rubber or bracket, if needed
- Plastic or flexible non-metallic putty knife to spread adhesive
- Specialty 3M two-part adhesive as specified below, see safety sheet attached

The bill of materials list below is for **one cylinder** of side mount systems (one for each side of the vehicle).

QTY.	UNIT OF MEASURE	AGILITY PART NUMBER	DESCRIPTION
2	Each	25700120	Raw material, strap rubber extrusion, 4.075-in. (Cylinder strap rubber isolator)
2	Each	21000149	Raw material, strap rubber extrusion, 4.375-in. x 0.779-in. (Bracket rubber isolator)
1	Each	10802114	3M™ Scotch-Weld™ Urethane Adhesive DP620NS Black, 50 mL
--	--	--	Isopropyl alcohol or acetone for cleaning
12	Each	10712230	Belleville washer, 5/8-in.
2	Each	10712227	Flat washer, 5/8-in. USS, 18-8 SS, replace if needed
2	Each	10712225	Bolt, 5/8-11 x 8-in., Grade 9, replace if needed
2	Each	10712226	Nylon lock nut, 5/8-11, Grade 8, replace if needed
2	Each	10712370	Flat washer, 5/8-in., Grade 8, replace if needed
1	Each	25700133	Anti-spin bracket – if needed

⚠ WARNING **⚠ CAUTION**

A. Use proper lifting techniques to prevent injuries.

B. This procedure requires cylinder component work - depressurize and <u>defuel</u> the system before performing work.

C. Refer to "Safely Working on CNG Fuel Systems," ENP-391 and "Service Facility Fuel Handling Equipment," ENP-380, for more information on defueling, fuel transfer and temporary fuel supplies.

D. If possible, consume the fuel as much as possible (run the engine or vehicle) to reduce the amount of fuel vented to the atmosphere.

5. Procedure: Remove the System Covers

5.1 Depressurize

1. Make sure all cylinder valves are fully closed.
2. Turn the red-handle main shutoff valve to the ON/OPEN position.
3. Close the FMM door (if equipped), and start and run the engine until it stalls.
4. Check the low pressure gauge to make sure it reads zero psi.
5. Turn the ignition off, and remove the key. Follow any other vehicle lock-out procedures.
6. Access the bleed valve (usually inside the FMM housing) and open it slowly using an open end wrench to relieve remaining pressure in the system.

5.2 Defuel

1. Connect a ground wire from the vehicle to the vent stack system.
2. Attach the defuel hose to the vent stack system.
3. Attach the defuel nozzle to the defuel receptacle on the FMM.
4. Ensure the manual shutoff valve is ON/OPEN.
5. Slowly open the defuel valve, and adjust for a slow and steady flow to avoid freezing.
6. Close the bleed valve. The system is now ready for service.

6. Remove the System Covers and Plumbing Parts

1. Refer to Figures 2 through 6. The side mounted system can remain on the vehicle chassis.
2. Remove any steps and the one piece front cover from the system. The three rear covers can remain in place.

3. The system can remain in place on their Drop-N-Go™ J-brackets.
4. Disconnect plumbing lines and components from the cylinder as shown in Figure 4.

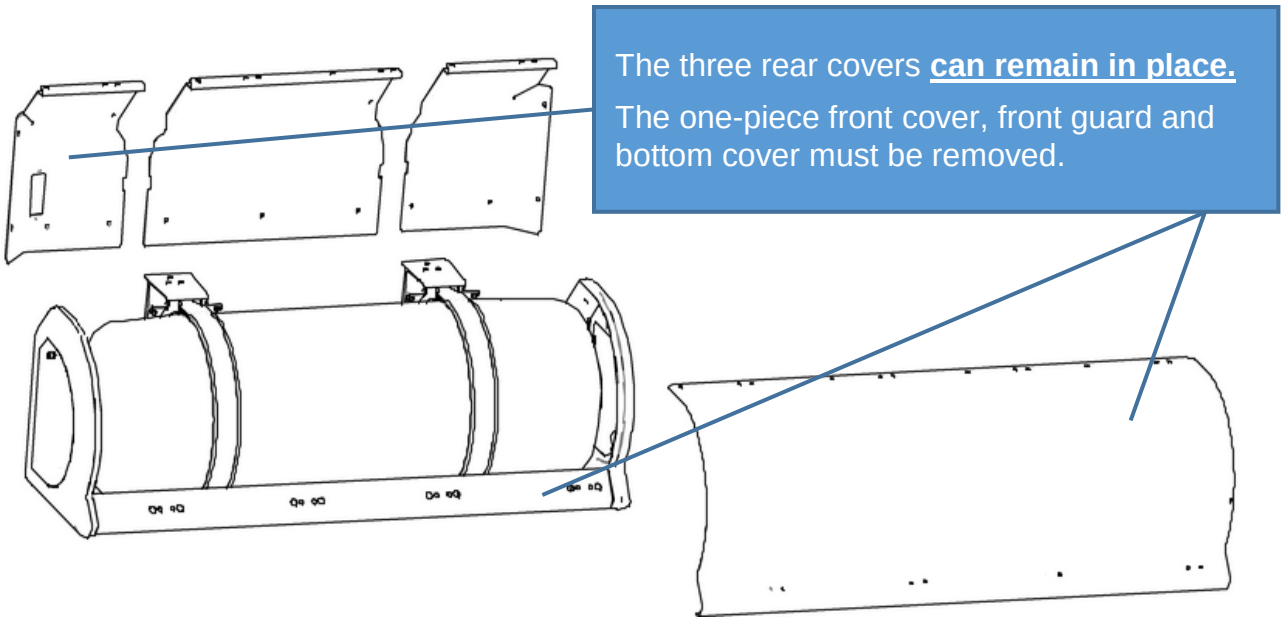

Figure 2. Remove the one piece front cover.

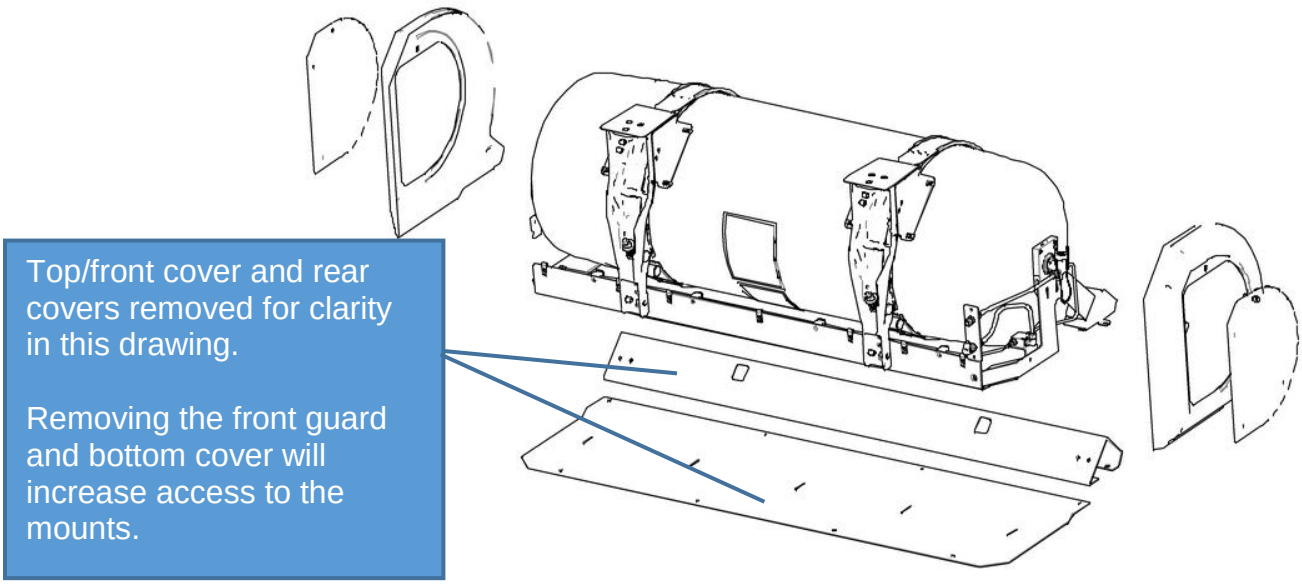

Figure 3. The three rear covers and the end door plates and covers are removed to access the cylinder mounts and manual cylinder valve. The bumper bar and the cylinders must also be removed. System 25789600 shown, other 257- and 267- systems are similar.

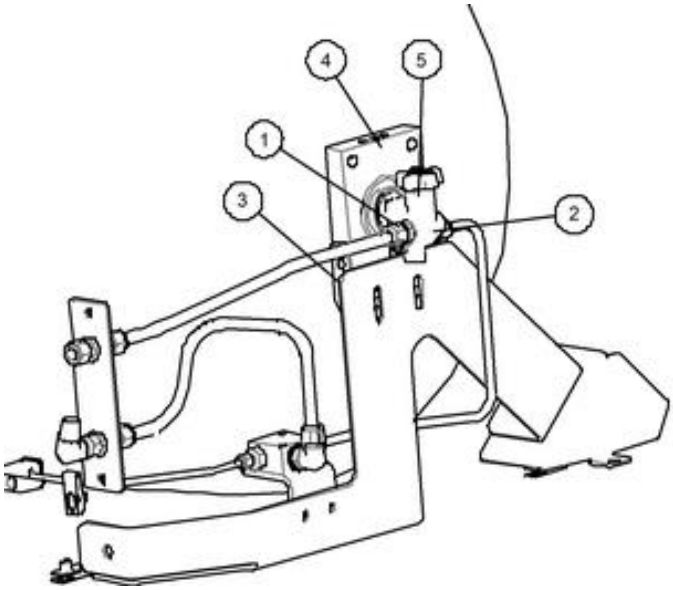

Figure 4. Remove the cylinder-mounted components: The two fittings (1) and (2), anti-spin bracket (3), neck block (4) and valve (5). Replace the anti-spin bracket if needed.

7. Remove and Replace Rubber Isolator

1. Working under the vehicle, observe the number and orientation of the Belleville washers on the J-bracket. These are special washers that provide tension on the straps and allow cylinder expansion and contraction.
2. Loosen the lock nut from the Grade 9 bolt as shown in Figures 5 and 6.

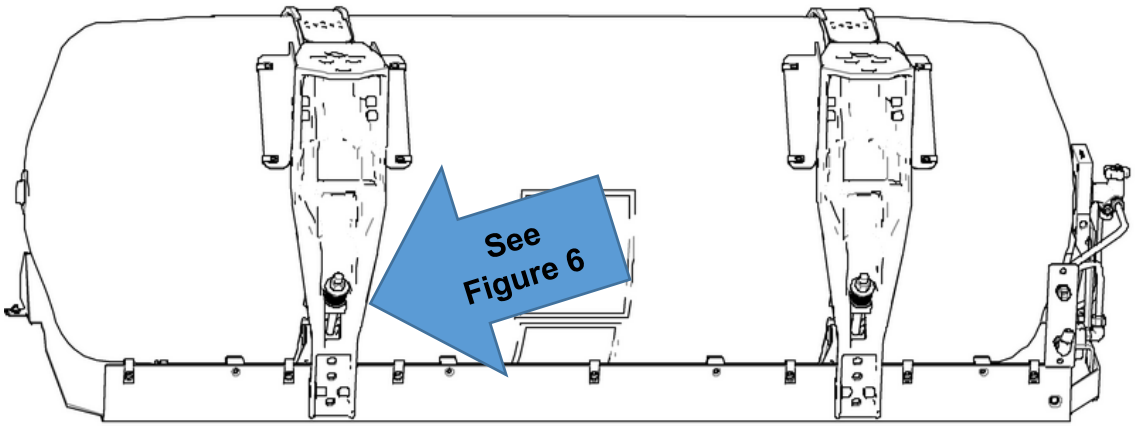

Figure 5. Observe the number and the "cup" direction of the Belleville washers on the J-brackets. These are not standard flat washers, but are special spacers that create spring tension against the mounting system. NOTE: The three rear covers are removed to improve clarity. They can remain in place for this procedure.

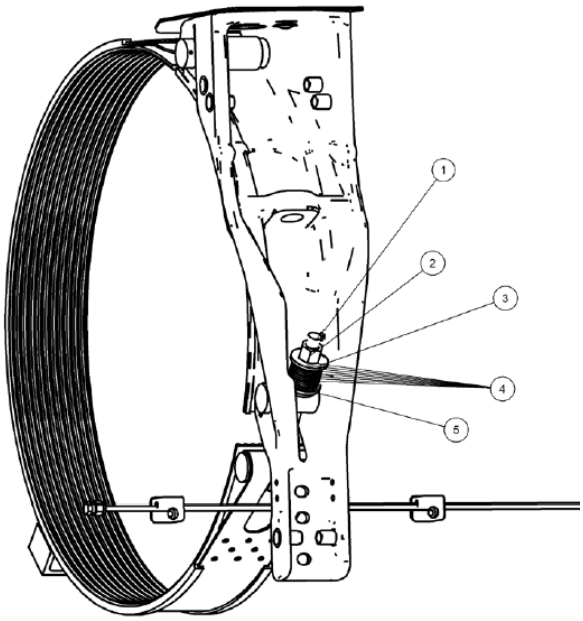

ITEM	PART NUMBER	DESCRIPTION
1	10712225	BOLT, 5/8-11 X 8-IN., GRADE 9
2	10712226	NYLON LOCK NUT, 5/8-11, GRADE 8
3	10712227	FLAT WASHER, 5/8-IN. USS, 18-8 SS
4	10712230	BELLEVILLE WASHER, 5/8-IN.
5	10712370	FLAT WASHER, 5/8-IN., GRADE 8

Figure 6. Excerpt from 40 DGE right side system number 25789600 parts manual, ENP-337.

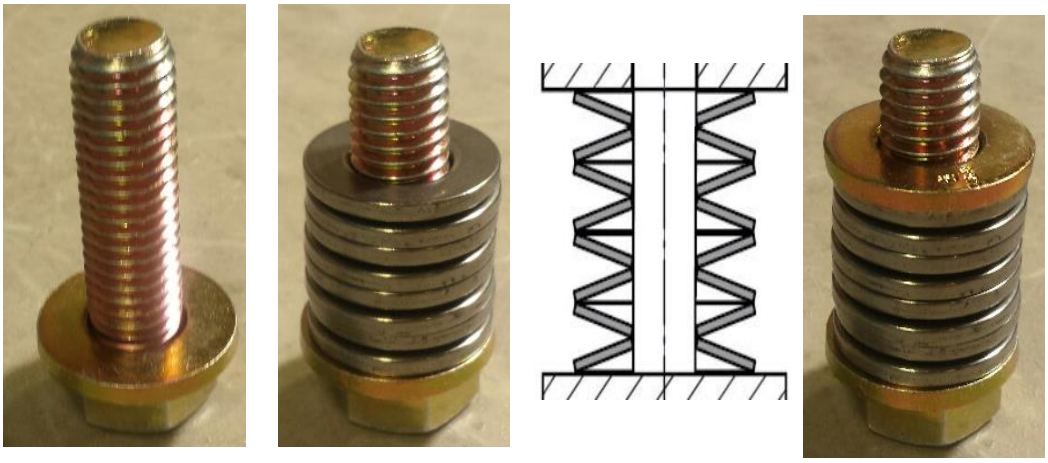

Figure 7. The eight Belleville washers must be stacked by alternating the concave surfaces as shown above. A flat washer is placed at the bottom and top of the stack. Service Tip: Wrap the washer stack with tape to hold the washers in place while installing.

3. Remove the rubber isolators from the straps and the J-bracket.
4. Surface prep is critical for proper adhesion: Prepare the bracket:
    a. Remove all residue and clean the surfaces with isopropyl alcohol (IPA) or acetone.
    b. Abrade if necessary to remove any remaining adhesive.

   c. Wipe down surfaces with a clean cloth and IPA or acetone.
5. Prepare the rubber isolator:
   a. If the surface feels smooth or greasy, roughen the isolator with a wire brush or abrasive pad (sandpaper or sanding cloth) before treating.
   b. Wipe the mating surface with IPA or acetone and allow to completely dry prior to bonding.

6. Mix and apply the adhesive to the entire bracket surface as shown in Figure 8.
7. Press the rubber isolator into place as shown in Figures 8 and 9. Open time for the adhesive is 20 minutes.

NOTE

It may be necessary to trim the 21000149 rubber isolator to 19.5 inches in length when using this procedure with a 267 system.

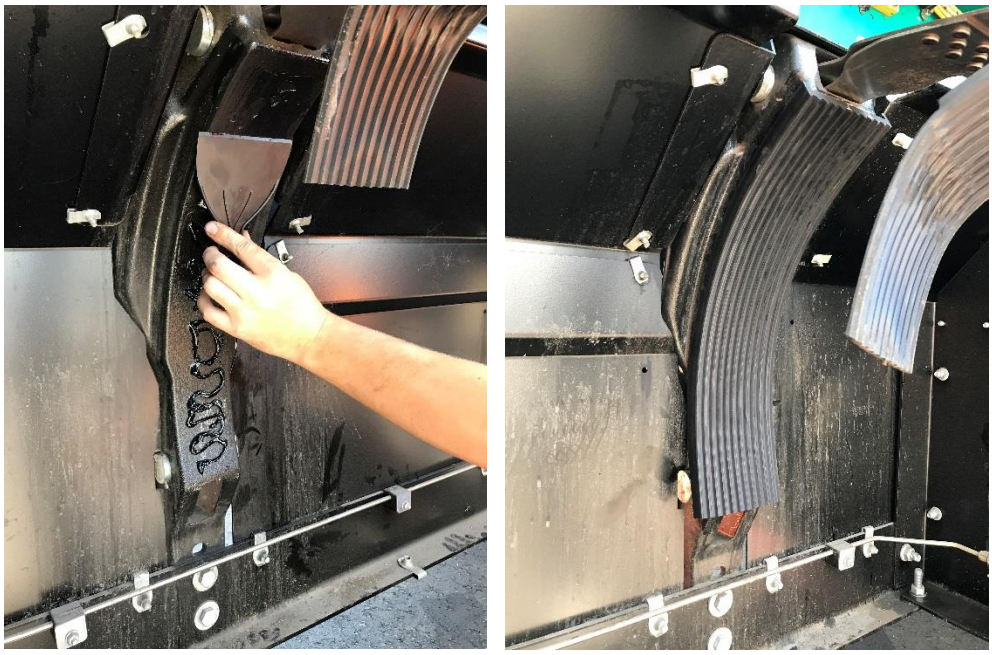

Figure 8. Left: Apply adhesive to the bracket and spread onto the entire surface with a flexible putty knife. Right: Press the new rubber isolator for the J-bracket in place. Note: The bracket shown is mounted on a production fixture. Your exact configuration and access will be slightly different on the vehicle.

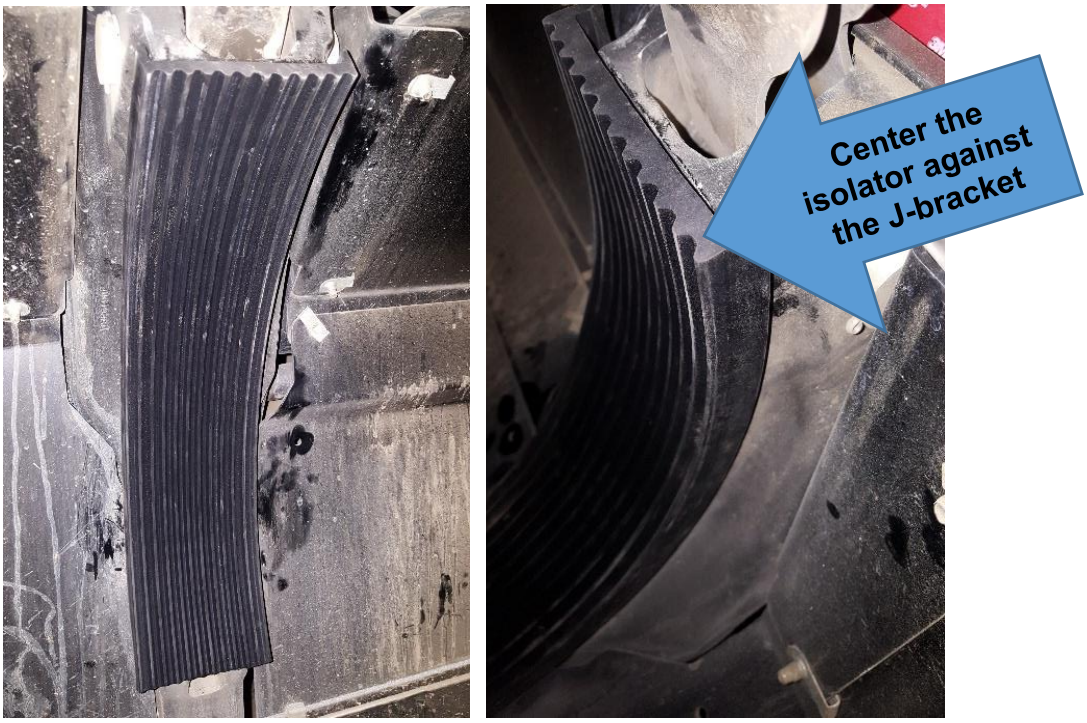

Figure 9. Additional views of the bracket rubber isolators in place.

8. Service Note – Cylinder Mount Torque Specs

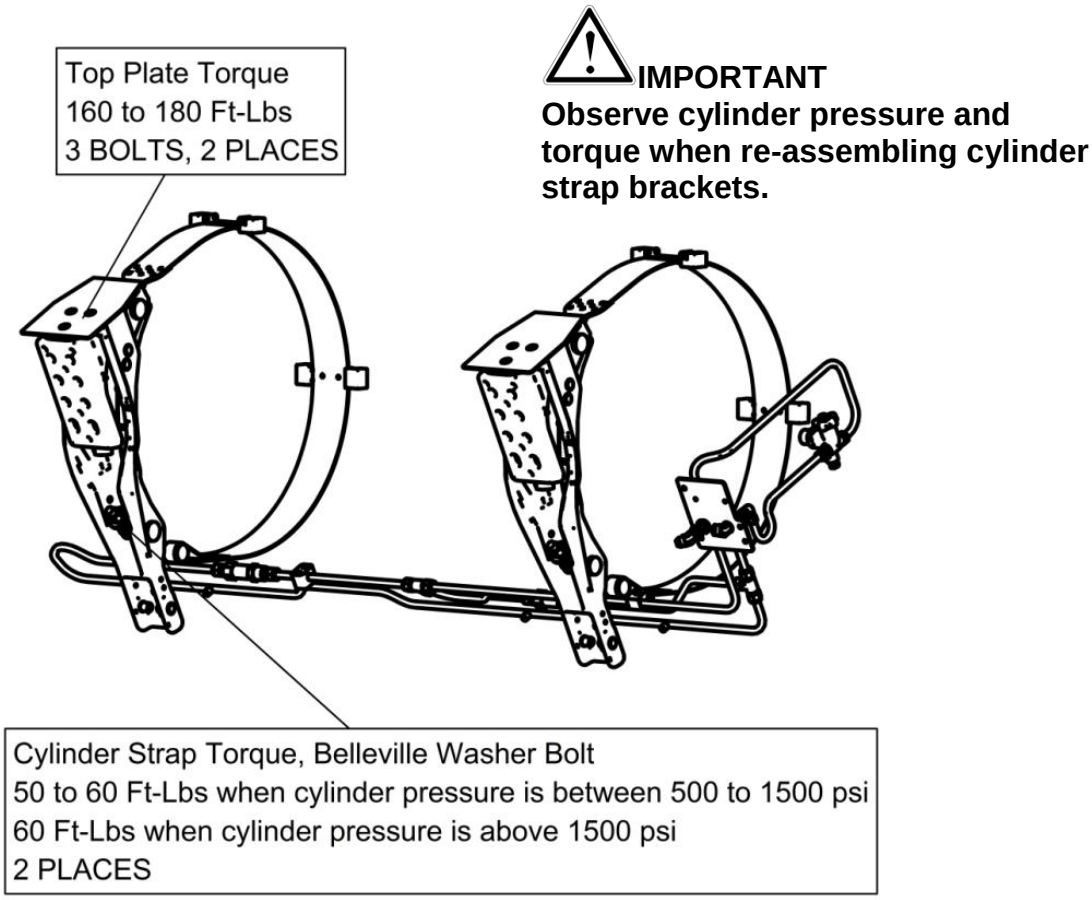

Figure 10. Observe torque specifications and cylinder pressures for strap mounting bolts. Since the cylinder is de-fueled, torque to 50 Ft-Lbs to 60 Ft-Lbs.

9. Re-Fueling/Pressurizing and Testing/Repairing Leaks

WARNING **CAUTION**

When re-fueling the empty cylinder, observe the following precautions and procedures to prevent permanent cylinder damage, personal injury or death.

A. Under normal operating conditions, the cylinder retains a residual pressure of 300 psi to 350 psi (20.7 bar to 24.1 bar), and may be filled normally following all

applicable state, local and fire codes, to a temperature compensated (70°F/21°C) service pressure.

B. If pressure in the cylinder falls below 300 psi (20.7 bar), the cylinder can be filled normally if the ambient temperature is above 0°F/-18°C.

C. If cylinder pressure falls below 300 psi (20.7 bar) and the ambient temperature is below 0°F/-18°C, the cylinder/vehicle must be warmed to 60°F/15.5°C or above, and must be filled within one-half hour.

1. Make sure the bleed valve in the FMM is closed.
2. Open all cylinder valves.
3. Refuel the system, observing the precautions and conditions above.
4. Turn the quarter-turn (main shut-off) valve to the OPEN position, and turn the vehicle ignition key ON. This will allow fuel to flow throughout the system.
5. Pressurize the system and perform a leak test on all components serviced.
6. Fix any leaks.

10. Re-install the Covers and System on the Chassis

1. Re-install the cover assembly parts.
2. The vehicle can be returned to service.

9. Warranty Information

1. This procedure is **not** covered under warranty.
2. Standard repair time (SRT) is 6 hours per system (one side).

If you have any questions, contact Agility Fuel Solutions Customer Care: +1 949 267 7745, toll free: +1 855 500 2445 or support@agilityfs.com.

Proprietary Statement

The information provided within this document is proprietary and confidential. All prior versions, including updates and revisions forwarded separately, are proprietary. The information provided by Agility Fuel Solutions to its customers and clients is solely for the use of those customers and clients. No portion of this manual may be reproduced or distributed without express written consent of Agility Fuel Solutions. Agility Fuel Solutions reserves the right to utilize the intellectual property contained within this publication as content for any other publication produced by Agility Fuel Solutions.

Trademark Notice

Agility® and TUFFSHELL® are registered trademarks of Agility Fuel Solutions. Drop-N-Go™ is a trademark of Agility Fuel Solutions. Trademarks of other manufacturers are the property of their respective companies.

Agility Fuel Solutions

3335 Susan Street Suite 100

Costa Mesa, CA 92626 USA

www.agilityfuelsolutions.com