NOVA BUS

INFORMATION LETTER LI4060ER1

REFERENCE:	Nova Bus Manuals
SECTION:	09: Engine and Cooling
RS Nº:	MQR 7621-805
EFFECTIVE IN PROD.:	N/A

APPLICATION DEADLINE: N/A

SUBJECT:	Electric cooling package (Electric pack)
JUSTIFICATION:	In case of replacing the existing radiator, there is an option to either refit the radiator to the existing frame or replace the complete radiator assembly with frame.

LEVEL	DESCRIPTION	DIRECT CHARGES		TIME
		LABOUR	MATERIAL	
1	Installation of either (A) or (B) : (A) radiator assembly with frame (N90613). (B) radiator (N86731) to existing frame with required modification.	Client	Client	–
2	–	–	–	–

MATERIAL

QTY	PART Nº	REV.	DESCRIPTION	REPLACES PART N°
LEVEL 1				
1	N86731*	–	RADIATOR ELEC & FITTING AS	–
1	N90613*	A	RADIATOR ASSY ELECTRIC	–

Note: *Customer has choice to order either the radiator (N86731) or complete radiator assembly with frame (N90613) depending on need of enhancement.

LEVEL 2				
–	–	–	–	–

DISPOSAL OF PARTS

REMOVED PARTS ARE:	DISCARDED *	RETAINED	* Dispose of the unused parts and the defective parts in accordance with local environmental standards in effect.
	Yes	–	

REVISION HISTORY

REV.	DATE	CHANGE DESCRIPTION	WRITTEN BY
NR	2017JL19	Initial release	Kumaraswamy K S
R1	2017AU16	Added torque values to Figures 11, 12 & 14	Kumaraswamy K S

APPROVED BY: Daniel Theriault

Digitally signed by Daniel Theriault
DN: cn=Daniel Theriault, o=Nova Bus, ou, email=daniel.theriault@volvo.com, c=CA
Date: 2017.08.22 16:11:15 -04'00'

CLIENT	ORDER	ROAD NUMBER		VIN (2NVY/4RKY...)		QTY
		FROM	TO	FROM	TO	
Airdrie Transit - Alberta	L664	—	—	L82U2B3000507	L82U2B3000507	1
Airdrie Transit - Alberta	L759	—	—	L82U0D3000928	L82U0D3000928	1
Ames Transportation Agency - Iowa	L707	660	661	S92U5C4500159	S92U1C4500160	2
Austin - CMTA - Texas	L635	5001	5001	S92U7C4500163	S92U7C4500163	1
Austin - CMTA - Texas	L636	5002	5022	S92U1D4500306	S92U0D4500328	21
BC Transit - BCT - British Columbia	L604	9434	9434	L82U5C3000597	L82U5C3000597	1
BC Transit - BCT - British Columbia	L735	9435	9440	L82U4C3000848	L82U8C3000853	6
BC Transit - BCT - British Columbia	L736	9441	9446	L82U8D3000854	L82U7D3000859	6
Belleville Transit - Ontario	L655	—	—	L82U3B3000385	L82U3B3000385	1
Belleville Transit - Ontario	L702	—	—	L82U4D3000706	L82U4D3000706	1
Bow Valley Transit - Alberta	L712	5	6	L82U6C3000804	L82U8C3000805	2
Brantford - Ontario	L663	10121	10121	L82U1B3000532	L82U1B3000532	1
Brantford - Ontario	L718	10123	10125	L82U5C3000826	L82U9C3000828	3
Calgary Transit - Alberta	L624	—	—	L82U4B4000077	L82U6B4000078	2
Calgary Transit - Alberta	L637	8161	8180	L82U7B3000356	L82U2B3000376	20
Calgary Transit - Alberta	L709	8181	8200	L82UXC3000806	L82U3C3000825	20
Clemson Area Transit - South Carolina	L617	—	—	S92U5C4500002	S92U5C4500002	1
Duke University - North Carolina (ref. L703)	L641	—	—	L82U9C4500012	L82U1C4500022	8
Fredericton - New Brunswick	L672	8111	8112	L82U0B3000540	L82U2B3000541	2
Fredericton - New Brunswick	L688	8113	8113	L82U8C3000643	L82U8C3000643	1
Grand River Transit - GRT - Ontario	L633	21101	21115	L82U7B3000289	L82U8B3000303	15
Grand River Transit - GRT - Ontario	L668	21201	21220	L82U6C3000737	L82UXC3000756	20
Greater Toronto Airports Authority - GTAA - Ontario	L616	—	—	L82U4C4500001	L82U4C4500001	1
Guelph - Ontario	L669	225	228	L82U9B3000536	L82U4B3000539	4
Guelph - Ontario	L715	234	235	L82U3C3000792	L82U5C3000793	2
Halifax - Nova Scotia	L693	526	534	L82U8C3000657	L82U7C3000665	9
Halifax - Nova Scotia	L708	742	761	S92UXC3000782	S92U3C3000803	20
Halifax - Nova Scotia	L710	1160	1161	L82U7C3000780	L82U9C3000781	2
Houston - Texas	L737	1510	1510	S92U4D4500297	S92U4D4500297	1
Houston - Texas	L755	1511	1579	S92U4D4500333	S92U8D4500402	69
Kings Transit - Nova Scotia	L581	—	—	L82U2B3000054	L82U2B3000054	1
Marketing Sales Demo - MSD 6 Houston	L628	—	—	L82U8C4500003	L82UXC4500004	2
Minnesota Valley Transit Authority - MVTA	L706	4252	4258	L82U4C4500127	L82UXC4500133	7
Moncton (Codiac) - New Brunswick	L569	—	—	L82U4B4000001	L82U4B4000001	1
New York City Transit - New York	L621	8075	8089	L82U9B4000124	L82U9B4000138	15
Niagara Falls - Ontario	L652	—	—	S92U3C3000607	S92U6C3000617	11
Niagara Falls - Ontario	L653	—	—	L82U9C3000618	L82U9C3000621	5
Niagara Parks Commission - Ontario	L656	—	—	L82U0C3000653	L82U2C3000654	2
Niagara Parks Commission - Ontario	L685	—	—	S92U9C3000644	S92U8C3000652	9
Red Deer - Alberta	L726	—	—	L82UXC3000840	L82U1C3000841	2
Regina - Saskatchewan	L639	645	654	L82U1B3000336	L82U2B3000345	10
Regina - Saskatchewan	L748	655	662	L82U3D3000874	L82U0D3000881	8

CLIENT	ORDER	ROAD NUMBER		VIN (2NVY/4RKY...)		QTY
		FROM	TO	FROM	TO	
Saskatoon - Saskatchewan	L568	—	—	S92U9B3000013	S92U9B3000013	1
Saskatoon - Saskatchewan	L618	—	—	S92U1C3000377	S92U1C3000377	1
Saskatoon - Saskatchewan	L690	1201	1204	L82U6C3000690	L82U1C3000693	4
Sault Ste-Marie Transit Services - Ontario (ref. L686)	L641	135	139	L82U7C4500008	L82U6C4500016	5
St. John's - Newfoundland	L687	1201	1209	L82U7C3000598	L82U2C3000606	9
St. John's - Newfoundland	L731	1310	1314	L82U3C3000842	L82U2C3000847	5
Stratford - Ontario	L634	—	—	L82UXB3000352	L82UXB3000352	1
Stratford - Ontario	L752	—	—	L82U9D3000863	L82U9D3000863	1
Strathcona County Transit - Alberta	L659	2024	2028	L82U7B3000440	L82U4B3000444	5
Sudbury - Ontario	L632	811	817	L82U9B3000326	L82U4B3000332	7
Sudbury - Ontario	L740	831	833	L82U1D3000887	L82U5D3000889	3
Thunder Bay - Ontario	L662	20168	20168	L82U3B3000533	L82U7B3000535	3
Thunder Bay - Ontario	L739	—	—	L82U3D3000860	L82U7D3000862	3
Timmins - Ontario	L661	—	—	L82U9B3000486	L82U9B3000486	1
Timmins - Ontario	L720	12-98	12-98	L82U0C3000829	L82U0C3000829	1
Toronto Transit Commission - TTC - Ontario	L729	9000	9000	S92U9D3000905	S92U9D3000905	1
Toronto Transit Commission - TTC - Ontario	L738	9001	9026	S92J6D3001094	S92J7D3001119	26
University of Alabama - Alabama	L640	—	—	L82U9B4000141	L82UOB4000142	2
University of Alabama - Alabama	L671	7024	7025	L82U5C4500119	L82U1C4500120	2
University of Alabama - Alabama	L727	7026	7027	L82U4D4500310	L82U6D4500311	2
University of Colorado - Colorado	L627	—	—	S92UXB4000139	S92U6B4000140	2
York Regional Transit - Ontario	L654	1370	1390	S92U1D3000946	S92U2D3000986	21
York Regional Transit - Ontario	L761	1391	1396	S92U6D3001008	S92UXD3001013	6

WARNING

Follow your internal safety procedures.

PROCEDURE

1.1. Park the vehicle on an even surface with transmission in neutral (N).

1.2. Turn the ignition switch to OFF position and engage the parking brake.

1.3. Block the wheels.

1.4. Set the Master control switch in the STOP position (see Figure 1).

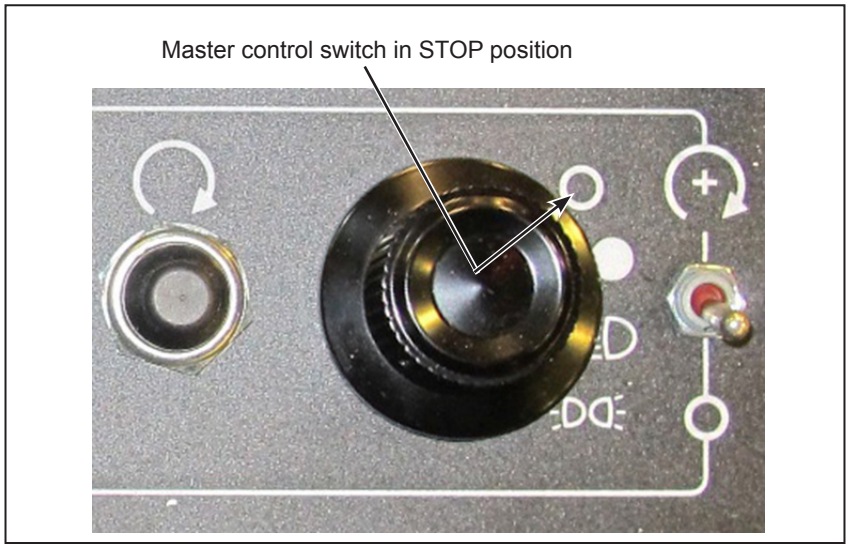

Figure 1 - Master Control Switch in STOP Position

1.5. Set the battery disconnect switch in the battery compartment to the OFF position (see Figure 2).

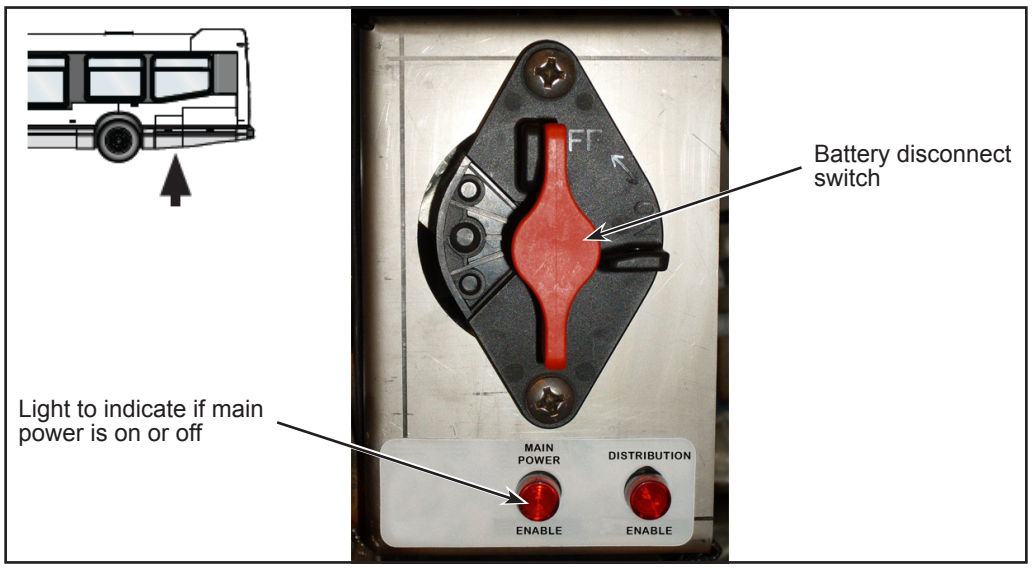

Figure 2 - Typical Battery Disconnect Switch

WARNING

Before starting any work on the radiatior, make sure the vehicle is completely stationary. Isolate the engine starting circuit from the control box located at the rear of the vehicle.

(A) INSTALLATION OF RADIATOR ASSEMBLY WITH FRAME (N90613):

1.6. Drain the coolant. Refer to **section 09: ENGINE AND COOLING of Nova Bus Maintenance Manual for DRAINING OF COOLING SYSTEM.**

CAUTION

Wait until the temperature is below 120° F (50° C) before removing the coolant system pressure cap. Failure to do so can cause personal injury from heated coolant spray.

Some coolants are toxic. Use with caution.

Avoid prolonged and repeated skin contact with used antifreeze which may result in skin disorders or other injury.

WARNING

Handling and disposal of used coolant can be subject to federal and local regulations. Use authorized waste disposal facilities. Contact local authorities for proper guidance on best handling practices.

1.7. Disconnect all the engine's air hoses and coolant hoses connected to the radiator.

1.8. Make sure there are no obstructions for the removal of the radiator assembly.

1.9. Remove the existing radiator assembly.

1.10. Refer to section 09: ENGINE AND COOLING of Nova Bus Maintenance Manual for REMOVAL and INSTALLATION procedure.

1.11. Install the radiator assembly into the vehicle (see Figure 3).

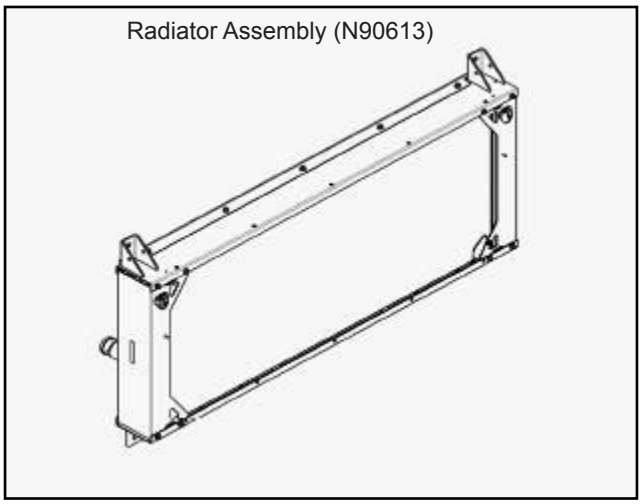

Figure 3 - Typical View of Radiator Assembly

1.12. Connect all the hoses to the radiator that have been previously disconnected.

CAUTION

Before filling ensure that:

The heating system drain valves (floor radiator valves and main drain valve, located at the front of the bus), are CLOSED.

The valves of the defroster return/supply lines (optional) must be OPEN.

The valves located under the heat exchanger of the transmission retarder are CLOSED.

NOTE

See Cummins OWNER'S MANUAL for additional coolant information, approved products and recommendations.

1.13. Fill the cooling system. Refer to **section 09: ENGINE AND COOLING of Nova Bus Maintenance Manual for FILLING OF COOLING SYSTEM.**

1.14. Set the battery disconnect switch in the battery compartment to ON position.

1.15. Set the master control switch in the ON position.

1.16. The vehicle may be returned to service. ❖

(B) INSTALLATION OF RADIATOR (N86731) TO EXISTING FRAME:

1.17. Drain the coolant. Refer to **section 09: ENGINE AND COOLING of Nova Bus Maintenance Manual for DRAINING OF COOLING SYSTEM.**

CAUTION

Wait until the temperature is below 120° F (50° C) before removing the coolant system pressure cap. Failure to do so can cause personal injury from heated coolant spray.

Some coolants are toxic. Use with caution.

Avoid prolonged and repeated skin contact with used antifreeze which may result in skin disorders or other injury.

WARNING

Handling and disposal of used coolant can be subject to federal and local regulations. Use authorized waste disposal facilities. Contact local authorities for proper guidance on best handling practices.

1.18. Disconnect all the engine's air hoses and coolant hoses connected to the radiator.

1.19. Make sure there are no obstructions for the removal of the radiator.

1.20. Disconnect the ground cable (see Figure 4).

Figure 4 - Typical View of Ground Cable Connection

1.21. Remove the plates around the inlet and outlet connections (see Figure 5).

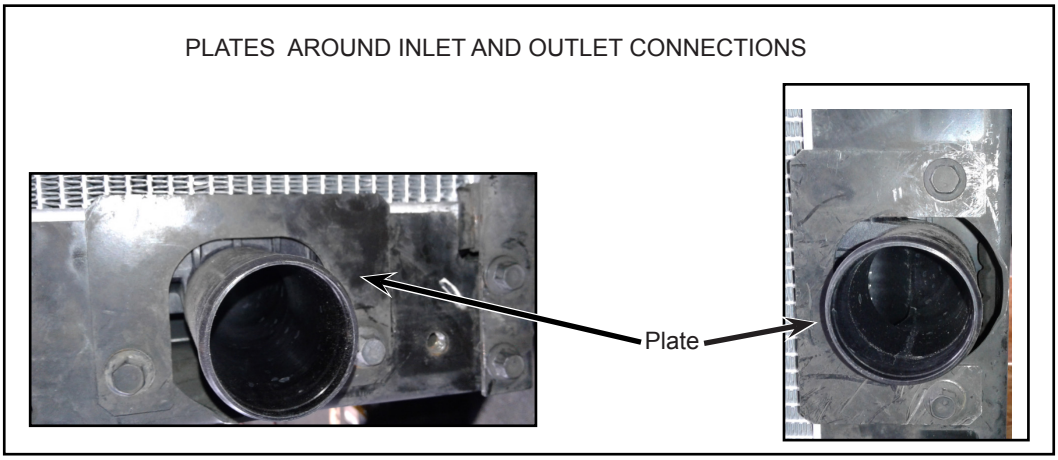

Figure 5 - Typical View of Radiator Frame Disassembly

1.22. Disassemble the side frames of the radiator assembly (see Figure 6).

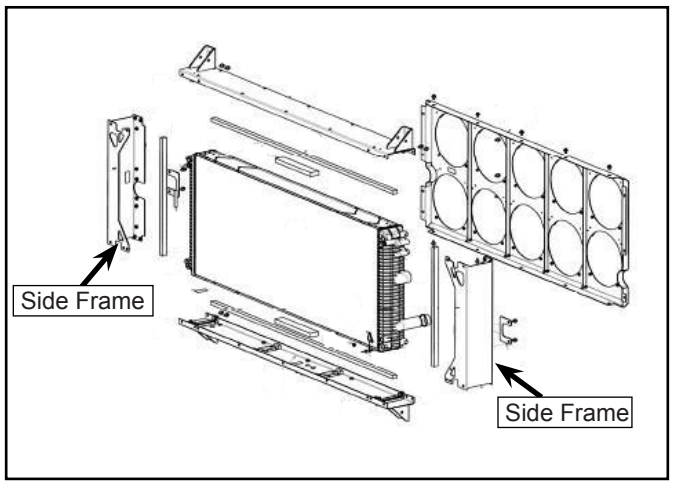

Figure 6 - Typical View of Radiator Frame Disassembly

1.23. Enlarge the opening on the curb side of the radiator assembly frame (see Figure 7).

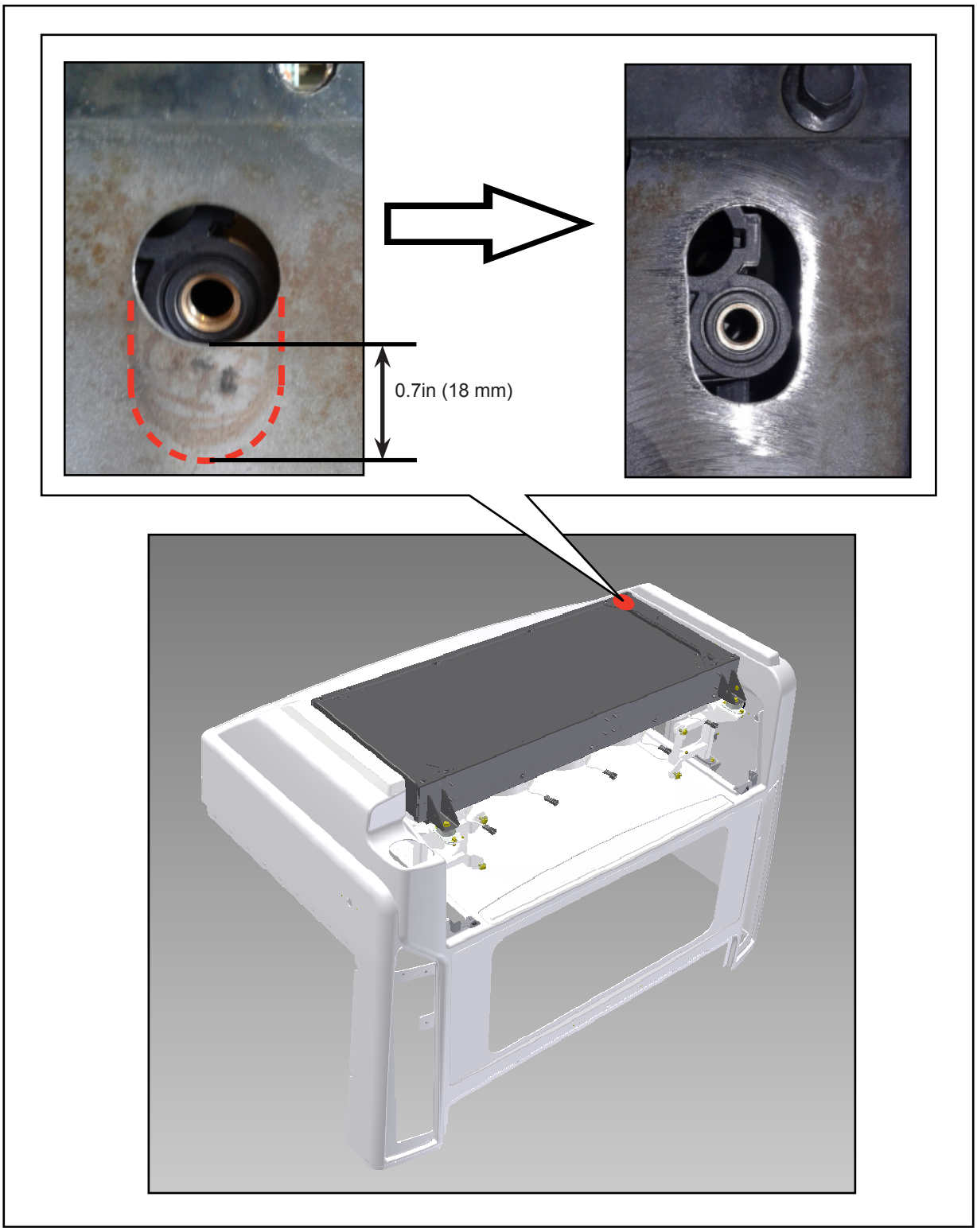

Figure 7 - Typical View of Vent Provision on Curb Side

1.24. Enlarge the opening on the street side of the radiator assembly frame (see Figure 8).

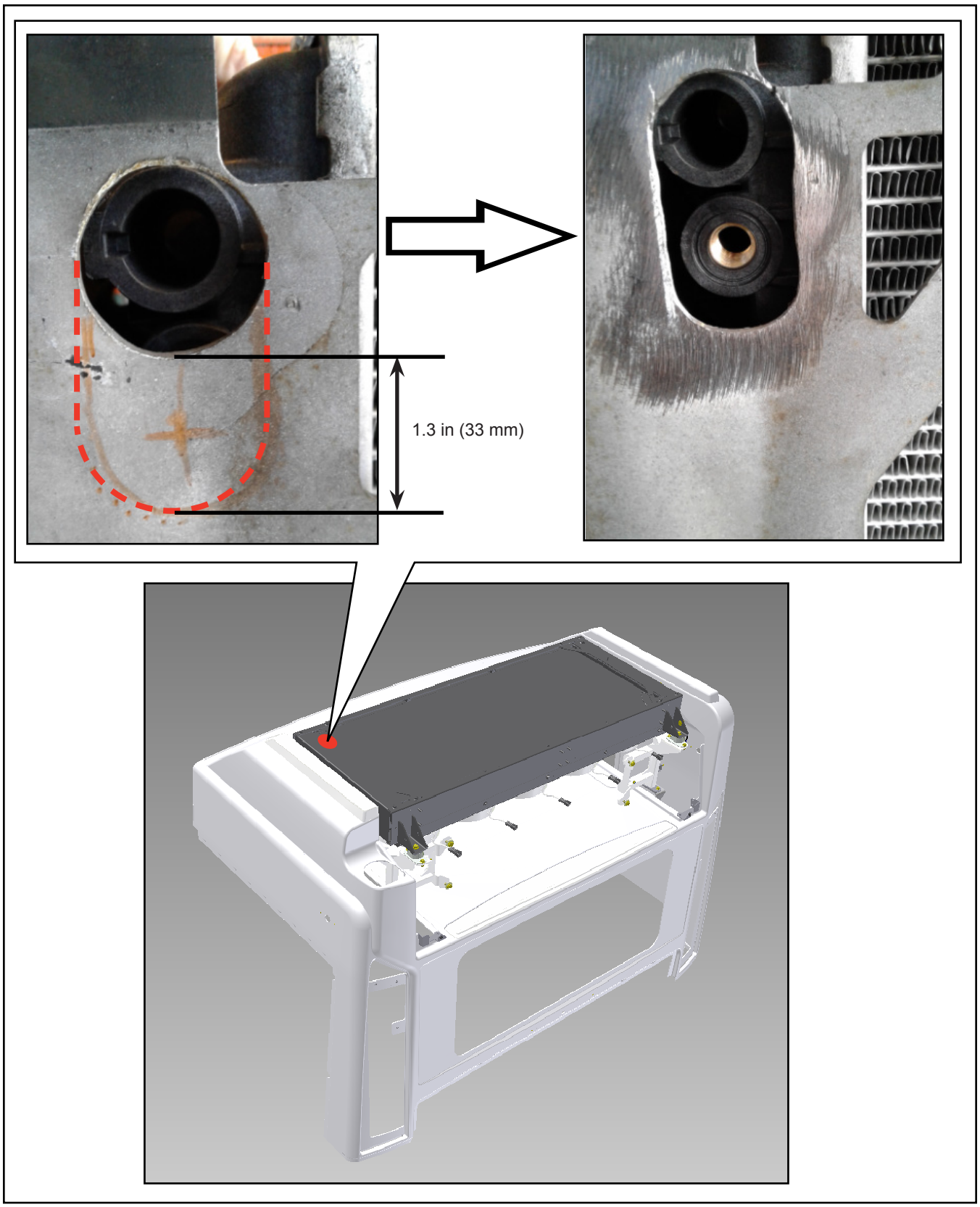

Figure 8 - Typical View of Vent Provision on Street Side

1.25. Apply corrosion resistant coating such as TECTYL3335 (N49247 or any equivalent) to the vent provision cut surfaces.

1.26. Inspect the rubber pads present within the frame that are used to mount the radiator (see Figure 9).

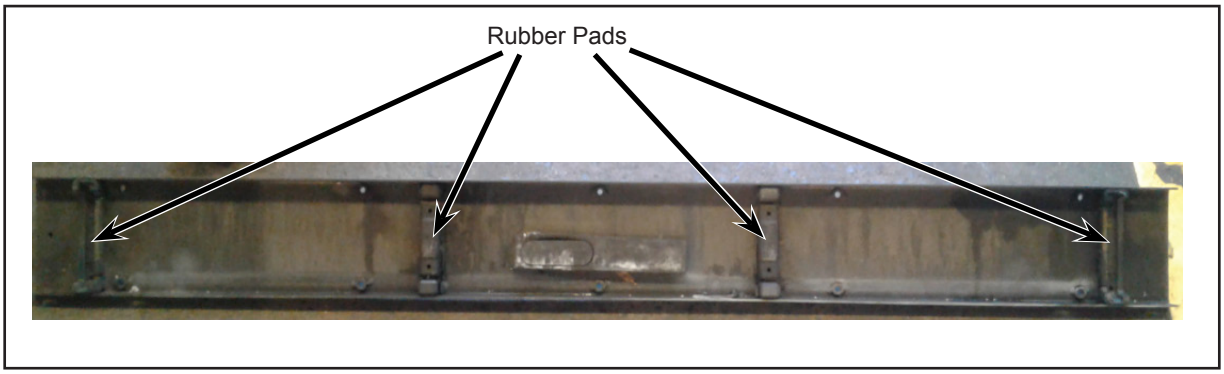

Figure 9 - Typical View of Radiator Frame Rubber Pads

1.27. Check if the rubber pads are free of debris and dirt to prevent any possible contamination. Clean the rubber pads and check for reuse.

NOTE

Rubber pads are reusable as long as not torn, ripped or damaged.

1.28. If pads fall off, take care to reinstall them accordingly. Outer pads must have their slots facing toward inner side (see Figure 10).

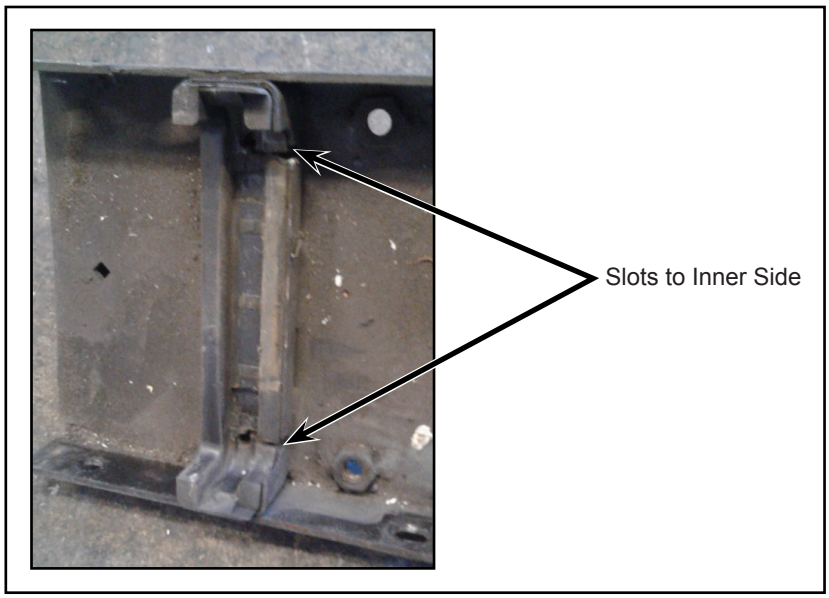

Figure 10 - Typical View of Rubber Pad Installation

NOTE

For easier installation use silicone on pads.

1.29. Insert front and rear frame to grip the radiator (see Figure 11).

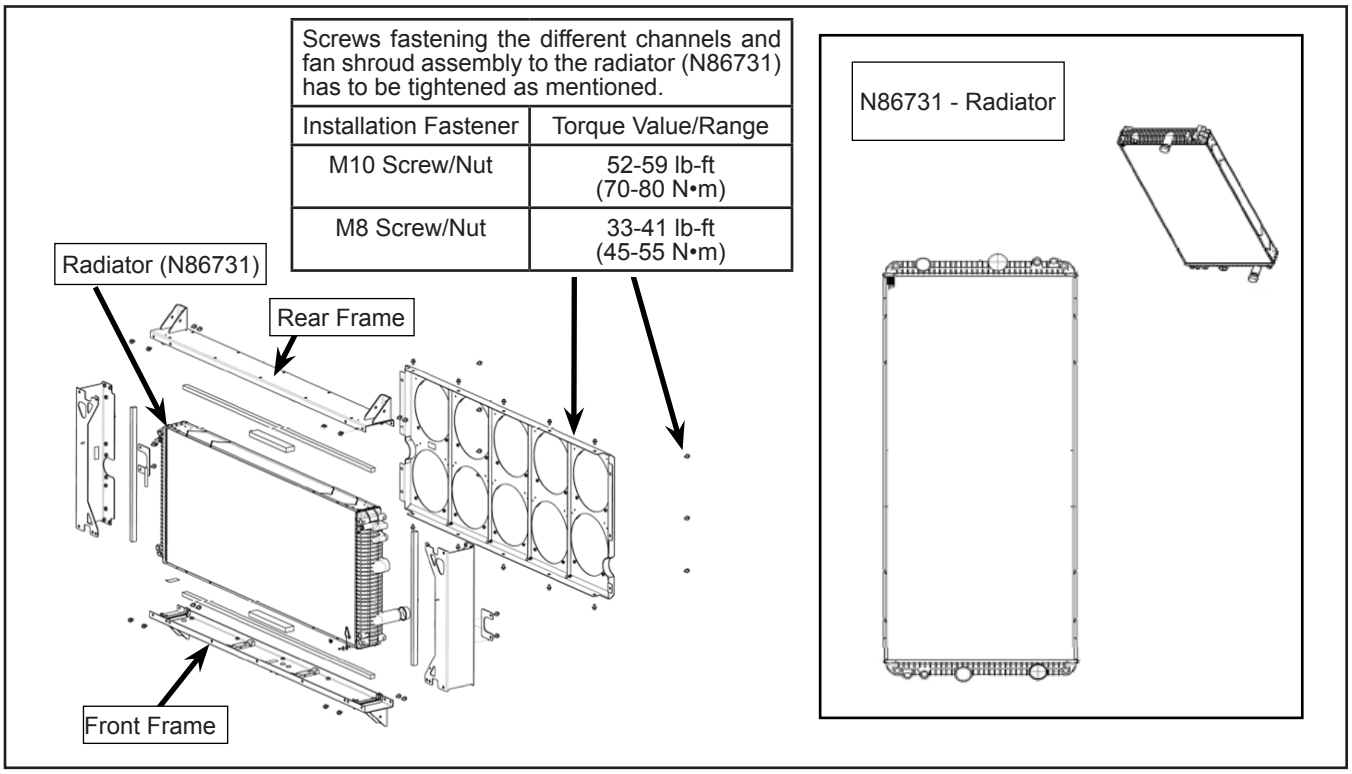

Screws fastening the different channels and fan shroud assembly to the radiator (N86731) has to be tightened as mentioned.	
Installation Fastener	Torque Value/Range
M10 Screw/Nut	52-59 lb-ft (70-80 N•m)
M8 Screw/Nut	33-41 lb-ft (45-55 N•m)

Figure 11 - Typical View of Installation of Radiator into Radiator Assembly Frame

1.30. Use straps to tighten the radiator between the assembly frame.

1.31. Slide the side frames and bolt them to front and rear frames.

1.32. Install the plates around the inlet and the outlet connections (see Figure 12).

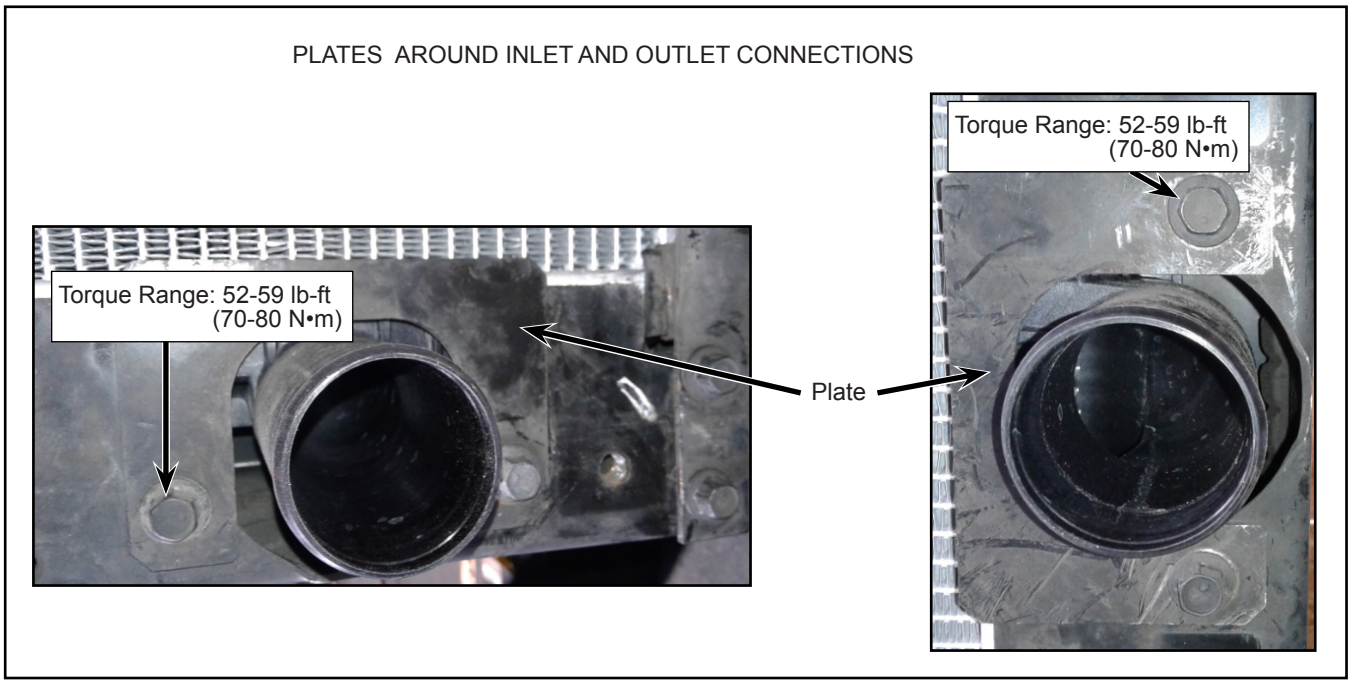

Figure 12 - Typical View of Plate Installation around Inlet and Outlet Connections

1.33. Connect the ground cable that was previously disconnected (see Figure 13).

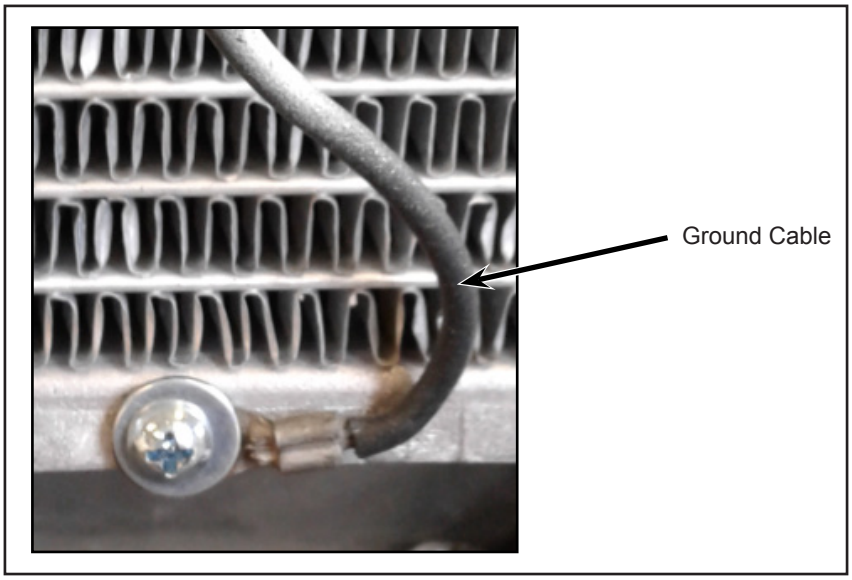

Figure 13 - Typical View of Ground Cable Connection

1.34. Install the second end of the ground cable to the frame (see Figure 14).

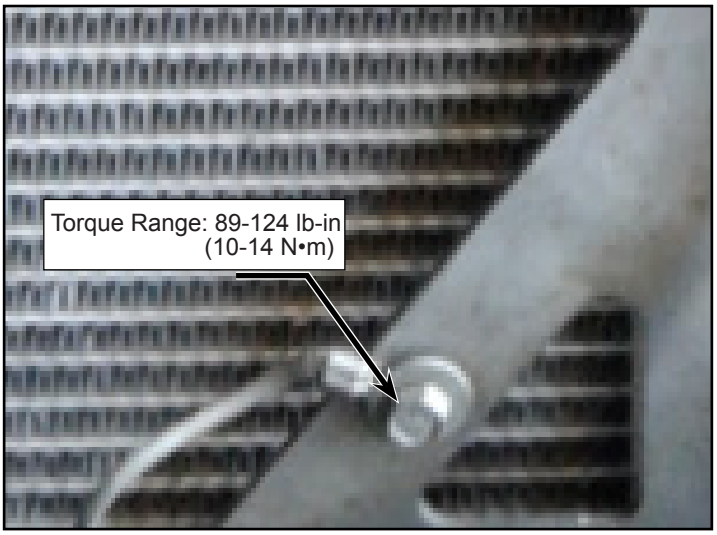

Figure 14 - Typical View of Ground Cable Connection

1.35. Install the two vent fittings to which the coolant hoses are to be fitted. Hand tighten as much as possible into the radiator and torque to 15-18 Nm (see Figure 15).

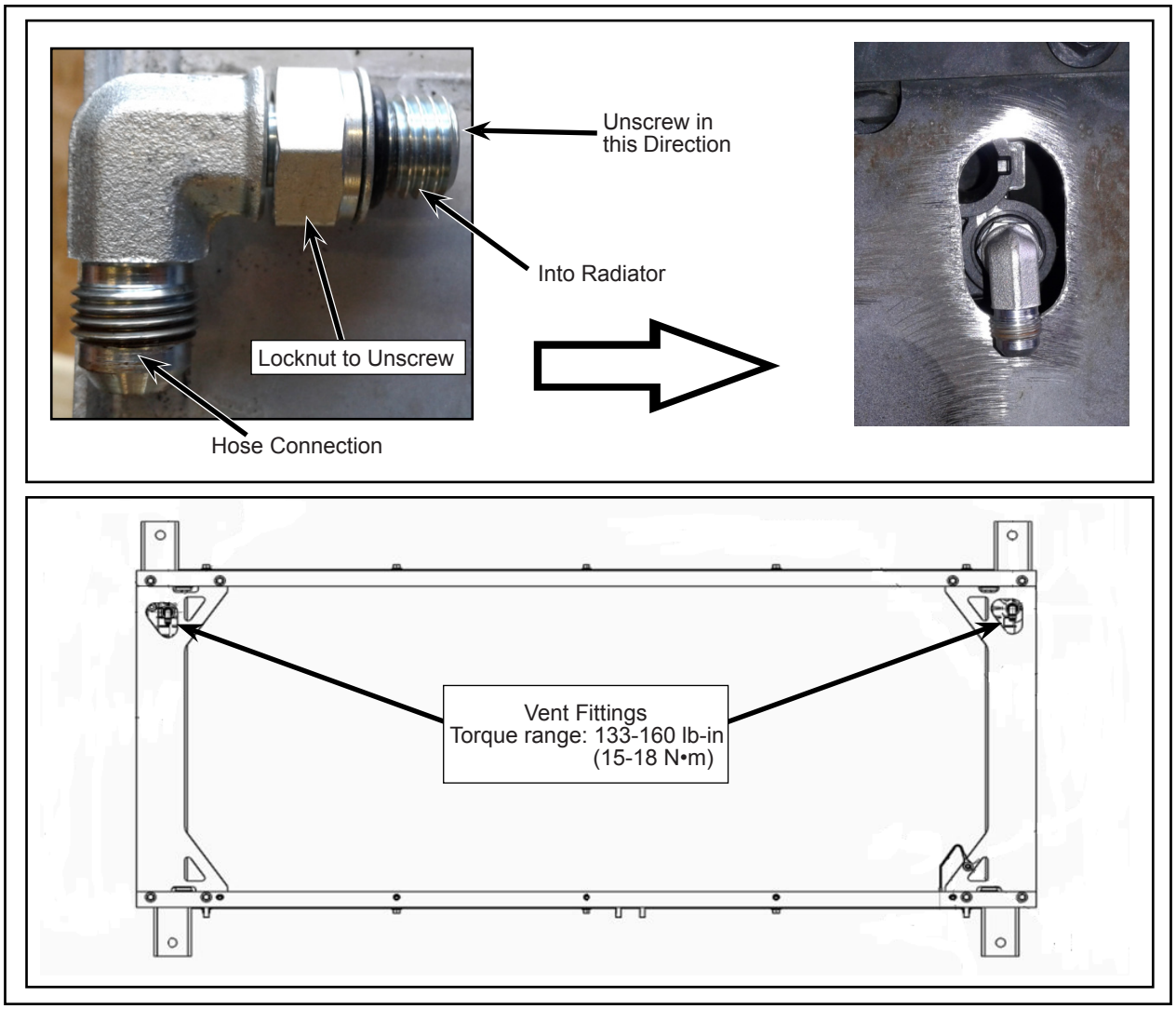

Figure 15 - Typical View of Vent Fittings Installation

NOTE

Refer to section 09: ENGINE AND COOLING of Nova Bus Maintenance Manual for REMOVAL and INSTALLATION procedure.

1.36. Install the radiator assembly into the vehicle (see Figure 16).

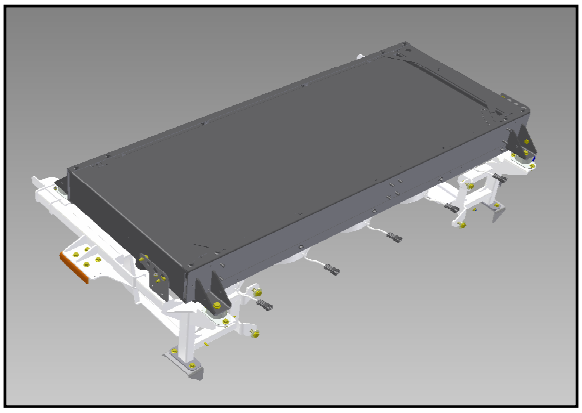

Figure 16 - Typical View of Radiator assembly

1.37. Connect all the hoses to the radiator that have been detached.

1.38. Tie-wrap the hoses side to side to optimize the clearance gap between radiator and grid. Adjust grid height using side fixings adjustment to allow clearance to hoses and fittings.

1.39. Fill the cooling system.Refer to **section 09: ENGINE AND COOLING of Nova Bus Maintenance Manual for FILLING OF COOLING SYSTEM.**

CAUTION

Before filling ensure that:

The heating system drain valves (floor radiator valves and main drain valve, located at the front of the bus), are CLOSED.

The valves of the defroster return/supply lines (optional) must be OPEN.

The valves located under the heat exchanger of the transmission retarder are CLOSED.

NOTE

See Cummins OWNER'S MANUAL for additional coolant information, approved products and recommendations.

1.40. Set the battery disconnect switch in the battery compartment to ON position.

1.41. Set the master control switch in the ON position.

1.42. The vehicle may be returned to service. ❖