Service Data

SD-23-7541

Bendix® ADB22X™, ADB22X-V™ & ADB22X™-LT Air Disc Brakes

SECTION ONE: AIR DISC BRAKE OVERVIEW

1.1 DESCRIPTION

Bendix® ADB22X™, ADB22X-V™ and ADB22X™-LT Air Disc Brakes (ADB) use a floating caliper design to provide foundation braking on all axles of heavy commercial vehicles, buses and trailers. Bendix air disc brakes provide safety and performance as well as ease of service.

The ADB22X disc brakes mount to the axle's anchor plate (torque plate) using fasteners that are installed parallel to the axle, while the anchor-plate fasteners used for the Bendix ADB22X-V air disc brakes install at right angles to the axle. The ADB22X-LT air disc brake is designed for trailer applications.

Available with or without a combination spring brake unit, these brakes may also include optional wear sensors and wear diagnostic equipment.

Figure 1 – Bendix® ADB22X™ Air Disc Brakes

Section One

Section		Page
1.1	Description	1
1.2	Air Disc Brake Identification	1
1.3	Rotor Identification	4
1.4	Wear Sensor Identification	4
1.5	Operation	4
1.5.1	Brake Release and Adjustment	4

1.2 Air Disc Brake Identification

Locate the identification label near the guide pin housing. *See below for information about the label fields used.*

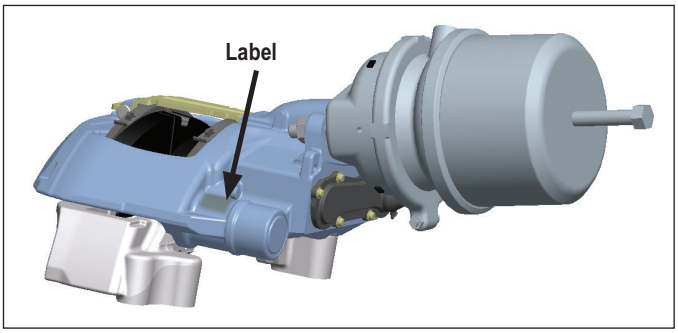

Figure 2 – Typical Part Number Label Location

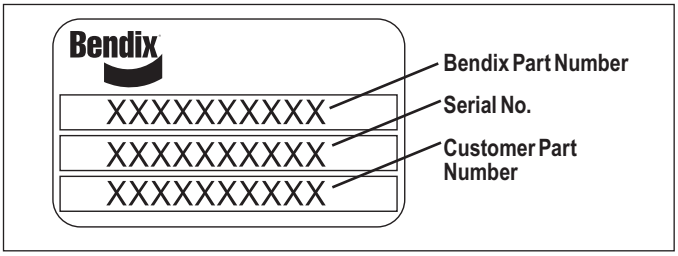

Figure 3 – Part Number Label Information

GENERAL SAFETY GUIDELINES

WARNING! PLEASE READ AND FOLLOW THESE INSTRUCTIONS TO AVOID PERSONAL INJURY OR DEATH:

When working on or around a vehicle, the following guidelines should be observed AT ALL TIMES:

- ▲Park the vehicle on a level surface, apply the parking brakes and always block the wheels. Always wear personal protection equipment.
- ▲Stop the engine and remove the ignition key when working under or around the vehicle. When working in the engine compartment, the engine should be shut off and the ignition key should be removed. Where circumstances require that the engine be in operation, EXTREME CAUTION should be used to prevent personal injury resulting from contact with moving, rotating, leaking, heated or electrically-charged components.
- ▲Do not attempt to install, remove, disassemble or assemble a component until you have read, and thoroughly understand, the recommended procedures. Use only the proper tools and observe all precautions pertaining to use of those tools.
- ▲If the work is being performed on the vehicle's air brake system, or any auxiliary pressurized air systems, make certain to drain the air pressure from all reservoirs before beginning ANY work on the vehicle. If the vehicle is equipped with a Bendix® AD-IS® air dryer system, a Bendix® DRM™ dryer reservoir module, or a Bendix® AD-9si® air dryer, be sure to drain the purge reservoir.
- ▲Following the vehicle manufacturer's recommended procedures, deactivate the electrical system in a manner that safely removes all electrical power from the vehicle.
- ▲Never exceed manufacturer's recommended pressures.
- ▲Never connect or disconnect a hose or line containing pressure; it may whip and/or cause hazardous airborne dust and dirt particles. Wear eye protection. Slowly open connections with care, and verify that no pressure is present. Never remove a component or plug unless you are certain all system pressure has been depleted.
- ▲Use only genuine Bendix® brand replacement parts, components and kits. Replacement hardware, tubing, hose, fittings, wiring, etc. must be of equivalent size, type and strength as original equipment and be designed specifically for such applications and systems.
- ▲Components with stripped threads or damaged parts should be replaced rather than repaired. Do not attempt repairs requiring machining or welding unless specifically stated and approved by the vehicle and component manufacturer.
- ▲Prior to returning the vehicle to service, make certain all components and systems are restored to their proper operating condition.
- ▲For vehicles with Automatic Traction Control (ATC), the ATC function must be disabled (ATC indicator lamp should be ON) prior to performing any vehicle maintenance where one or more wheels on a drive axle are lifted off the ground and moving.
- ▲The power MUST be temporarily disconnected from the radar sensor whenever any tests USING A DYNAMOMETER are conducted on a vehicle equipped with a Bendix® Wingman® system.
- ▲You should consult the vehicle manufacturer's operating and service manuals, and any related literature, in conjunction with the Guidelines above.

⚠ WARNING: Not all wheels and valve stems are compatible with Bendix Air Disc Brakes. Use only wheels and valve stems approved by the vehicle manufacturer to avoid the risk of valve stem shear and other compatibility issues.

⚠ WARNING: AVOID CREATING DUST. POSSIBLE CANCER AND LUNG DISEASE HAZARD.

While Bendix Spicer Foundation Brake LLC does not offer asbestos brake linings, the long-term affects of some non-asbestos fibers have not been determined. Current OSHA Regulations cover exposure levels to some components of non-asbestos linings, but not all. The following precautions must be used when handling these materials.

- **Avoid creating dust. Compressed air or dry brushing must never be used for cleaning brake assemblies or the work area.**
- **Bendix recommends that workers doing brake work must take steps to minimize exposure to airborne brake lining particles. Proper procedures to reduce exposure include working in a well-ventilated area, segregation of areas where brake work is done, use of local filtered ventilation systems or use of enclosed cells with filtered vacuums. Respirators approved by the Mine Safety and Health Administration (MSHA) or National Institute for Occupational Safety and Health (NIOSH) should be worn at all times during brake servicing.**
- **Workers must wash before eating, drinking or smoking; shower after working, and should not wear work clothes home. Work clothes should be vacuumed and laundered separately without shaking.**
- **OSHA Regulations regarding testing, disposal of waste and methods of reducing exposure for asbestos are set forth in 29 Code of Federal Regulations §1910.001. These Regulations provide valuable information which can be utilized to reduce exposure to airborne particles.**
- **Material Safety Data Sheets on this product, as required by OSHA, are available from Bendix. Call 1-800-247-2725 and speak to the Tech Team or e-mail techteam@bendix.com**

WARNING: If pads or rotors show signs of premature wear or failure, verify the brake chamber is sized appropriately for the application. An over-sized brake chamber can result in excessive force being applied to the brake pads and rotors. Additionally, under-sized brake chambers can result in too little braking force being applied to the brake and could increase the time and distance needed to stop the vehicle. ***See the table below for brake chamber guideline.***

		Knorr or Bendix® Air Disc Brake		
		SN-7™	ADB22X™	ADB22X™-LT
Max. permissible Bendix® cylinder size	Service brake system	T30	T24	T18
	Parking brake system	T30/24 HFL3	T24/24 HFL1	T18/24 DDSB

SERVICE DATA INDEX

Section One: Air Disc Brake Overview 1
Safe Maintenance Practices 2
1.1 Description 1
1.2 Air Disc Brake Identification 1
1.3 Rotor Identification 4
1.4 Wear Sensor Identification 4
1.5 Operation 4
1.5.1 Brake Release and Adjustment 4

Section Two: Preventive Maintenance Schedule and Wheel-On Inspections . 7
2.0 Preventive Maintenance 7
2.1 Brake Pad and Rotor Inspections 8
2.2 Running Clearance Quick Inspection 9

Section Three: Troubleshooting Procedure Flowchart 10

Section Four: Wheel-Off Maintenance Inspections 12
4.0 Wheel-Off Inspections 12
4.1 Caliper Movement Test 12
4.2 Adjuster Mechanism Inspection 13
4.3 Inspect The Brake Pads 15
4.4 Inspect The Rotor 16
4.5 Guide Pin Bearing Inspection 17
4.6 Tappet And Boot Assembly Inspection 18

Section Five: Maintenance Kits And Procedures 19
5.0 Maintenance Kits 20
5.0.1 General Information About Bendix Air Disc Brake Maintenance 21
5.1 Air Disc Brake Shield Kit 22
5.2 Pad Replacement 23
5.3 Caliper/Carrier/Actuator Assembly 25
5.4 Spring or Service Brake 28
5.5 Tappet & Boot Assemblies, and Tappet Inner Seal Replacement 29
5.6 Guide Pin and Boot Assemblies 33
5.7 Bendix® Splined Disc® Hub Rotor 39

Contacting Bendix 41

1.3 Rotor Identification

See Figure 4 to help you identify which type of rotor is used on the axle being inspected. Note that the maintenance inspection procedure will depend on the type of rotor installed.

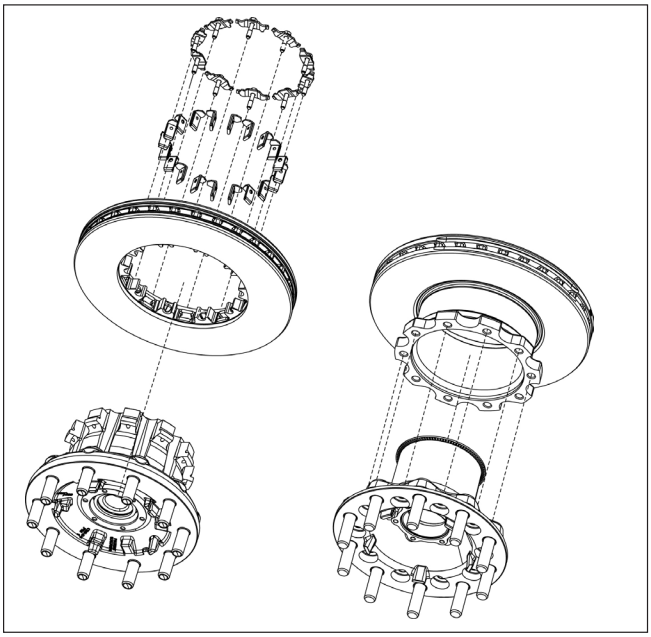

Figure 4 – Rotor Identification

CAUTION: Rotors may not be mixed on a single axle: axles are only permitted to have <u>all</u> conventional or <u>all</u> Bendix® Splined Disc® brake rotors.

1.4 Wear Sensor Identification

See Figure 5 for the electronic wear sensor that may be present.

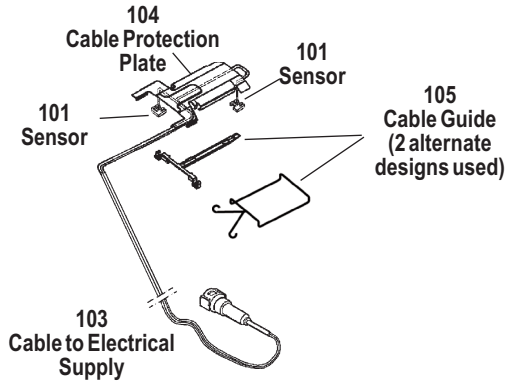

Sensor 101
Cable to Electrical Supply. . . .103
Cable Protection Plate 104
Cable Guide (two designs) . . .105

Consult the instruction sheet included with wear indicator kits for installation information.

Figure 5 – Electronic Wear Indicator Components

1.5 Operation

Bendix air disc brakes convert air pressure into braking force. *(See Figure 6.)* When the vehicle brakes are applied, air enters the service brake chamber through the supply port, applying pressure within the diaphragm. The pressure expands the diaphragm – applying force to, and moving, the pressure plate and pushrod forward. The pushrod acts against a cup in the internal lever – which pivots on an eccentric bearing – moving the bridge. Moving against a return spring, the bridge transfers the motion to two threaded tubes and tappets, which move the inner brake pad. The inner brake pad (from its normal position of having a running clearance between it and the rotor) moves into contact with the brake rotor. Further movement of the bridge forces the caliper – sliding on two stationary guide pins – away from the rotor. That, in turn, pulls the outer brake pad into the rotor. The clamping action of the brake pads on the rotor applies braking force to the wheel.

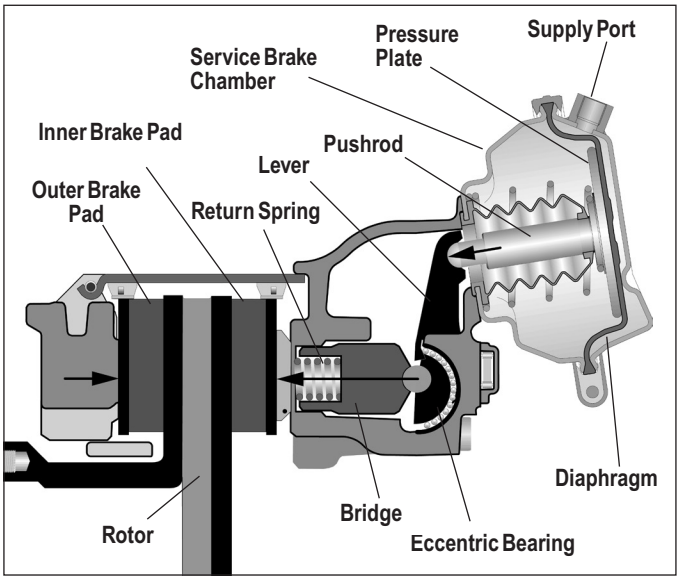

Figure 6 – Sectional View Showing Brake Operation

1.5.1 Brake Release and Adjustment

When the vehicle brakes are released, the air pressure in the service brake chamber is exhausted and the return springs in the chamber and the bridge return the air disc brake to a neutral, non-braked position. To maintain the running clearance gap between the rotor and the brake pads over time, the non-braked position is mechanically adjusted by a mechanism in the caliper. The adjustment mechanism operates automatically whenever the brakes are activated, to compensate for rotor and brake pad wear and to keep the running clearance constant. During pad or rotor maintenance, the technician manually sets the system's initial non-braked position. The total running clearance (the sum of clearances on both sides of the rotor) should be between 0.024 to 0.043 in. (0.6 to 1.1 mm).

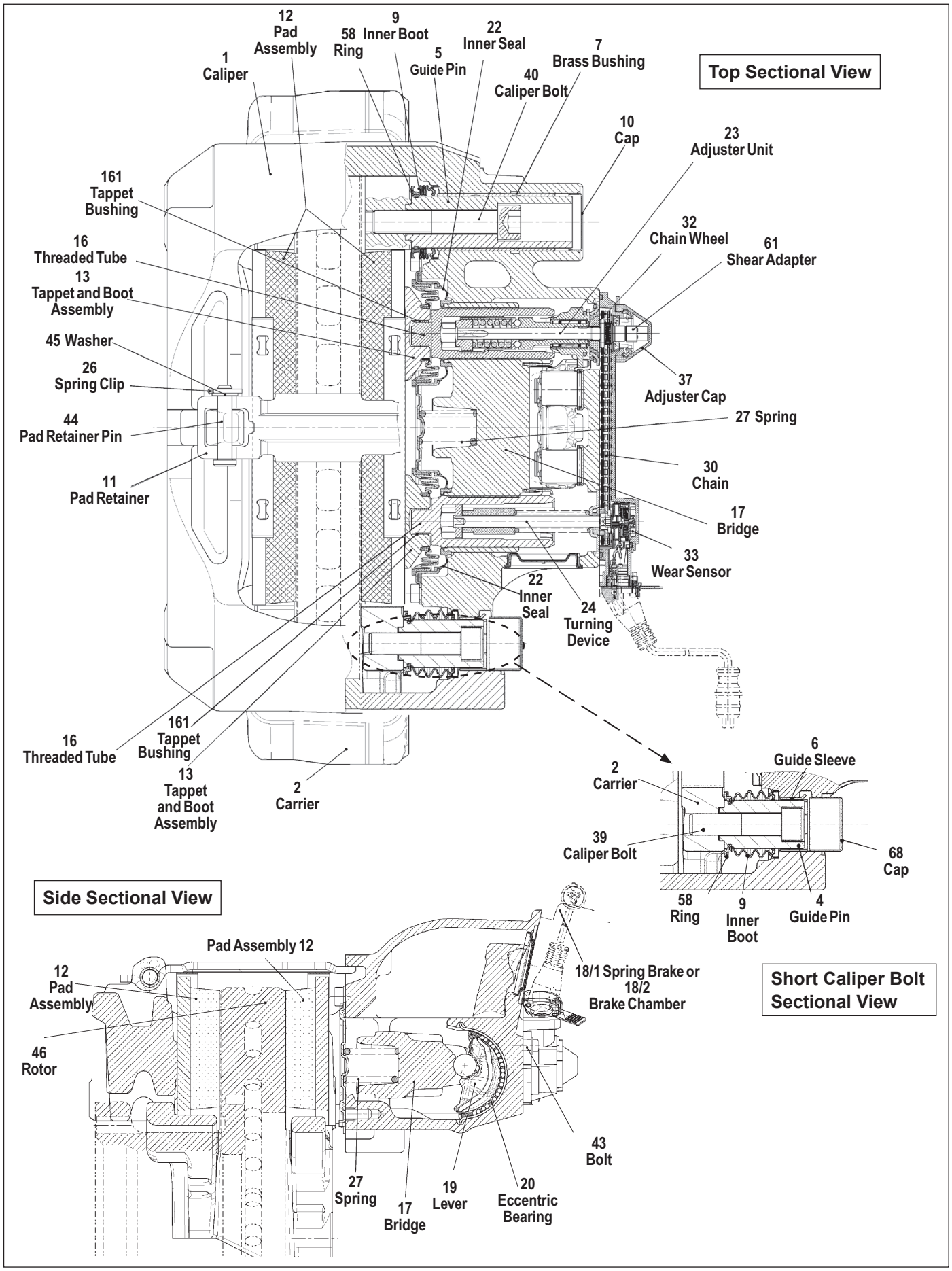

Figure 7 – Sectional Views

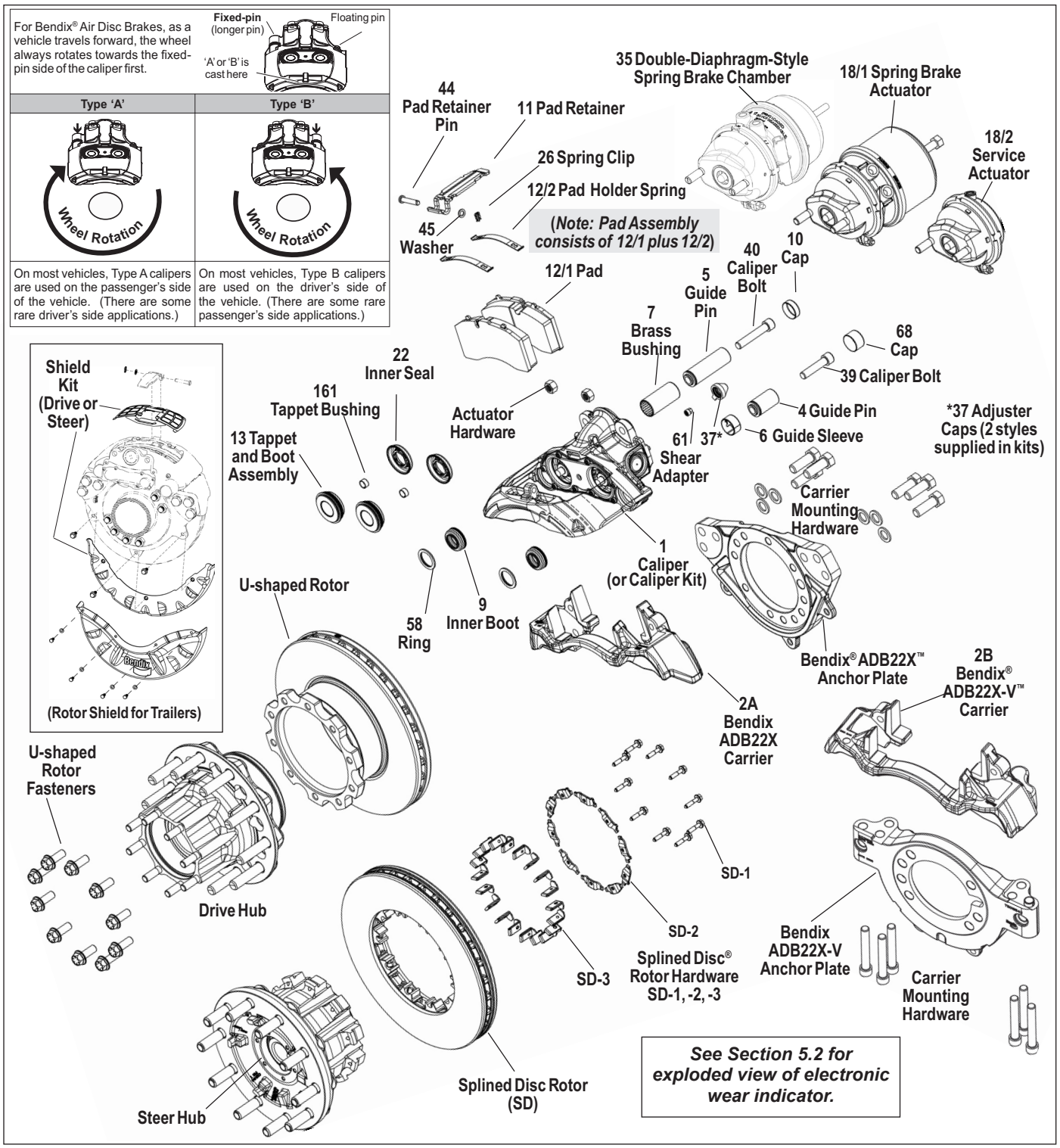

Figure 8 – Exploded View - Bendix® ADB22X™, ADB22X-V™ and ADB22X™-LT Air Disc Brakes

INDEX TO FIGURES 7 & 8

Adjuster Caps 37
Adjuster Unit 23
Bolt 43
Brass Bushing 7
Bridge 17
Caliper 1
Caliper Bolt 39, 40
Cap 68
Carrier. . . . . 2 (A or B)
Chain 30
Chain Wheel 32
Cap 10
Eccentric Bearing 20
Guide Pins 4, 5
Guide Sleeve 6
Inner Boot 9
Inner Seal 22
Lever. 19
Pad 12/1
Pad Holder Spring 12/2
Pad Assembly. 12
Pad Retainer. 11
Pad Retainer Pin 44
Ring 58
Service Actuator 18/2
Shear Adapter. 61
Splined Disc Hardware . . . . . .SD-1, SD-2 and SD-3
Spring 27
Spring Brake Actuator. . 18/1
Spring Brake Actuator (Double-Diaphragm style) 35
Spring Clip 26
Tappet and Boot Assembly 13
Tappet Bushing. 161
Threaded Tube 16
Turning Device 24
Washer 45
Wear Sensor. 33

2.0 PREVENTIVE MAINTENANCE

Regular inspection and maintenance of air disc brake components is an important part of vehicle maintenance.

The maintenance practices outlined here are recommended in addition to all standard industry practices (including daily pre-trip inspections.) Also, see the vehicle's manual for recommendations. Keep track of the results of your maintenance inspections to assist you in determining the ideal maintenance intervals for the vehicle.

Use the table below for a guide to maintenance interval planning, however, depending on the particular vehicle's use, more frequent checks of the components may be necessary.

Section Two

Section		Page
2.0	Preventive Maintenance	7
2.1	Brake Pad and Rotor Inspections	8–9
2.2	Running Clearance Quick Inspection	9

*** For vehicles with electronic wear indicators**, use the dash indicator(s) and/or the hand-held diagnostic tool to regularly monitor the pad wear.

See Section 5.2.

Table 1: Inspection Period

	When you check the tire pressures	(4 to 5 times during the pad lifetime)		At the very least, every four (4) months	At least once every year (and at every pad replace-ment)
		About every four (4) months for over-the-road applications:	About every three (3) months for higher-duty applications:		
		e.g. line haul, RV, open-highway coaches, etc.	e.g. pick-up & delivery, off-highway, construction, logger, concrete mixer, dump truck, city transit bus, refuse, school buses, etc. 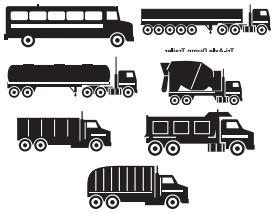		
Inspections with the wheel mounted (Sections 2.1 - 2.3)					
Inspect the pad thickness by checking the mechanical wear indicators*. *See Section 2.1.*	✔	✔	✔	✔	
Inspect the running clearances using the quick inspection technique. *See Section 2.2.*	✔	✔	✔	✔	
Inspect the visible part of the rotors for cracks, etc. *See Section 2.3.*	✔	✔	✔	✔	
Inspections with wheel removed (Section 4)					
Inspect the pads and entire rotor surfaces for cracks, etc. (Bendix® Splined Disc® rotors: Inspect retaining hardware and check torques) *See Section 2.3.*					✔
Inspect the running clearances and adjuster operation. *See Sections 2.2 and 4.2.*					✔
Inspect the caliper travel. *See Section 4.1.*					✔
Inspect the tappet and boot assemblies. *See Section 4.6.*					✔
Inspect all caps, hoses, and brake exterior for damage etc.					✔

Table 1 – Preventive Maintenance Schedule

2.1 BRAKE PAD AND ROTOR INSPECTIONS

Visual checks of the condition of the brake pad/rotor wear can be made without removing the wheels. Where dust guards are not used, the top of the pads and part of the rotor are visible through the opening at the top of the brake. Other visible portions of the rotor can be inspected at the same time.

Unless a vehicle has been stored for some time, the main rotor surfaces that contact the pads will always appear to be shiny. Surface rust on these surfaces would indicate a malfunctioning brake that should be inspected immediately.

Pads are 1.181 in. (30 mm.) thick when new and must be replaced when they reach 0.433 in. (11 mm.). Rotors are 1.77 in. (45 mm.) thick when new and must be replaced when they reach 1.46 in. (37 mm.). *See Section 4.3 for further inspection criteria.*

2.1.1 Electronic Wear Indicators

Use the dash indicator(s) and/or a hand-held diagnostic tool to regularly monitor the pad wear. *(See Section 5.2.)*

2.1.2 Mechanical Wear Indicators

See Figure 9 for the location of the mechanical wear indicators. There are two types *(See Figure 10 for Style A and Figure 11 for Style B)*.

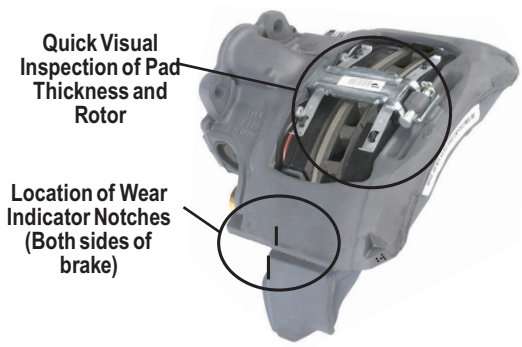

Figure 9 – Location of Wear Indicators

Note: These mechanical wear indicators do not constitute "out-of-service" criteria. These inspections only show when to schedule a full wheel-removed inspection of the brake pads and rotor. The thicknesses of the pad and rotor will both affect the wear indicator position at which maintenance is actually needed.

Wear Indicator Style A:

Where both the carrier and caliper have an indicator notch.

Compare the relative position of two notches cast into the carrier and caliper. When the two notches align, it is time to schedule a full, wheel-removed inspection of the pads and rotor.

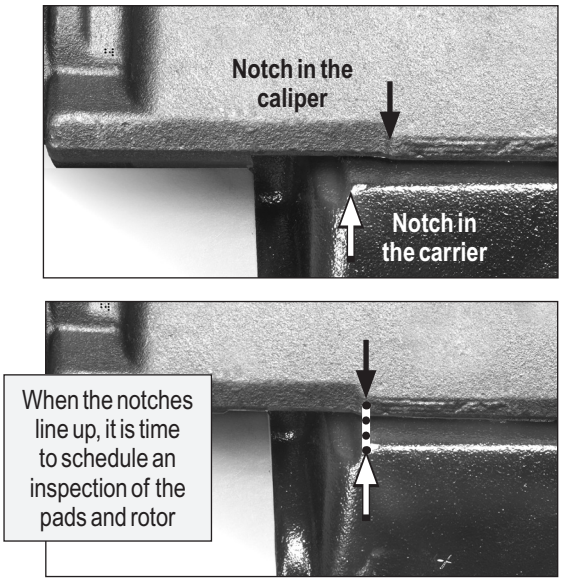

Figure 10 – Style A - Both Carrier and Caliper have a Cast Notch

Wear Indicator Style B:

Where only the caliper has an indicator notch.

When the notch in the caliper aligns with the front edge of the torque plate, it is time to schedule a full wheel-removed inspection of the pads and rotor.

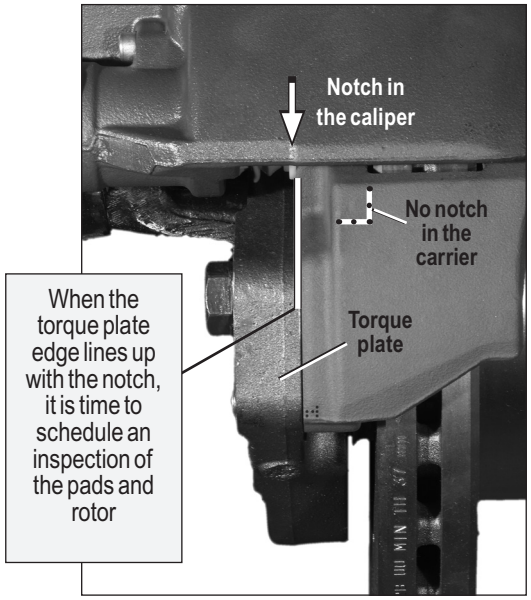

Figure 11 – Carrier Wear Indicator Notch and Backing Plate Alignment

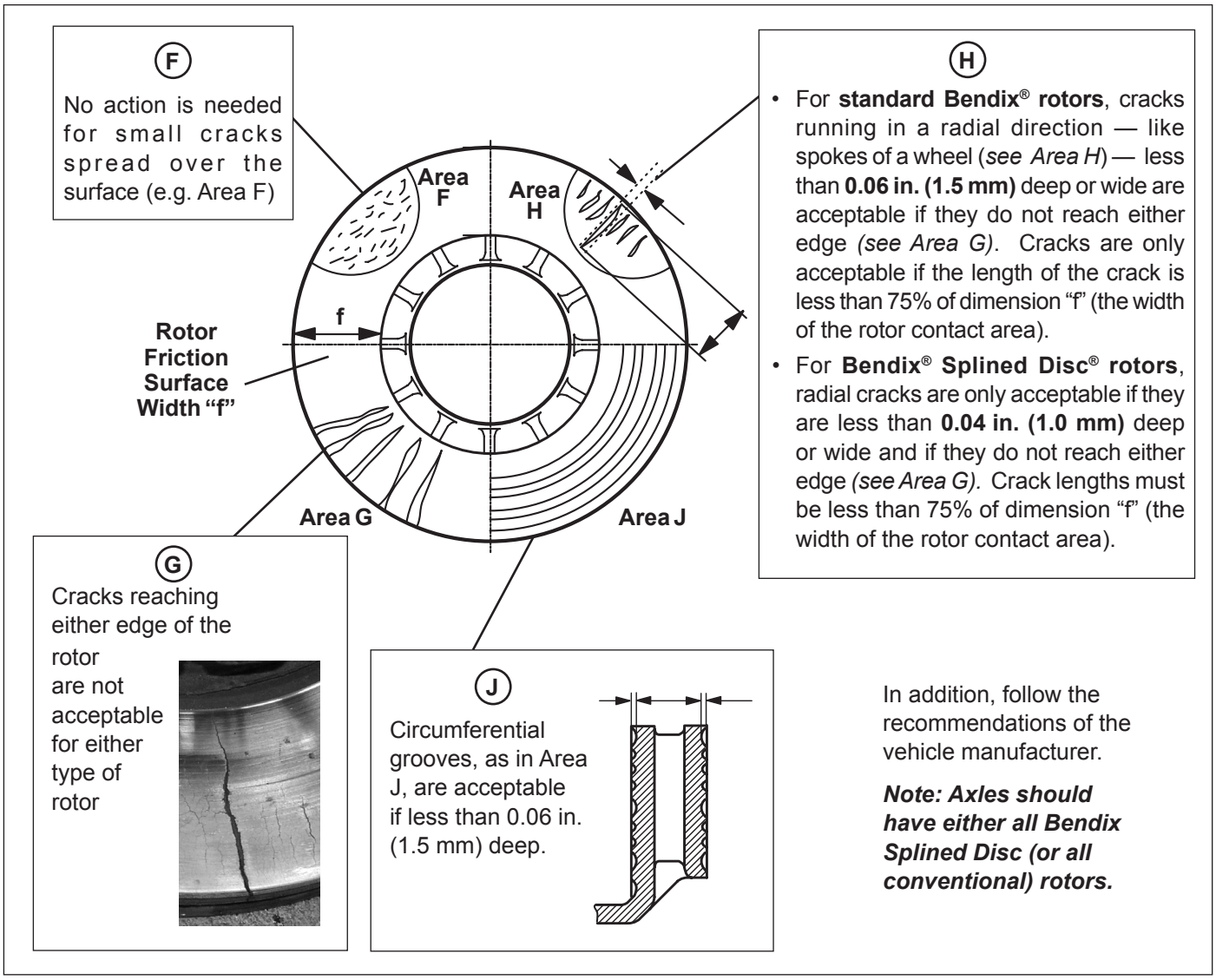

Figure 12 – Examples of Acceptable and Non-acceptable Rotor Cracks and Grooves

2.1.3 Rotor Quick Inspection

See Figure 12. See the various potential rotor conditions that you may find. *See the criteria below for whether the rotor needs to be replaced and/or scheduled for a full inspection.*

2.2 RUNNING CLEARANCE QUICK INSPECTION

CAUTION: Follow all safe maintenance practices.

On level ground, with the wheels chocked and the parking brake temporarily released, check for movement of the brake caliper. This small movement, less than 0.08" (2 mm) – approximately the thickness of a nickel – in the inboard/outboard direction indicates that the brake is moving properly on its guide pins.

If the caliper has no movement or appears to move greater than the distances noted above, a full wheel-removed inspection will be necessary *(See Section 4.1)*.

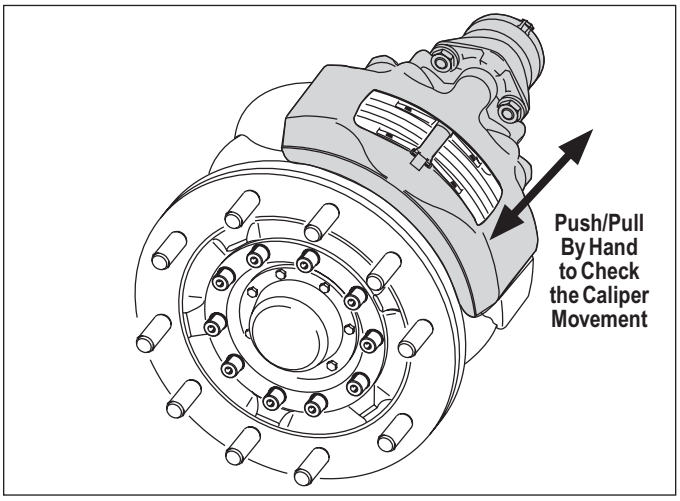

Figure 13 – Caliper Running Clearance (Wheel Not Shown)

SECTION THREE: TROUBLESHOOTING PROCEDURE FLOWCHART

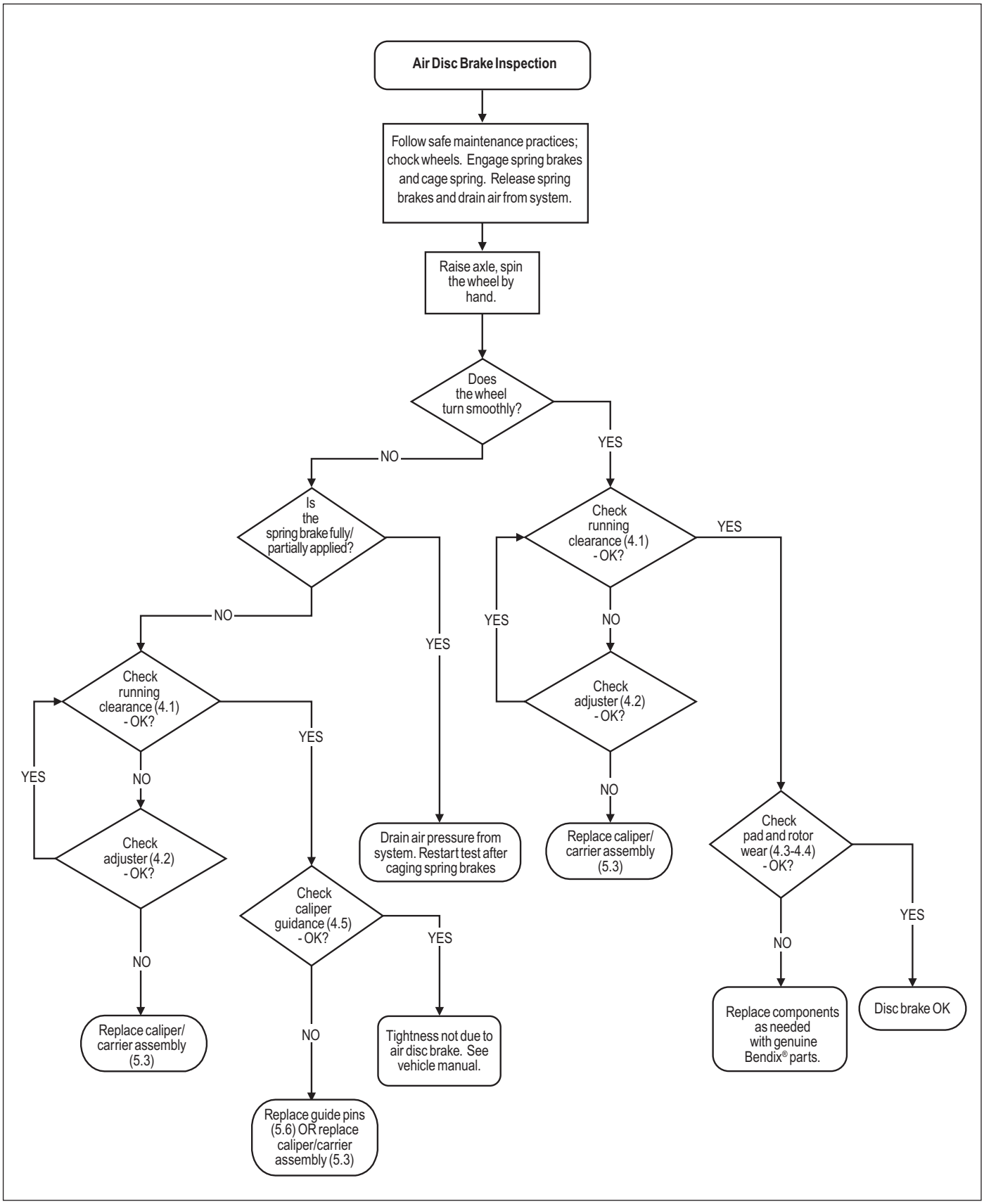

Figure 14 – Troubleshooting Bendix Air Disc Brakes

BENDIX® ADB22X™ TROUBLESHOOTING GUIDE

Component (Item / Condition)			Investigation	Specs	Procedure	What To Replace
Consumable Items: These are considered to be normal wear items and should be repaired as part of regular preventive maintenance.						
Disc Brake Pads	A	Worn	Measure the thickness of the total pad (friction material and backing plate).	Pads must be replaced when they reach 0.433 in. (11 mm).	Section 4.3	Replace the pads on both sides of the worn axle.
Disc Brake Pads	B	Uneven wear on single pad	Measure the thickness of the total pad in at least two (2) places at top and two (2) places at bottom, at least 1/2 inch from the edge.	The average difference of top vs. bottom, or left vs. right, should be no greater than 0.080 in. (2 mm).	Section 4.3.2	Replace the pads on both sides of the worn axle and replace the guide pins as needed.
Disc Brake Pads	C	Uneven wear on inboard vs. outboard	Measure the pad thickness as described for **Item B,** but also check guide pin wear and slide-ability.	Average difference inboard to outboard should be no greater than 0.138 in (3.5 mm).	Section 4.3.3	
Disc Brake Pads	D	Surface damage	Inspect for minor chips near the edge and cracks on face (permitted) vs. major sections damaged or missing.	*See Figure 24 in SD-23-7541.*	Section 4.3.3	Replace the pads on both sides of the worn axle.
Boots & Seals	E	Tears & cuts	Inspect the tappet and guide pin boots for cuts, cracks, and tears.	Any damage must be repaired.	Sections 4.5.4 & 4.6.2	Replace the damaged boots and replace the resultant internal corroded guide pins as needed.
Boots & Seals	F	Melting	Inspect as **Item E**, but also check the running clearance before removing the brake pads.	Any damage must be repaired.	*See Calipers* **Item L**	
Guide Pins	G	Binding	With the pads removed, the caliper should move freely by hand. Re-torque the carrier to torque plate bolts per the OE spec and procedure, if binding.	*See Figure 26 (slide) and Table 4 (torque) in SD-23-7541.*	Sections 4.5.1 & 5.3	Replace the worn guide pins as needed and replace the torque plate if the re-torque procedure does not resolve the issue.
Guide Pins	H	Excessive play	Feel for excessive play between the caliper and the carrier.	*See Figure 27 in SD-23-7541.*	Section 4.5.2	Replace the worn guide pins as needed.
Rotors	I	Worn	Measure the rotor thickness with a long jaw caliper.	Thickness must be greater than 1.46 in. (37 mm).	Section 4.4	Refer to the OEM recommendations for non-Bendix® rotors. For Bendix rotors, replace the rotors on both sides of the axle.
Rotors	J	Surface damage	Minor cracks and grooves are acceptable, but check for cracks over the outside edge.	*See Figure 25 in SD-23-7541 for surface details.*		Refer to the OEM recommendations for non-Bendix rotors. For Bendix rotors only, replace the rotor that is damaged.
Non-Serviceable: These are non-serviceable items and pending warranty terms; these issues may be covered under warranty.						
Calipers	K	Adjuster not rotating	If the 2nd sheer adapter breaks while turning the 10mm box-end wrench counterclockwise, the adjuster is seized.	Adjuster must turn in both directions with a hand wrench.	Section 4.4	Caliper only must be replaced with malfunctioning adjuster.
Calipers	L	Adjuster too tight, dragging brake	With the brakes released, check the running clearance between the tappet and the inboard pad.	The gap should be between 0.024 in. (0.6 mm) and 0.043 in. (1.1 mm).	Section 4.1	

Section Four

Section		Page
4.0	Wheel-Off Inspections	12
4.1	Caliper Movement Test	12
4.2	Adjuster Mechanism Inspection	13
4.3-4.4	Brake Pads and Rotors	14–16
4.3	Inspect the Brake Pads	15
4.4	Inspect the Rotor	16
4.4.3	Machining (Grinding or Turning) Rotors	16
4.5	Guide Pin Bearing Inspection	17–18
4.6	Tappet & Boot Assembly Inspection	18

4.0 WHEEL-OFF INSPECTIONS

CAUTION: During these inspections, follow all safe maintenance practices, including those on page 2 of this service manual. Also, follow the vehicle manufacturer's recommendations. When working on foundation brakes, be sure that the vehicle is on level ground, that the vehicle is parked by other means than the foundation brakes, and that the wheels are chocked.

4.0.1 Wheel Removal and Re-Installation

Refer to the vehicle manufacturer's recommendations for removing the wheel.

Note: When removing the wheel, inspect first to see that there is no contact between the caliper and axle, vehicle, chassis sections or carrier, etc. that may be impeding the free movement of the caliper.

⚠ WARNING

Not all wheels and valve stems are compatible with Bendix® Air Disc Brakes. Use only wheels and valve stems approved by the vehicle manufacturer to avoid risk of valve stem shear and other compatibility issues. After re-installing a wheel according to the vehicle manufacturer's recommendations, ensure that there is sufficient clearance between the tire inflation valve stem, the caliper, and the wheel rim, to avoid damage.

4.1 CALIPER MOVEMENT TEST

CAUTION: Follow all safe maintenance practices.

Remove the wheel. With the spring brakes released or caged, push the caliper assembly inboard on its guide pins. *Note: To fully release the spring brakes, ensure that the air system pressure is at least 90 psi.* Using a suitable tool (for example a large flat-blade screwdriver), press the inboard pad (12) away from the tappets. Check that there is no dirt, etc. in the gap, and clean if necessary. Then use two long-blade feeler gauges to measure – over the whole tappet surface – the gap between them and the inboard pad backplate. *(See Figure 16.)* The gap should be between 0.024 in. (0.6 mm) and 0.043 in. (1.1 mm). **If the gap is within the range given, the test is complete.**

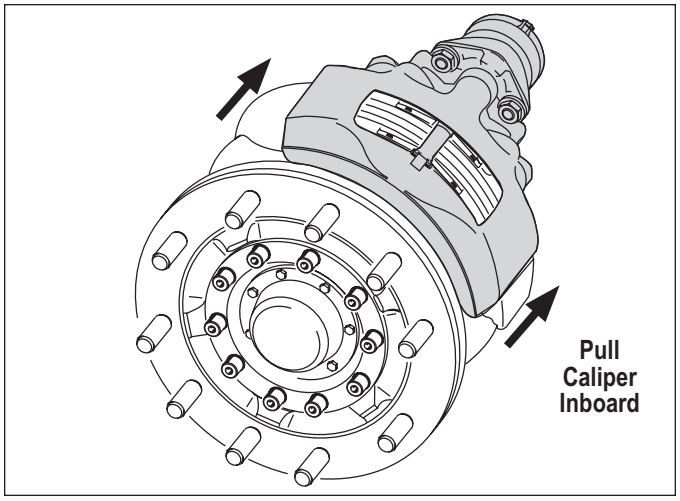

Figure 15 – Pull Caliper Inboard

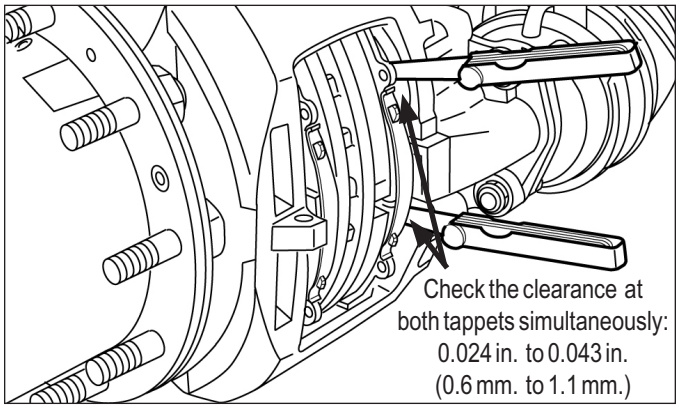

Figure 16 – Running Clearance Check

CAUTION: If the clearance is too wide, there is a danger of brake failure. If the clearance is too small, or if there is no gap at all, there is a danger of the brake overheating. These conditions must be corrected before returning the vehicle to service.

For further investigation, where there is some gap, *go to Section 4.2* and check the adjuster mechanism. Where there is no movement at all (and so no gap to measure), *go to Section 4.5 "Guide Pin Inspection."*

4.2 ADJUSTER MECHANISM INSPECTION

CAUTION: Follow all safe maintenance practices. Aside from the normal maintenance schedule, the adjuster mechanism inspection that follows is also carried out when the Caliper Movement Test (4.1) finds that the running clearance is too small or too large.

4.2.1 With the spring brake released (or caged), remove the adjuster cap (37) using the tab, taking care not to move the shear adapter (61). Note: One of two styles of adjuster cap (stamped metal or plastic adjuster cap) may be used.

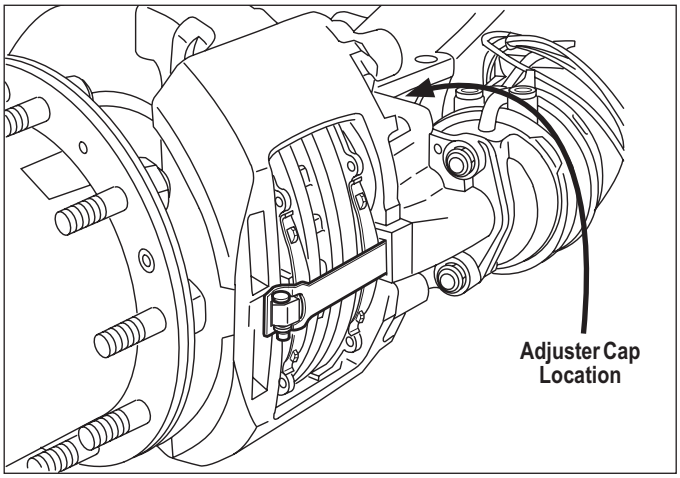

Figure 17 – Adjuster Cap Location

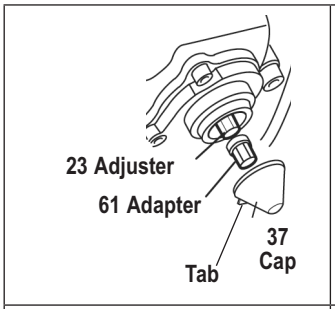

Figure 18 – Exploded View of Adjuster and Adapter

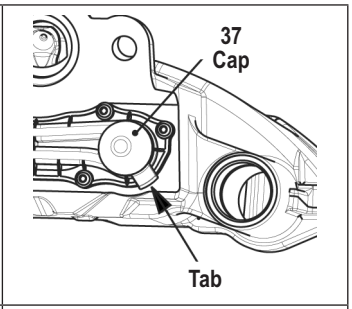

Figure 19 – Cap Installed: Tab Location

For illustration purposes, the exploded view (Figure 18) shows the adjuster (23) and shear adapter (61) separated. When using the adjuster mechanism, always have the shear adapter installed on the adjuster.

4.2.2 Using a 10 mm. six-point box wrench, turn the Shear Adapter (61) **counterclockwise** and listen for the sound of 3 clicks as the mechanism backs-off (increases) the running clearance. Note: Do not use an open-ended wrench as this may damage the adapter. *See Figure 20.*

CAUTION:
Never turn the adjuster (23) without the shear adapter (61) installed. The shear adapter is a safety feature and is designed to prevent excessive torque from being applied to the adjuster. The shear adapter will fail (by breaking) if too much torque is applied.

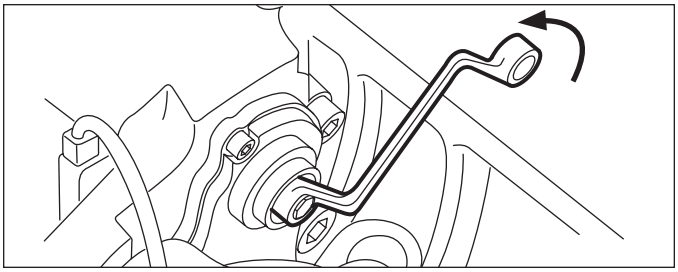

Figure 20 – Backing-Off (Increasing) the Running Clearance

If the shear adapter fails, you may attempt a second time with a new (unused) shear adapter.

Note: Always double-check that the spring brake is released (where applicable) if a shear adapter fails; if this step was missed, the shear adapter will break off, and it may appear that the caliper is seized.

In cases where a second failure of the shear adapter confirms that the adjustment mechanism is seized, the caliper must be replaced.

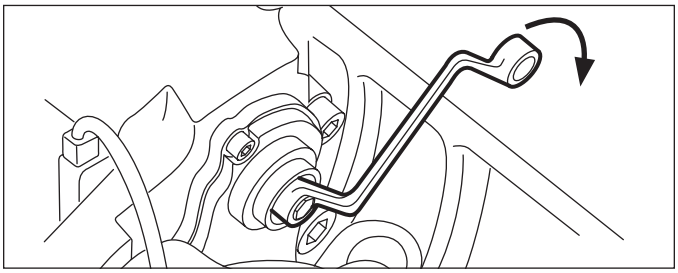

Figure 21 – Applying Moderate Applications of the Brakes: The Wrench Moves Clockwise as the Running Clearance is Diminished

4.2.3 Where the adjuster mechanism is able to be backed-off normally, position a box-end wrench on the shear adapter so that it can turn clockwise freely without coming into contact with parts of the vehicle *(See Figure 21).* Make five to ten moderate applications of the brakes [at about 30 psi (2 Bar)], and observe that the box-end wrench or socket should turn clockwise in small increments.

NOTE: As the number of applications increases, the turning movement will decrease (as the brake reaches its normal calibration point).

If the box-end wrench does not: (a) turn at all; (b) turns only with the first application; or (c) turns forward and backward with every application, the automatic adjuster has failed and the caliper/carrier assembly must be replaced.

After completing these wheel-off tests, Bendix recommends installing a new adjuster cap (lightly greased using white, lithium-based grease) when returning the brake to service. Ensure that the tab is in the position shown in Figure 19.

4.3-4.4 BRAKE PADS AND ROTORS

CAUTION: Follow all safe maintenance practices.

If electronic wear sensors are present, *see Section 5.2.*

If dust covers are present, *see Section 5.1.*

See Figure 23. While pressing down against the pad retaining bar (11), remove and retain the clip (26), washer (45) and pin (44). Remove the pad retainer bar (11). Bendix recommends that these items be replaced with new *(See available kits and parts, Section 5.0)*.

Follow the steps in Section 4.2 for backing-off the adjuster mechanism. Slide the caliper inboard then outboard to permit easy removal of the brake pads.

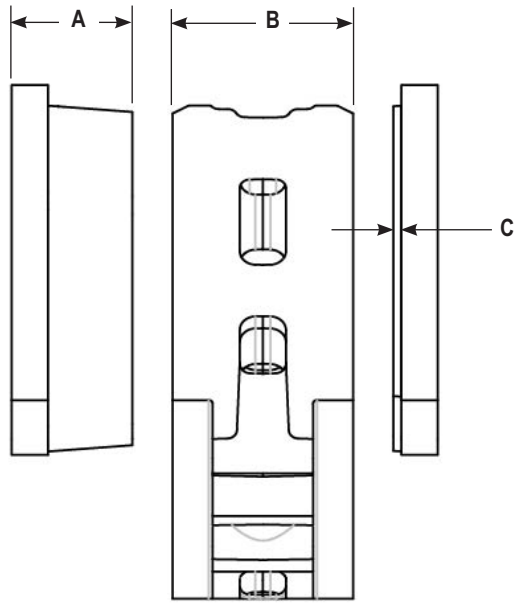

A	New pad thickness (1.181 in.) (30 mm.) BX276: Refer to diagram below for measurement locations BX275/BX283+: Measure anywhere on the backing plate surface.
B	New rotor thickness (1.77 in.) (45 mm.) Minimum rotor thickness (1.46 in.) (37 mm)
C	Minimum friction material thickness (0.080 in.) (2 mm.) - approximately the thickness of a nickel.

Measurement locations for BX276 brake pads.
Do not measure on raised surfaces.

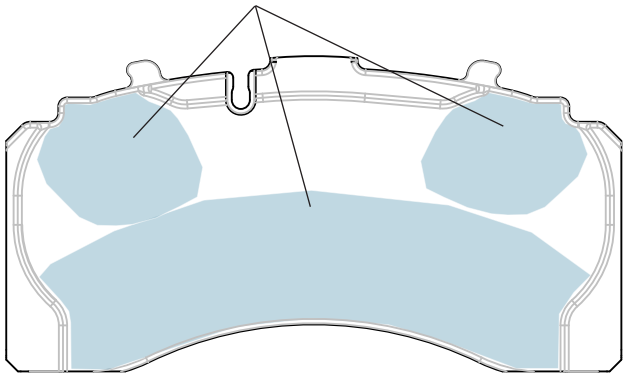

Figure 22 – Pad and Rotor Dimensions

See Figure 22 for initial brake pad and rotor dimensions, as well as minimum acceptable dimensions.

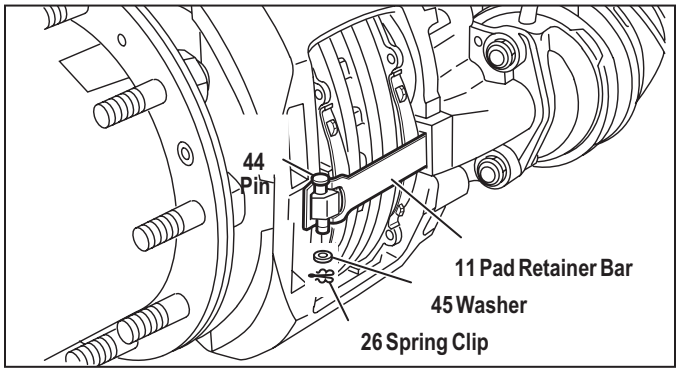

Figure 23 – Retainer Bar Removal

4.3 INSPECT THE BRAKE PADS

Regular inspection of the brake pads (even for vehicles that use an electronic wear indicator) is an important part of vehicle maintenance.

4.3.1 See Figure 22. If the thickness of the friction material – dimension "C" – is less than 0.080 in. (2 mm.), the pads must be replaced.

Bendix® ADB22X™, ADB22X-V™ and ADB22X™-LT air disc brakes use 0.35 in. (9 mm.) backing plates, so dimension "D" (the combined pad and backing plate thickness) must be a minimum of 0.43 in. (11 mm.).

4.3.2 Check for uneven end-to-end pad wear. If the difference in wear is greater than 0.080 in. (2 mm.), replace the brake pads and also inspect the guide pins. *(See Section 4.5.)*

4.3.3 Compare the thickness of the inboard and outboard pads of each set. If the difference between the inboard and outboard pad thickness is greater than 0.138 in. (3.5 mm.), replace the brake pads and inspect the guide pins *(See Section 4.5)*.

If the results of the pad inspections are within the acceptable range, inspect the pad surface. *(See Figure 24.)*

Figure 24 – Brake Pad Surface Inspection

Minor damage at the edges is permitted, but replace the pads if major damage on the surface of the pad is found.

When replacing brake pads, Bendix strongly recommends that all the brake pads on an axle be replaced at one time. *See Section 5.1 for the pad replacement procedure*. Also, see the vehicle manufacturer's recommendations found in the operator's manual.

Bendix air disc brakes are precision-engineered braking mechanisms. The "friction couple" braking characteristics have been carefully optimized – and the rotor design and materials have been matched with special formulation brake pads for optimal performance. In all cases, use brake pads with the type of backing plate and lining material originally supplied by the vehicle manufacturer.

CAUTION: When replacing brake pads and rotors, use only Bendix® brand replacement pads and rotors and/or those approved by the OEM. Non-approved replacement disc pads or rotors can cause excess wear to brake components, and can increase the risk of rotors cracking, etc.

4.4 INSPECT THE ROTOR

CAUTION: Follow all safe maintenance practices.

Identify if the rotor is a Bendix® Splined Disc®, or Bendix® brand conventional rotor (S*ee Section 1.03*). Rotors should be inspected regularly *(See Section 2.0 for recommended inspection schedule)* and at each pad change.

4.4.1 Measure the thickness of the brake rotor at the thinnest point (Dimension "E" in Figure 22). Avoid measuring near the edge of the rotor as minor burrs may result in an inaccurate measurement. **For Bendix brand rotors, replace the rotor when the minimum thickness of 1.46 in. (37 mm.) is reached.** For other brands of rotors, refer to the rotor manufacturer's guidelines.

4.4.2 Inspect the rotor surface. *See Figure 25.* The type of rotor, and also the size, depth and direction of the imperfections, must all be considered.

NOTE: If surface wear conditions F through J are in the permitted range, the rotor is still usable until it reaches the minimum acceptable thickness for the rotor manufacturer's guidelines.

4.4.3 Machining (Grinding or Turning) Rotors

Bendix brand rotors are normally service-free. In the case of severe grooving of the entire friction surface, however, **CONVENTIONAL ROTORS** may be turned when changing pads, to increase the load-bearing surface.

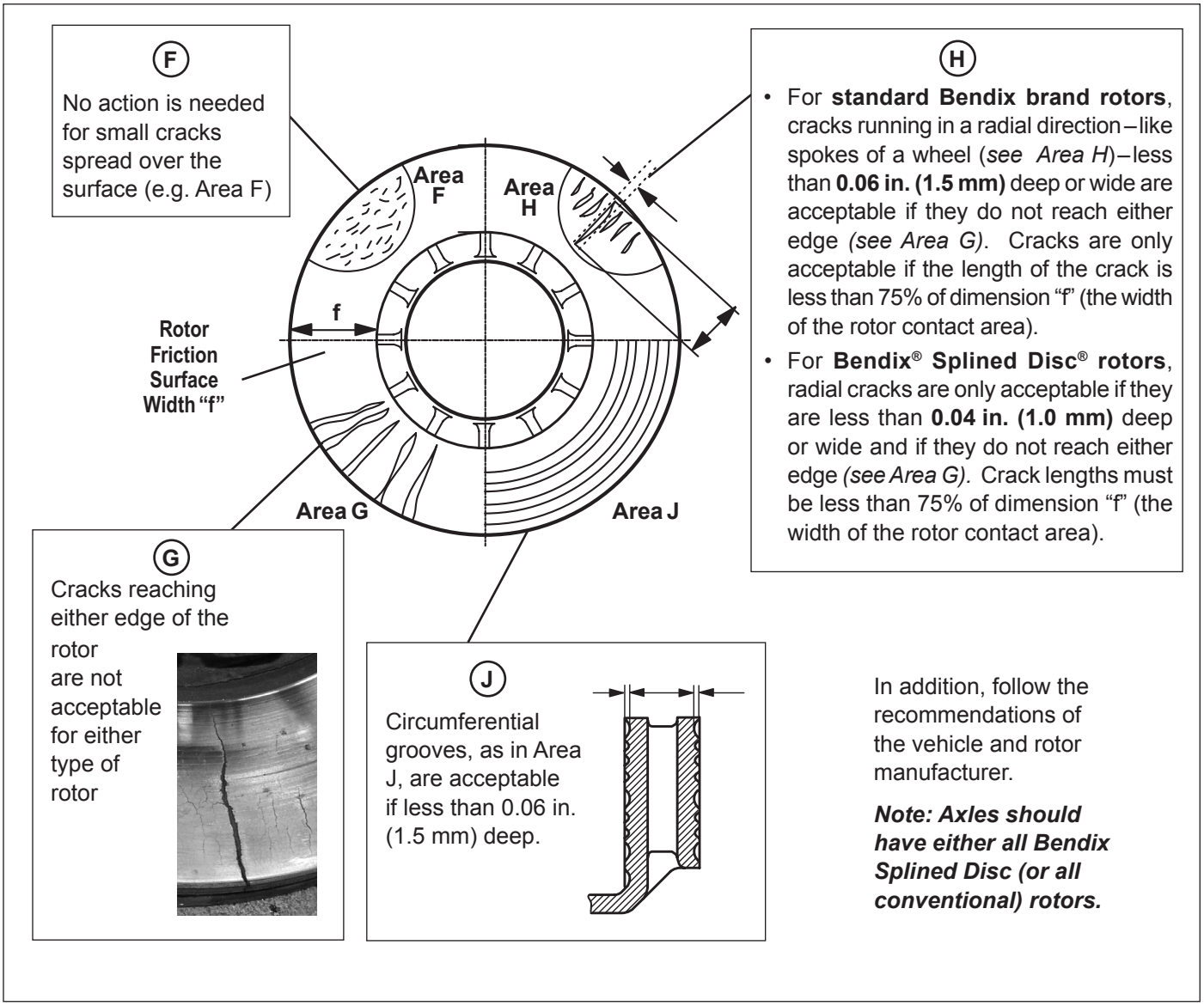

Figure 25 – Examples of Acceptable and Non-acceptable Rotor Conditions

MACHINING OF BENDIX® SPLINED DISC® ROTORS IS NOT PERMITTED.

CAUTION: Always maintain air disc brake pads and rotors within specifications. Excessive pad or rotor wear will degrade braking performance.

Periodic inspection of the Bendix Splined Disc attachment hardware is recommended to ensure optimum braking performance. Bendix recommends verifying the torque on the spring element fasteners whenever a brake inspection is performed.

⚠ WARNING

AFTER MACHINING/TURNING, THE MINIMUM ROTOR THICKNESS FOR BENDIX® BRAND ROTORS MUST BE AT LEAST 1.535 - 1.575 IN. (39 - 40 MM.). FOR OTHER BRANDS, CONSULT THE MANUFACTURER'S GUIDELINES. ALSO, CHECK THE VEHICLE MANUFACTURER'S RECOMMENDATIONS. FAILURE TO COMPLY MAY RESULT IN BRAKE FAILURE AND IN SERIOUS INJURY OR DEATH. MACHINING OF BENDIX SPLINED DISC ROTORS IS NOT PERMITTED.

4.4.4 Rotor Replacement

An axle is permitted to have only all Bendix Splined Disc, or all conventional, rotors.

When replacing rotors, be sure to adhere to the vehicle manufacturer's recommendations, including bolt tightening torques. It is recommended to install only Bendix® brand rotors, and also that the pads should be replaced (as an axle set) at the same time.

Non-Bendix® brand rotors. If a non-Bendix brand rotor is used, confirm that it complies to the vehicle manufacturer's recommendations.

CAUTION: The use of <u>non-approved</u> brake rotors may reduce levels of safety and invalidate the warranty.

See Section 5.7 for reinstallation procedures.

4.5 GUIDE PIN BEARING INSPECTION

CAUTION: Follow all safe maintenance practices.

This guide pin inspection should be carried out if the technician cannot move the caliper during a Caliper Movement Test (*See Sections 2.2 and/or 4.1*).

Measure the range of travel along the guide pin bearings:

4.5.1 Remove the Pads *(See Section 4.3)*. Using hand pressure only (no tools), the caliper (1) should slide freely along the whole length of the guide pins. This movement should be at least 0.95 inch (25 mm) when the pads are not present. If the movement is less than this amount, replace the caliper/carrier assembly.

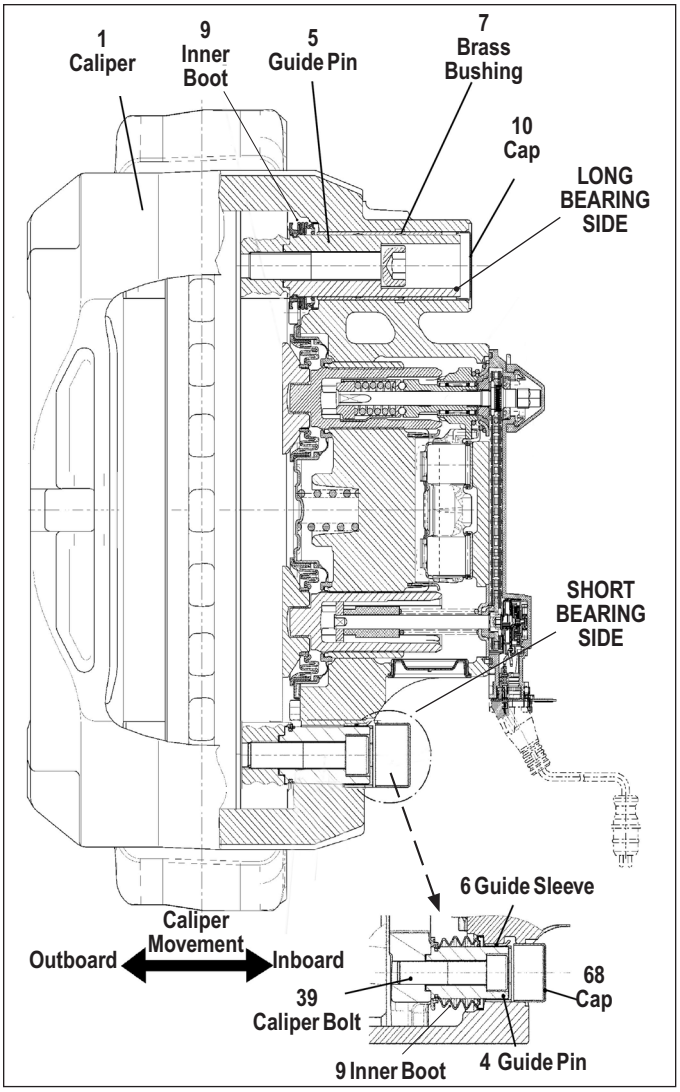

Figure 26 – Guide Pins

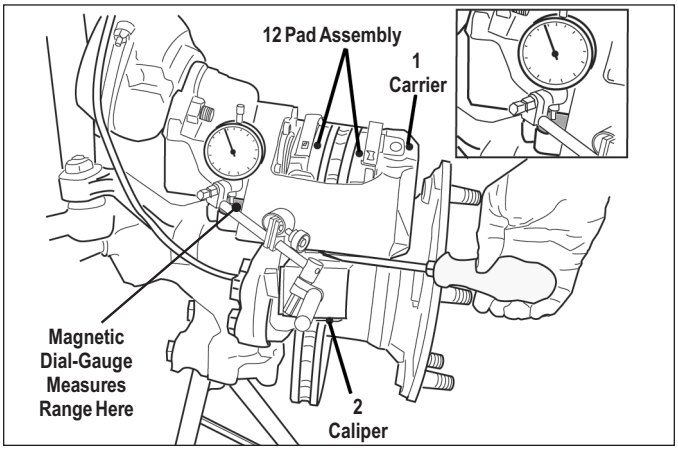

Figure 27 – Magnetic Dial-Gauge In Use

Measure the "play" (range of movement) in the guide pin bearings:

4.5.2 *See Figures 26 and 27.* With the wheel removed, remove the pad retainer bar (11). Temporarily replace the pads with two new pads (12). Attach a magnetic dial-gauge holder to the carrier (2) on the short bearing side of the caliper (1). Use the measuring point on the caliper (1) – *see the callout in Figure 27*. Press the caliper in the direction of the carrier (2) and set the dial-gauge to zero.

4.5.3 Place a suitable tool (e.g. a large flat-blade screwdriver) between carrier (2) and caliper (1) and use light hand force to move the caliper away from the carrier, until the movement stops. Read the maximum value on the dial-gauge. *See Figure 27.*

If the value is greater than 0.039 in. (1.0 mm), replace the guide pin bushings *(See Section 5.6)* OR replace the caliper/carrier assembly *(See Section 5.3)*.

Inspect the guide pin inner boots:

4.5.4 *See Figures 28 and 29.* With the pads removed, slide the carrier by hand to the inboard position *(See Figure 28)*. By looking through the opening where the pads are installed – and also from below – inspect the inner boot (9) for each of the guide pins. **INSPECT FOR DAMAGE, CUTS AND CRACKS.** Replace damaged boots immediately to prevent dirt and/or moisture affecting the movement of the guide pins *(See Section 5.4)*. Damaged or corroded guide pins will impair the operation of the brake.

In addition, during installation, the boots are compressed to minimize the amount of air trapped within them. Observe as you move the carrier back towards the outboard position; the boots should only expand outwards a small amount due to trapped air. The boots should normally (due to their ribbed construction) contract back into place as the caliper moves on the guide pins. The boots are not air-tight and so some trapped air is normal; excess air trapped will dissipate.

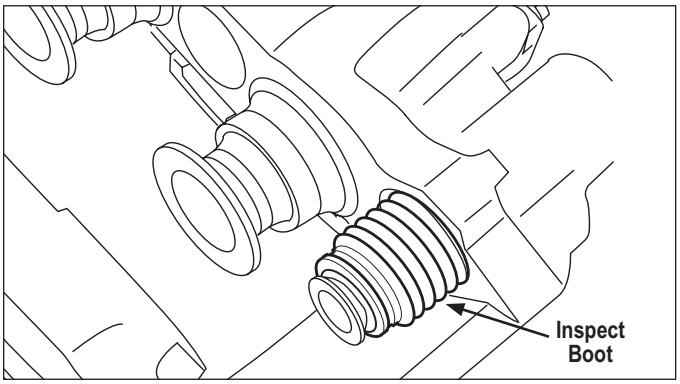

Figure 28 – Guide Pin Boot Inspection (This Image Does Not Show the Carrier)

4.5.5 Inspect the original pads *(See Section 4.3)* and they may be reused if they are in good condition with sufficient pad thickness.

4.6 TAPPET AND BOOT ASSEMBLY INSPECTION

4.6.1 In order to inspect the tappet and boot assembly, remove the pads (12) *(See Sections 4.3 or 5.2)* and advance the shear adapter (61) clockwise.

CAUTION: NEVER EXTEND THE TAPPET MORE THAN 1.75 in. (44.5 mm). *See Figure 29.* **Over-extending the tappet will result in the tappet losing engagement with the synchronizing mechanism. Since the mechanism can only be set at the manufacturing plant, the *caliper/carrier assembly must be replaced* if this happens.**

4.6.2 **INSPECT THE TAPPET AND BOOT ASSEMBLIES (13) FOR EVIDENCE OF DAMAGE, CUTS, CRACKS, TEARS, AND EVIDENCE OF CORROSION, ETC.** Damaged boots lead to the penetration of dirt and moisture, and can promote corrosion and impair the operation of the brake. Replace as necessary *(See Section 5.5)*.

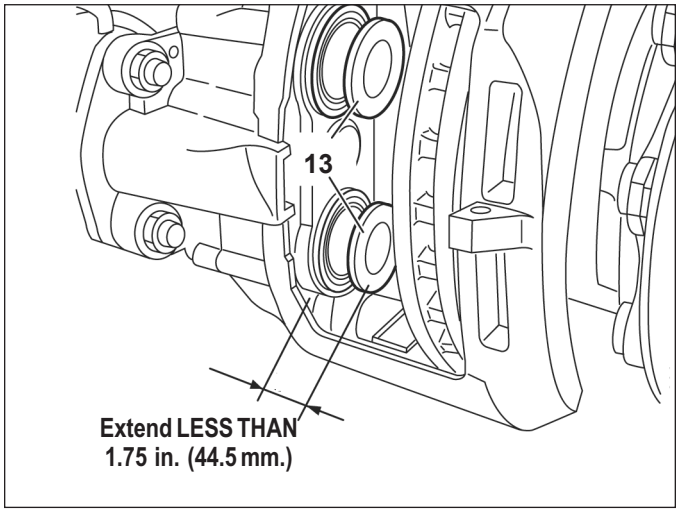

Figure 29 – Permitted Tappet Extension

Where the tappets and boots pass the inspection, retract the tappets using the shear adapter.

When installed, the boots are compressed to minimize the amount of air trapped within them. Observe as you move the tappet back using the shear adapter; the boots should only expand outwards a small amount due to trapped air. The boots should normally (due to their ribbed construction) contract back into place as the tappets move. Note: If the bellows have excess trapped air, then with the tappets retracted, remove and re-install the actuator to vent the excess trapped air *(See Section 5.4).*

Follow the reinstallation steps for the brake pads *(See Section 5.2)*.

SECTION FIVE: MAINTENANCE KITS AND PROCEDURES

Section Five

Section		Page
5.0	Maintenance Kits	20-21
5.1	Air Disc Brake Shield Kit	22
5.2	Pad Replacement	23
5.3	Caliper/Carrier/Actuator Assembly	25-26
5.4	Spring or Service Brake	28
5.5	Tappet & Boot Assemblies, and Tappet Inner Seal	29-32
5.6	Guide Pin and Boot Assemblies	33-38
5.7	Bendix® Splined Disc® Hub Rotor	39-41

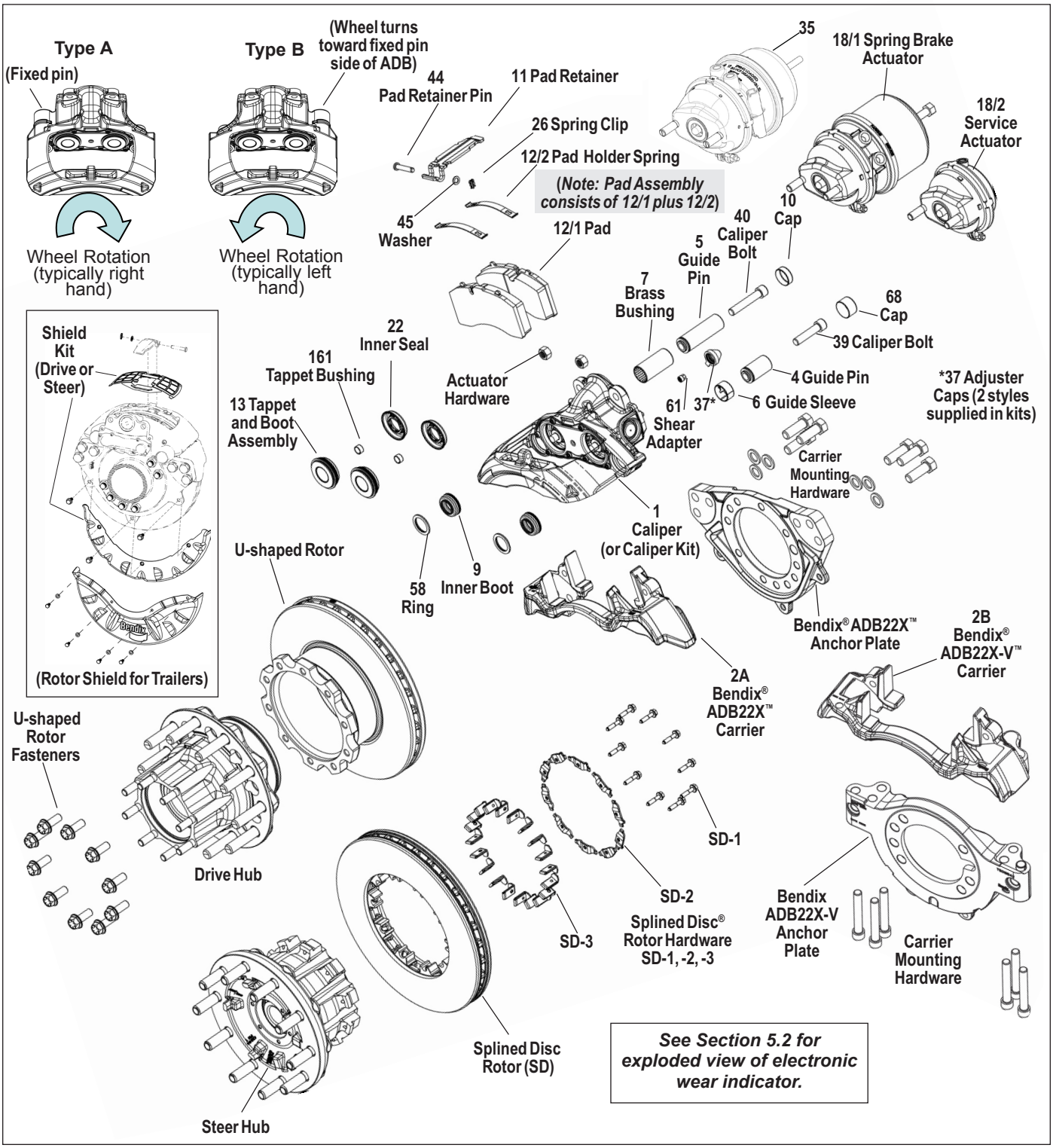

Figure 30 – Exploded View - Bendix® ADB22X™, ADB22X-V™, and ADB22X™-LT Air Disc Brakes

5.0 MAINTENANCE KITS FOR BENDIX® ADB22X™, ADB22X-V™ AND ADB22X™-LT AIR DISC BRAKES

Below is a list of some of the available kits. *See Figure 30 for an exploded view showing the components listed.*

Kit	Piece Number	Components Included in Kit
Pad Kit (axle set)	K070796	BX275 Kit (11, 12/1, 12/2, 26, 37, 44, 45, 61) Standard Service
	K109113	BX283+ Kit (11, 12/1, 12/2, 26, 37, 44, 45, 61) Severe Service
	K129276	BX276 Kit (11, 12/1, 12/2, 26, 37, 44, 45, 61) Trailer and Truck
Splint Kit (box of 25)	803151	(26)
Shear Adapter (box of 10)	802455	(61)
Tappet/Boot Kit (wheel end kit)	K092079	(13, 22, 161)
Adjuster Cover (box of 10)	802643	(37)
Guide Pin, Seal and Boot Kit (wheel end kit)	803114	(4, 5, 6, 7, 9, 10, 37, 39, 40, 58, 61, 68)
Guide Pin Boot Kit	K023768	(9, 10, 37, 39, 40, 58, 61, 68)
Guide Pin Grease	II14525	White (5 grams)
	K021964	White (500 grams)
Service Actuators	K028039	Bendix® Type 14 Universal (9, 18/2)
	K028226	Bendix® Type 16 Universal (9, 18/2)
	K028022	Bendix® Type 18 Universal (9, 18/2)
	K028225	Bendix® Type 20 Universal (9, 18/2)
	K028238	Bendix® Type 22 Universal (9, 18/2)
	K028252	Bendix® Type 24 Universal (9, 18/2)
NG-3 Piston-Style Spring Brake Chambers	K027557	Bendix® Type 18/16 Piston Style Truck/Trailer Universal (1, 18/1)
	K025670	Bendix® Type 18/24 Piston Style Truck/Trailer Universal (1, 18/1)
	K025669	Bendix® Type 20/24 Piston Style Truck/Trailer Universal (1, 18/1)
Double-Diaphragm-Style Spring Brake Chambers	K042457	Bendix® Type 16/24 Double Diaphragm Style (35)
	K043329	Bendix® Type 18/24 Double Diaphragm Style (35)
	K041960	Bendix® Type 20/24 Double Diaphragm Style (35)
	K043148	Bendix® Type 22/24 Double Diaphragm Style (35)
	K043270	Bendix® Type 24/24 Double Diaphragm Style (35)
Caliper-Carrier Assembly (Includes 803114)	K081142	Bendix® ADB22X™ 12° Steer and Drive Axial “A” (2A, 1)
	K081143	ADB22X 12° Steer and Drive Axial “B” (2A, 1)
	802984	ADB22X 0° Trailer Axial “A” (2A, 1) [Zero degree dual-beam carrier.]
	802985	ADB22X 0° Trailer Axial “B” (2A, 1)
	K149714	ADB22X-LT 0° Trailer Axial "A" [Caliper kit (1)]
	K149715	ADB22X-LT 0° Trailer Axial "B" [Caliper kit (1)]
	K081256	ADB22X 12° Steer and Drive Vertical “A” (2B, 1)
	K081257	ADB22X 12° Steer and Drive Vertical “B” (2B, 1)
Caliper Kit (rationalized) Includes 803114	K081258	ADB22X 12° Steer and Drive Axle “A” (1)
	K081259	ADB22X 12° Steer and Drive Axle “B” (1)
	K019180	ADB22X 0° Trailer Axle “A” (1)
	K019181	ADB22X 0° Trailer Axle “B” (1)
Carrier Kit	K051853	Steer and Drive Axle, Axial (2A, 9, 10, 20, 39, 40, 58, 61, 68)
	K043288	Trailer Axle, Axial (2A, 9, 10, 20, 39, 40, 58, 61, 68)
	K056559	Steer and Drive Axle, Vertical (2B, 9, 10, 20, 39, 40, 58, 61, 68)
Hubs	K020505	Splined Disc® Brake - Aluminum - FF Steer, LMS Bearing Package (Steer Hub)
	803134	Splined Disc Brake - Aluminum - FL Steer, LMS Bearing Package (Steer Hub)
	802847	Splined Disc Brake - Aluminum - R Drive, LMS Bearing Package (Drive Hub)
	K020514	Splined Disc Brake - Aluminum - FF Steer, Standard Bearing Package* (Steer Hub)
	803138	Splined Disc Brake - Aluminum - FL Steer, Standard Bearing Package* (Steer Hub)
	802859	Splined Disc Brake - Aluminum - R Drive, Standard Bearing Package* (Drive Hub)
	K045298	Splined Disc - Aluminum - "TN" Trailer, Standard Bearing Package* (Drive Hub)
	K045297	Splined Disc - Aluminum - "TP" Trailer, Standard Bearing Package* (Drive Hub)
	See hub supplier for these standard hub products	U-shaped - Iron/Aluminum, LMS/Standard Bearing Packages
		Flat - Iron/Aluminum, LMS/Standard Bearing Packages

Table 2 – Maintenance Kits

Kit	Piece Number	Components Included in Kit
Bendix® Splined Disc® Rotor Attaching Kit	K037767	All Splined Disc® Rotor Applications (SD-1, SD-2, SD-3)
Rotors	802081	Severe-Duty 138mm U-shaped Rotor and Fasteners
	K038573	Heavy-Duty 138mm U-shaped Rotor and Fasteners
	802082	Severe-Duty 150mm U-shaped Rotor and Fasteners
	K038574	Heavy-Duty 150mm U-shaped Rotor and Fasteners
	802083	Severe-Duty Splined Disc Kit (SD-1, SD-2, SD-3, SD)
	802569	Heavy-Duty Splined Disc Kit (SD-1, SD-2, SD-3, SD)
Shields	803129	(Dana-brand) Trailer Axle Pad & Rotor Shield Kit
	803130	Axial Drive Axle Pad & Rotor Shield Kit
	802948	Pad Shield Kit
	K032135	Vertical Drive Axle Pad & Rotor Shield Kit
	K022168	Vertical Drive Axle Rotor Shield

Table 2 – Maintenance Kits (continued)

See the Bendix Quick Reference Catalog (BW1114) for maintenance kits for other Bendix® brand air disc brakes.

5.0.1 GENERAL INFORMATION ABOUT BENDIX® AIR DISC BRAKE MAINTENANCE

When working on Bendix® Air Disc brakes, please note the following:

- Read and follow the Safe Maintenance Practices on page two.
- Depending on the particular axle, the technician may need to remove the caliper/carrier to allow sufficient access to perform the work.
- **CAUTION: When using a hoist to support the air disc brake, do not attempt to use the pad retainer bar as a bracing point as it is not designed to support the weight of the brake. Instead, use a brace (or chain) wrapped around the entire brake to attach the hoist.**
- When replacing bearings – or for any other maintenance procedure where the technician needs to remove the caliper/carrier assembly from the vehicle to perform the maintenance – **replacement caliper/carrier bolts will be required.** Please note that due to the high torque required, the original bolts cannot be reused. The bolts are available from the vehicle manufacturer.

⚠ WARNING

- **Not all wheels and valve stems are compatible with Bendix Air Disc Brakes. Use only wheels and valve stems approved by the vehicle manufacturer to avoid risk of valve stem shear and other compatibility issues.**

5.0.2 SERVICE DVD

Order Bendix part number **BW7356** for a DVD showing the full set of maintenance procedures included in this Service Data sheet.

Kit	See Section	Remove Brake Pads? Section 5.2	Remove Caliper/ Carrier from Vehicle? Section 5.3	Remove Actuator from Caliper? Section 5.4
Dust Shields	Section 5.1	Not Typically	NA	NA
Pad Kit (axle set)	Section 5.2	Yes	No	No
Caliper Kit (rationalized)	Section 5.3	Yes	Yes	Yes
Carrier Kit	Section 5.3	Yes	Yes	Yes
Service Actuator	Section 5.4	No	Not Typically	Yes
Spring Brake Actuator	Section 5.4	No	Not Typically	Yes
Tappet/Boot Kit (wheel end kit)	Section 5.6	Yes	Typically	Typically
Guide Pin, Seal and Boot Kit (wheel end kit)	Section 5.7	Yes	Typically	Typically
Hubs	Section 5.8	Yes	Yes	Yes
Splined Disc® Rotor Attaching Kit	Section 5.9	Yes	Yes	Yes
Rotor	Section 5.10	Yes	Yes	Yes

Table 3 – Other Required Sections for Maintenance Kits

5.1 AIR DISC BRAKE SHIELD KIT

5.1.1 **CAUTION: Follow all safe maintenance practices, including those listed on page two of this document. Park the vehicle (by other means than the foundation brakes) on level ground and chock the wheels.**

Note: Most torque plates manufactured after January 1, 2007 have the required torque plate tabs to permit these shields to be mounted.

This shield kit includes a brake pad shield, a rotor shield and the required attaching hardware for use in Bendix® ADB22X™, ADB22X-V™ and ADB22X™-LT Air Disc Brake applications where external contamination and excessive road debris is a concern. Brake pad and rotor shields can greatly reduce damage and/or premature wear of pads and rotors under these conditions.

During installation, verify that once the shield(s) are installed they will not come into contact with any vehicle components, suspension, housings, etc. through the full range of motion of the wheel. Keep in mind the particular use of the vehicle, the orientation of the brake on the axle and torque plate, the proximity of other axles, and/or the wheel/tire being used.

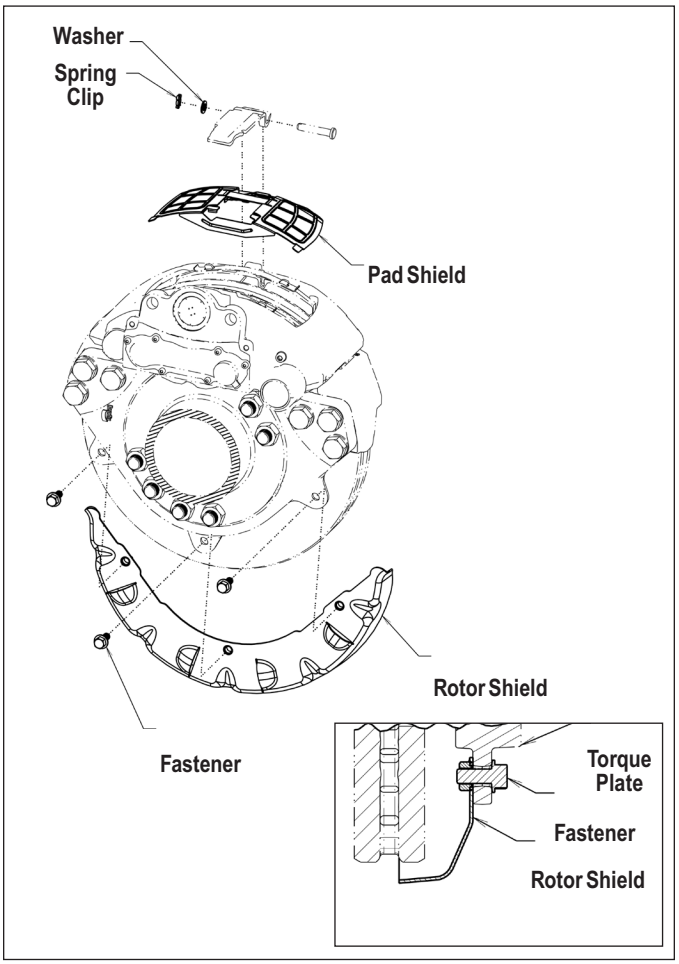

Figure 31 – Drive or Steer Axle Exploded View with Inset Showing Rotor Shield Installation

5.1.2 Remove and discard the spring clip and washer from the pad retainer pin. Remove and retain the retainer bar and retainer pin. Position the pad shield as shown and reinsert the retainer bar. Install the retainer pin. Use the included spring clip and washer to secure the retainer pin. Check that the pad shield is held securely in place by the retainer bar. *See Figure 31 or 32.*

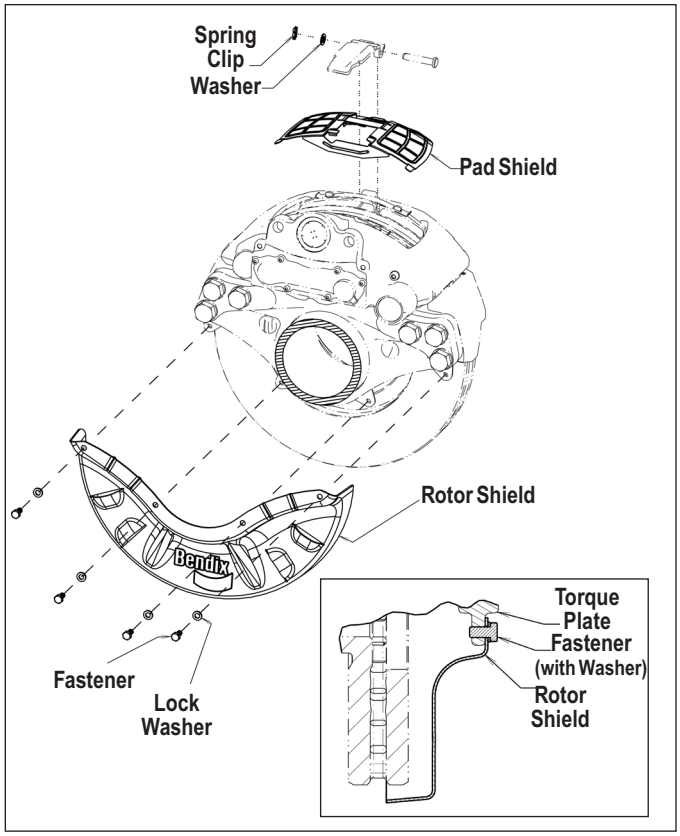

Figure 32 – Trailer Axle Exploded View with Inset Showing Rotor Shield Installation

5.1.3 **Drive or Steer Axle Rotor Shields** (*See Figure 31*). Position the rotor shield *between the torque plate and the rotor*. The supplied cap screws pass through the mounting tabs in the torque plate and install into the shield. Torque cap screws to 44 ft-lbs (528 in-lbs).

5.1.4 **Trailer Axle Rotor Shields** (*See Figure 32*). Position the rotor shield with *the torque plate between the shield and the rotor*. With one (supplied) lock washer in place on each cap screw, pass the screws through the shield before mounting onto the threaded torque plate holes. Torque the cap screws to 24 ft-lbs (288 in-lbs).

Note: The installation of air disc brake shields does not eliminate the need for periodic maintenance and inspection of the air disc brake and entire wheel end for damage and/or wear. In addition, the truck and trailer manufacturer's specific criteria for the brake shield requirements on air disc brakes should be consulted before either installing or removing air disc brake shields from a wheel end(s).

5.2 PAD REPLACEMENT

5.2.1 **CAUTION: Follow all safe maintenance practices, including those listed on page 2 of this document. Park the vehicle (by other means than the foundation brakes) on level ground and chock the wheels.**

The Bendix DVD (BW7356) shows this procedure.

Important: If the vehicle is equipped with spring brakes, cage the spring brakes on all axles to be worked on. Consult the vehicle manufacturer's instructions as necessary. *For Bendix® piston-style, see Section 5.4.*

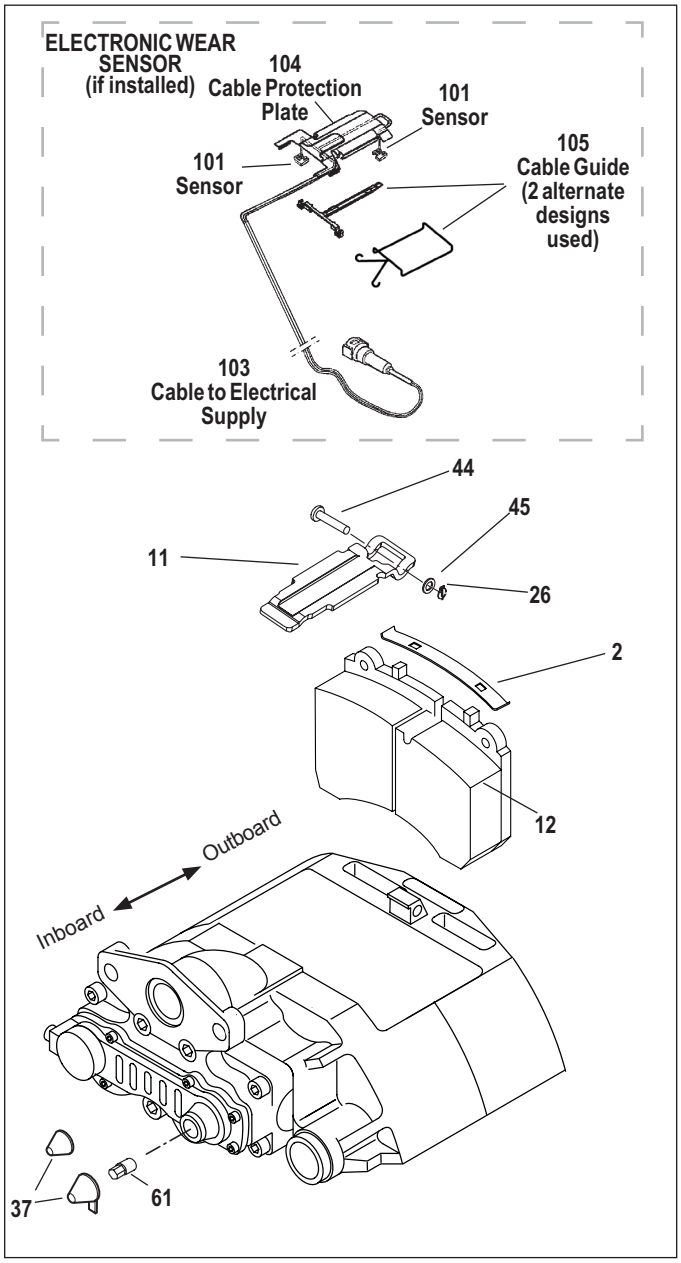

Figure 33 – Pad Replacement

5.2.2 Raise the complete axle to be worked on until the tires clear the ground. See the vehicle maintenance manual instructions for removing the wheels.

5.2.3 If the air disc brake is equipped with an electronic wear sensor indicator *(see top of Figure 33)*, remove and retain the mounting hardware for the cable protection plate. The cable protection plate can then be set aside while servicing the pads. Note the position of the sensors in the brake pad channels, and carefully remove them. In most cases you do not need to release the cable connector in order to move the sensors away from the pad installation work area. Inspect the wear sensors – replace if damaged or abraded.

5.2.4 *See Figure 34.* Remove and discard the pin retention clip (26) and washer (5).

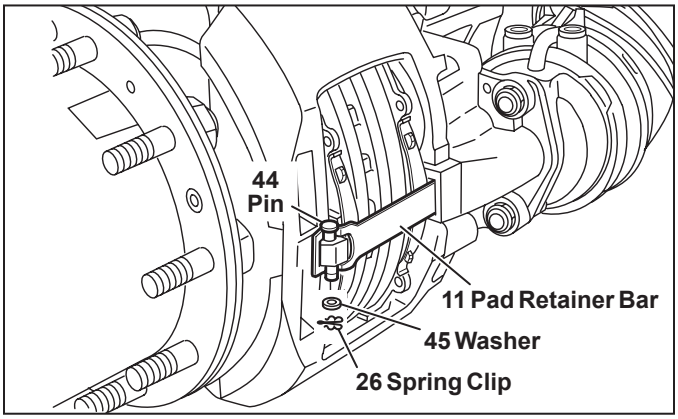

Figure 34 – Pad Retainer Bar Removal

5.2.5 While pressing against the pad retainer bar, remove the pin (11). Discard the pad retainer bar.

5.2.6 With the spring brake released (or caged), remove the adjuster cap (37) using the tab, taking care not to move the shear adapter (61). Note: Two sizes of adjuster caps are supplied in kits; use the same size as before in step 5.2.20.

5.2.7 Inspect the shear adapter (61). If significant corrosion and/or damage is present, remove the adjuster adapter using needle-nose pliers and replace with the adapter supplied in the kit and clean as necessary.

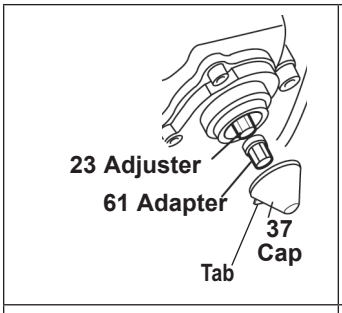

Figure 35 – Exploded View of Adjuster and Adapter

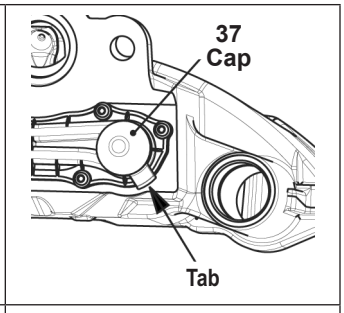

Figure 36 – Cap Installed: Tab Location

For illustration purposes, the exploded view (Figure 35) shows the adjuster (23) and shear adapter (61) separated. When using the adjuster mechanism, always have the shear adapter installed on the adjuster.

CAUTION: Never turn the adjuster (23) without the shear adapter (61) installed. The shear adapter is a safety feature and is designed to prevent too much torque being applied. The shear adapter will fail (by breaking) if too much torque is used.

Note: For wheel-ends with spring brakes, if a shear adapter fails, always double-check to verify that the spring brake has been released (or caged). If the spring brake is applied, release or cage the brake (ensure that the air system pressure is at least 90 psi) and start the procedure again.

If the shear adapter fails, you may attempt a second time with a new (unused) shear adapter. In cases where a second failure of the shear adapter confirms that the adjustment mechanism is seized, the caliper must be replaced.

5.2.8 Use a 10 mm., six-point box wrench *(See Figure 37)* to turn the adjuster counterclockwise until sufficient space exists to remove the brake pads. A clicking noise occurs each time the adjuster turns.

CAUTION! Avoid overloading or damaging the adjuster shaft. Do not use an open-ended wrench since it may damage the adjuster shaft.

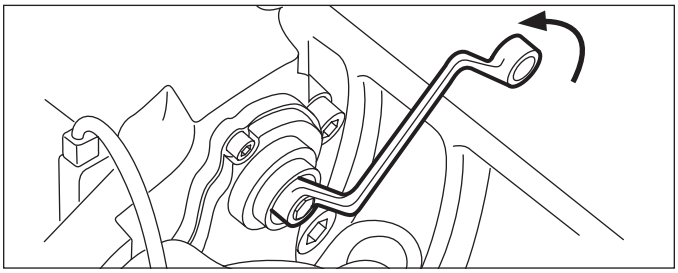

Figure 37 – Backing Off the Adjuster for Pad Removal

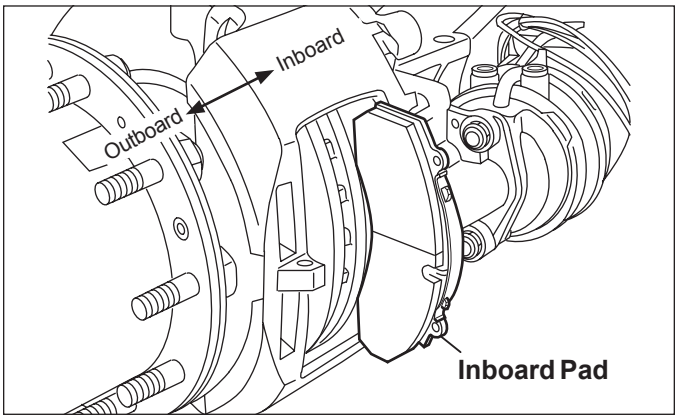

Figure 38 – Pad Removal

5.2.9 *See Figure 38.* Move the caliper fully inward and remove the inboard pad, then move the caliper fully outward and remove the outboard pad.

5.2.10 Repeat the pad removal procedure for the other end of the axle.

5.2.11 To confirm that the guide pins are sliding freely, examine the pads just removed for uneven wear.

Use these two inspections:

A. Check for uneven end-to-end pad wear. If the difference in wear is greater than 0.080 in. (2 mm.), replace the brake pads and also inspect the guide pins *(See Section 4.5)*.

B. Compare the thickness of the inboard and outboard pads of each set. If the difference between the inboard and outboard pad thickness is greater than 0.138 in. (3.5 mm.), replace the brake pads and inspect the guide pins *(See Section 4.5)*.

5.2.12 Inspect the brake rotor *(See Section 4.4).*

5.2.13 Inspect the guide pins *(See Section 4.5)*.

Important: To maintain optimal braking, Bendix strongly recommends that whenever brake pads are replaced, the complete axle set be replaced together. Use only pads which are permitted by the vehicle manufacturer, axle manufacturer, and/or disc brake manufacturer. Failure to comply with this may invalidate the vehicle manufacturer's warranty.

Before installing the brake pads, use the adjuster to fully retract the tappets to provide adequate clearance.

5.2.14 Clean the surfaces that will come in contact with the brake pad.

Caution: When installing pads and retaining springs, where appropriate, use heavy duty gloves and always keep fingers away from potential pinch hazard areas.

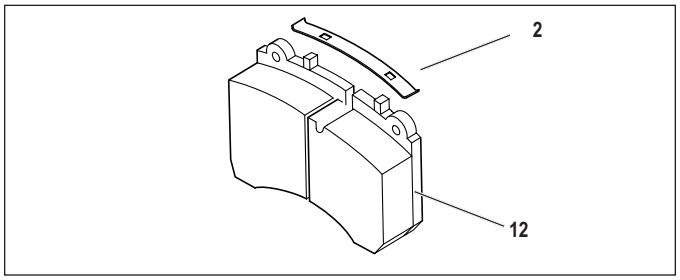

Figure 39 – Pad Retaining Spring Installation

5.2.15 Install the pad retaining springs(2) onto the brake pads(12) by inserting one end of the spring onto the lug at the top of the brake pad *(See Figure 39).* Carefully apply enough force to permit the second lug to fully engage, taking care to keep fingers etc. away from the spring as it seats.

5.2.16 Pull the caliper fully outward and install the outboard pad. Move the caliper fully inward and install the inboard pad.

5.2.17 To reinstall wear indicators (if used): Insert the wear sensors into position in the new brake pads. Route the sensor cable through the cable protection plate channel and secure the plate with the mounting hardware retained at disassembly. *(See Section 5.2.)*

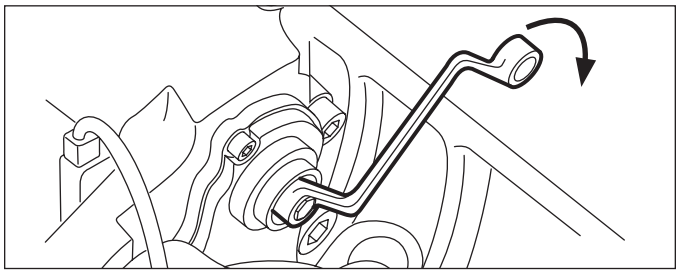

Figure 40 – Running Clearance Adjustment

5.2.18 Using a 10 mm., six-point box wrench, turn the Shear Adapter (61) **clockwise** until the pads contact the rotor. Note: Do not use an open-ended wrench as this may damage the adapter. *(See Figure 40)*.

5.2.19 Using the same tool, turn the Shear Adapter (61) **counterclockwise** and listen for the sound of 3 clicks as the mechanism backs-off (increases) the running clearance. *(See Figure 37).*

5.2.20 Select the correct replacement adjuster cap from those supplied with the kit. Lightly grease adjuster cap with Renolit HLT2 white grease (part number II14525) and install the cap.

5.2.21 Push the new pad retainer bar (11) into the groove of the caliper. Press down on the pad retainer bar, and insert the pad retainer pin (44), with the pin pointing downwards, where possible. Install the supplied washer (45) and then the spring clip (26). *(See Figure 34).*

5.2.22 Apply and release the brakes. The hub should turn easily by hand after applying and releasing the brake.

5.2.23 Recheck the running clearance. Readjust if necessary.

5.2.24 Reinstall the wheel, following the vehicle manual instructions.

⚠ WARNING

The brake pads and rotor must be maintained within the recommended wear limits. Failure to monitor wear and replace the brake pads and rotor when required may result in diminished brake performance.

5.3 CALIPER/CARRIER/ACTUATOR ASSEMBLY

CAUTION: Follow all safe maintenance practices, including those listed on page 2 of this document. Park the vehicle (by other means than the foundation brakes) on level ground and chock the wheels.

CAUTION: When using a hoist to support the air disc brake, do not attempt to use the pad retainer bar as a bracing point. It is not designed to support the weight of the brake. Use instead a brace (or chain) wrapped around the entire brake to attach the hoist.

5.3.1 In all cases check that the current hose routing arrangement does not restrict the full travel of the caliper before beginning work on the assembly.

5.3.2 Remove the brake pads (*See Section 5.2*)**.**

5.3.3 *(See Section 5.4)***.** If the actuator used is a spring brake, following the manufacturer's guidelines, cage the spring. With all air pressure drained from the system, disconnect the air hoses from the brake chamber.

Vertical Mounting Bolt Style

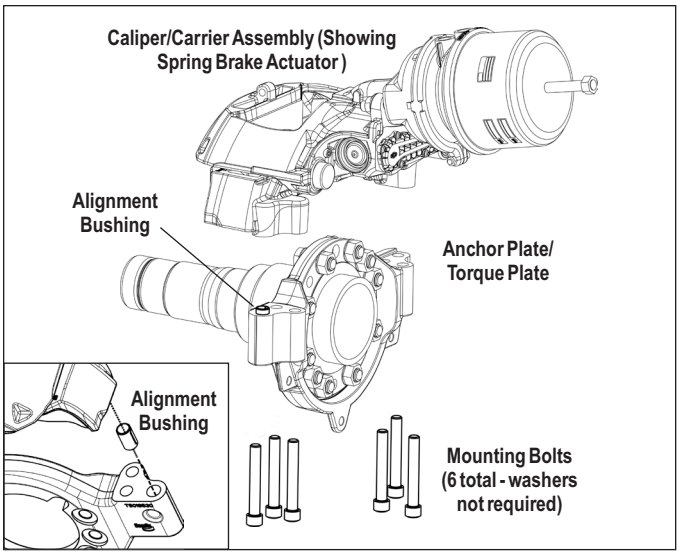

Figure 41 – Vertical Mount Caliper/Carrier

5.3.4 *See Figure 41.* Supporting the air disc brake by necessary means, remove the six (6) mounting bolts/washers and discard. Note: Bendix strongly recommends that during reassembly these bolts are replaced – see your vehicle manufacturer for replacement hardware. Lift the caliper up off the anchor plate.

The vertical bolt assembly includes an alignment bushing. **This bushing must be saved for reuse during reassembly of the brake.** The bushing mounts in the torque plate and maintains the correct alignment of the brake assembly relative to the rotor.

5.3.5 If the brake assembly does not separate from the anchor plate it may be helpful to install an M16 X 2.0 screw longer than 120 mm at the bushing locations and tap the end of the bolt with a hammer to free the brake assembly. Remove the assembly.

Axial Mounting Bolt Style

5.3.6 Disconnect the air hose(s) to the brake chamber. *See Figure 42.* Supporting the air disc brake by necessary means, remove the six bolts attaching the brake to the anchor plate and remove the caliper/carrier assembly from the vehicle.

Note: Bendix strongly recommends that during reassembly these bolts and washers are replaced. See your vehicle manufacturer for replacement hardware. Remove the assembly.

Reinstallation (Both Styles)

5.3.7 Supporting the air disc brake by necessary means, attach the brake to the anchor plate using six (new) bolts. Torque to vehicle manufacturer's specifications. If torque values and bolts are not specified by the vehicle manufacturer, then select a replacement bolt as shown in Table 4.

5.3.8 Reinstall the air hoses *(See Section 5.4.8-9) and check for leaks*.

5.3.9 Inspect and reinstall the pads *(See Section 5.2)*.

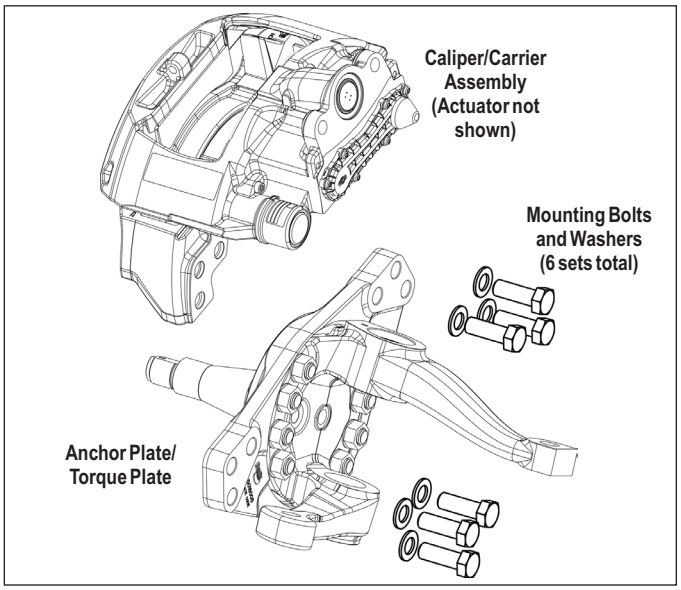

Figure 42 – Axial Mount Caliper/Carrier

Air Disc Brake Attachment Hardware

Vertical Mount	Fastener & Torque
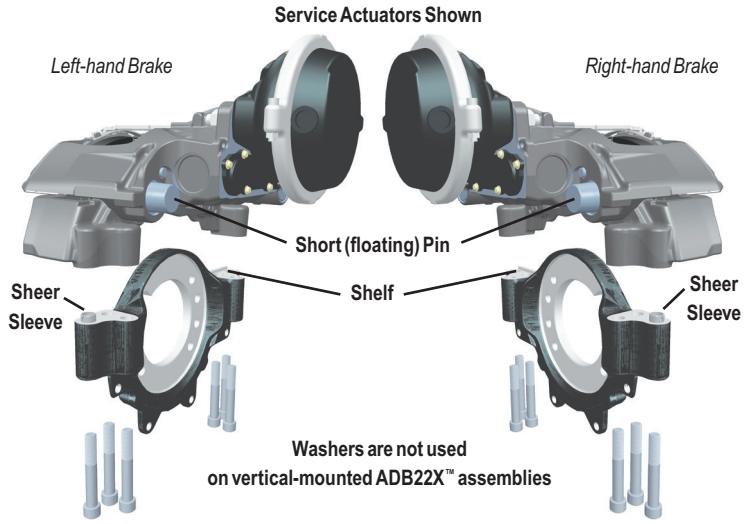	**Fastener:** M16 x 2.0 x 110 mm, Class 10.9. Use the manufacturer's recommendations, but if unavailable, use a plain and oil-finish fastener. ***Bendix strongly recommends using new fasteners each time.*** **Washer:** None used. **Torque:** *Using the torque pattern below,* pre-torque to between 40-50 ft-lbf [54-68 N·m], with a final torque 180-200 ft-lbf [244-271 N·m]

Left-Hand Brake Torque Pattern (*Viewed from Below*)	Right-Hand Brake Torque Pattern (*Viewed from Below*)
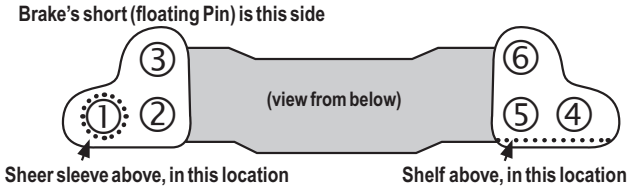	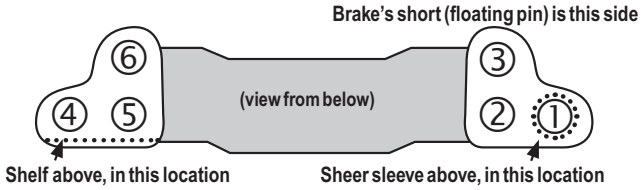

Axial Mount	Fastener & Torque
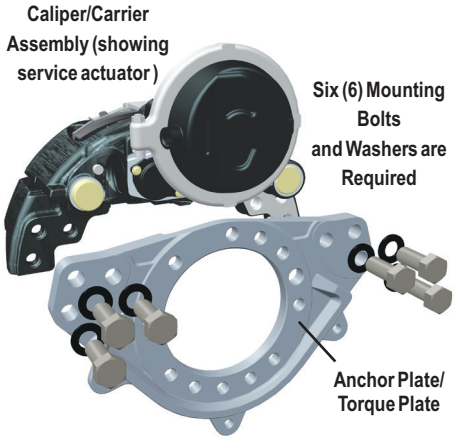	**Fastener:** M20 x 2.5 x 60 mm Class 10.9. Use the manufacturer's recommendations, but if unavailable, use a phosphate and oil-finish fastener. ***Bendix strongly recommends using new fasteners each time.*** **Washer:** Requires a HARDENED 3 mm (minimum thickness) washer for each bolt. If the vehicle is using a Bendix manufactured axial anchor plate, with a thickness of 1.14 in. (29 mm) at the point where these bolts are inserted, then a bolt with an overall length of 2.36 in. (60 mm) will meet the requirements. CAUTION: The washer outside diameter must be less than 1.5 in (37.5 mm). **Torque:** Pre-torque to 20-60 ft-lbf [27-81 N·m], with a final torque of 350-400 ft-lbf [475-542 N·m] **Torque Pattern** *Any cross-pattern, see the example below:* 1 5 6 4 3 2

Trailer Torque Plate	Fastener & Torque
Fastener: M20 x 2.5 x L Class 10.9 Length determination: L = Torque Plate (TP) thickness + Carrier engagement + Washer thickness L_{min} = TP thickness + 24 mm + 3 mm L_{max} = TP thickness + 29 mm + 3 mm	Use the manufacturer's recommendations. If unavailable, use phosphate and oil finish fastener: Pre-Torque: 20-60 ft-lbf [27-81 N·m] Final Torque: 350-400 ft-lbf [475-542 N·m]
Washer: Requires THROUGH HARDENED 3 mm (minimum thickness) for each bolt.[1]	

Table 4 – Torque Plate Fasteners and Torque Recommendations (see manufacturer's recommendations)

5.4 SPRING OR SERVICE BRAKE

5.4.1 **CAUTION: Follow all safe maintenance practices, including those listed on page 2 of this document. Park the vehicle (by other means than the foundation brakes) on level ground and chock the wheels.**

5.4.2 **Use the spring brake manufacturer's recommended safety practices in all cases.**

Some spring brake and vehicle manufacturers permit caging the spring brake while the spring brake is engaged.

THE FOLLOWING INSTRUCTIONS ARE FOR BENDIX® BRAND PISTON-STYLE ACTUATORS.

5.4.3 With the vehicle on a level surface and the wheels properly chocked, apply air to release the spring brakes (parking brakes) by using the dash-mounted air control valve. Back out the release bolt (*See Figure 43, arrow "D"*), using a maximum torque of 26 ft-lbs (35 Nm) to cage the air released spring force on the pushrod.

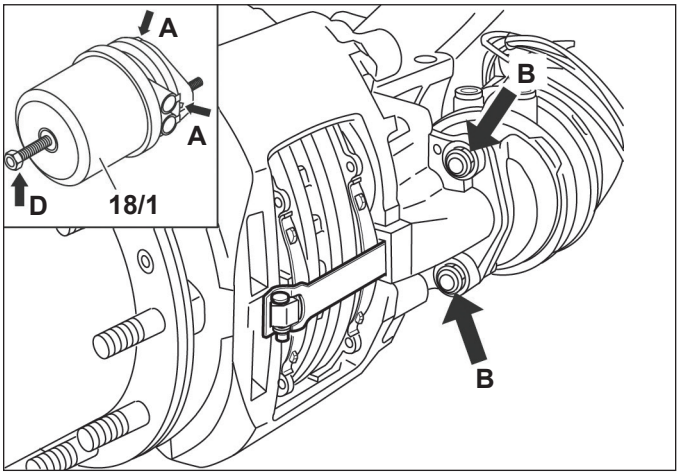

Figure 43 – Actuator Spring Caging and Removal

5.4.4 Exhaust the air from the brake chambers by using the dash-mounted air control valve. With all air pressure drained from the system, disconnect the air hoses from the brake chamber. While supporting the brake chamber in position, remove and discard the brake chamber mounting nuts (*See Figure 45, arrows marked "B"*). Remove the brake chamber.

5.4.5 Reinstallation. Before installing the brake chamber, the actuator flange *(See Figure 46, arrow "C")* must be cleaned and inspected. Consult the vehicle manual. The spherical cup in the lever (19) must be greased with white grease (Part No. II14525 or K021964). Add grease to the rubber gasket on the chamber.

CAUTION: Do not use grease containing molybdenum disulfate.

5.4.6 The seal, as well as the pushrod area, must be clean and dry.

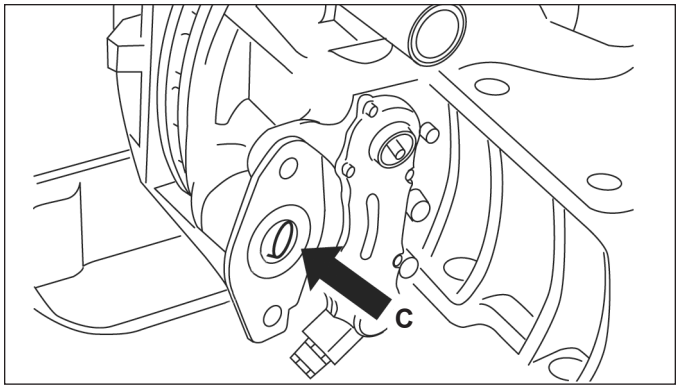

Figure 44 – Spring Brake Installation

CAUTION: Do not use brake chambers with seals that have a thickness less than 0.12 in. (3 mm). Use only actuators which are recommended by the vehicle manufacturer.

5.4.7 Install the brake chamber using new self-locking nuts (EN ISO 10513). Alternately tighten both the nuts step-by-step up to a final torque of 133 ± 7 ft-lbs (180 ± 10 Nm). **Bendix strongly recommends that new nuts be used.**

5.4.8 Reconnect the air hose(s) and be sure that each hose is not twisted or in contact with moving vehicle components. The air hose routing must allow for full caliper travel. Note that for spring brake service chambers the ports are indicated by: "11" Service Brake Port and "12" Spring Brake Port

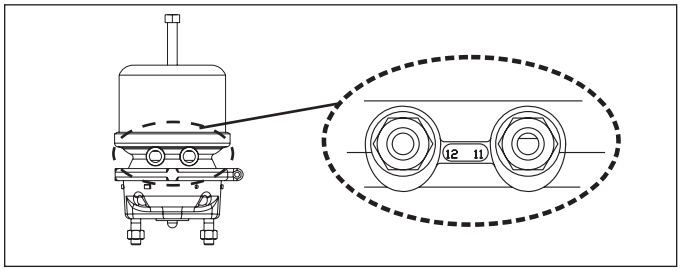

Figure 45 – Port Designations

Note: Where a new spring brake chamber is being installed, note that in some cases drain plugs are installed *(See Figure 43, arrows marked "A").* Where drain plugs are present, after installation, remove whichever plug is at the lowest position. The selected drain hole must be aligned downwards (or within ±30°) when installed on the vehicle. In the case of spring brake chambers, install the pads before uncaging the spring.

5.4.9 Before returning vehicle to service, with the system pressurized, using a soap solution, check for air leakage. Minimal leakage in the area around the diaphragm is permitted (100 SCCM), and a one-inch bubble in one minute at the hose fitting is acceptable. If abnormal leakage is detected, the diaphragm must be replaced, or fitting adjusted, respectively.

5.5 TAPPET & BOOT ASSEMBLIES, AND TAPPET INNER SEAL REPLACEMENT

5.5.1 **CAUTION: Follow all safe maintenance practices, including those listed on page 2 of this document. Park the vehicle (by other means than the foundation brakes) on level ground and chock the wheels.**

In some cases, the technician will need to remove the caliper carrier assembly from the vehicle. *(See Section 5.3.)* Note that new bolts (available from the vehicle manufacturer) will be needed for reinstallation.

Important: If the vehicle is equipped with spring brakes, cage the spring brakes on all axles requiring work. Consult the vehicle manufacturer's instructions as necessary. This procedure may be carried out with the air disc brake installed on, or removed from, the vehicle. In cases where the caliper/carrier assembly is removed from the vehicle, NEW fasteners must be used and properly torqued during reinstallation. Use only fasteners approved by the vehicle manufacturer.

Note: This maintenance procedure uses specialized tools. The full Bendix® air disc brake tool kit (K029164), or Ken-Tool® kit (80000), includes the complete set of tools required for all permitted maintenance procedures. Alternately, for locations where only the tappet and boot replacement procedures will be performed, the smaller Bendix tool kit (K028829), or Ken-Tool kit (80001) will suffice. The Bendix DVD (BW7356) shows this procedure.

Bendix Number/ Ken-Tool Number	Description	Typical Tool View
T1 / KT01	Cup	
T2 / KT02	Handle for KT01 cup	
T3 / KT03	Swivel assembly (KT03-1 short body + KT03-2 brass disc + KT03-3 retaining spring)	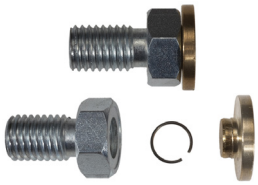
T4 / KT04	Long strut	
T9 / KT09	Flange	
T15 / KT015	Fork	
T24 / KT024	Black Nylon Disc	

Table 5 – Tappet and Boot Replacement Tools

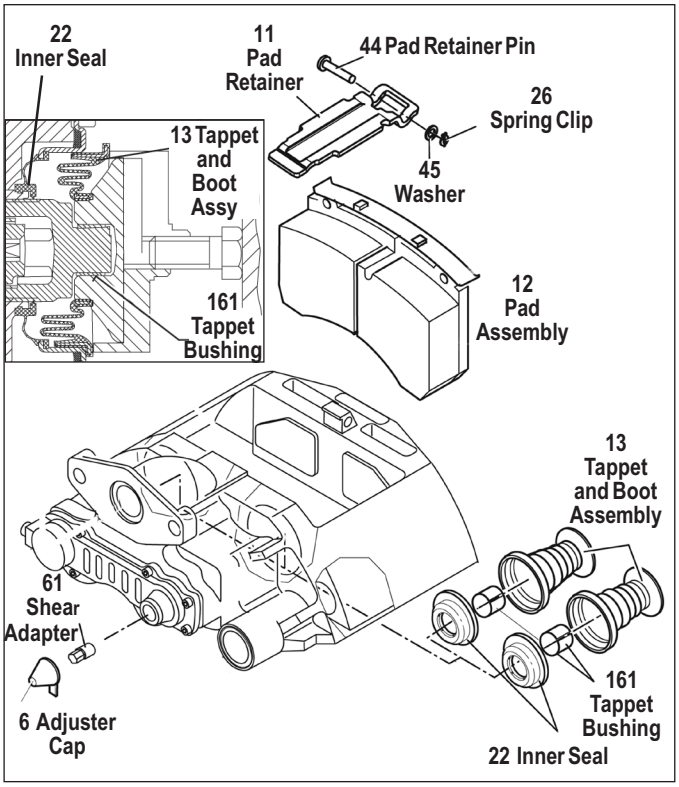

Figure 46 – ADB Exploded and Section Views

5.5.2 Pad Removal: *follow Sections 5.2.1-5.2.11 for removal of the brake pads*.

5.5.3 Inspect the Brake Rotor *(See Section 4.4).*

Tappet and Boot Assembly (13) Removal

CAUTION: NEVER EXTEND THE TAPPET MORE THAN 1.75 in. (44.5 mm). *See Figure 47.* Over-extending the tappet will result in the tappet losing engagement with the threads of the synchronizing mechanism. Since the mechanism can only be set at the manufacturing plant, the *caliper/carrier assembly must be replaced* if this happens.

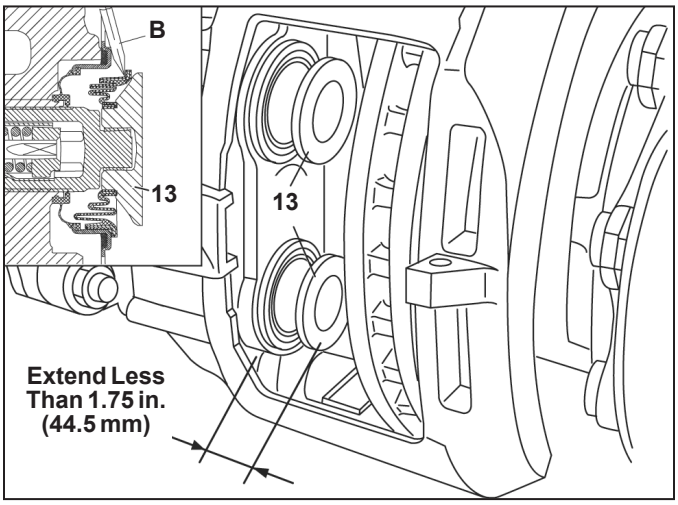

Figure 47 – Permitted Tappet Extension

5.5.4 *See Figure 47*. Extend the tappets – less than 1.75 in. (44.5 mm) – by turning the shear adapter (61) clockwise. A screwdriver (*callout "B" in Figure 47 inset*) should be used to move the boot and allow the wedge fork (*"A" in Figure 48*) to be inserted.

CAUTION: Do not insert the screw driver more than ¼ inch. Take care not to damage the inner sealing face (*see arrow "X" in Figure 48*). Gouges or grooves will prevent a good seal and will require that the caliper be replaced.

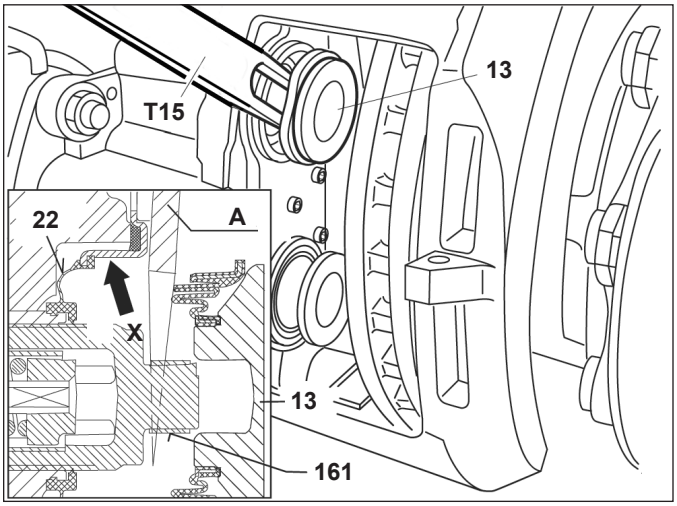

Figure 48 – Wedge Tool Use

5.5.5 The tappet and boot assemblies (13) can then be removed from the threaded tubes (16) by using the wedge fork (T15). *Be sure to orient the wedge tool with the tapered side towards the tappet.*

5.5.6 Remove the old tappet bushings (161).

5.5.7 Retract the threaded tubes by turning the shear adapter (61) counterclockwise.

5.5.8 *See Figure 49.* Carefully remove the inner seal using one or two flat-blade screwdrivers as shown. Caution: Do not insert the screwdrivers so far that they come into contact with the threaded tubes. Damage to the threaded tubes would require that the brake be replaced.

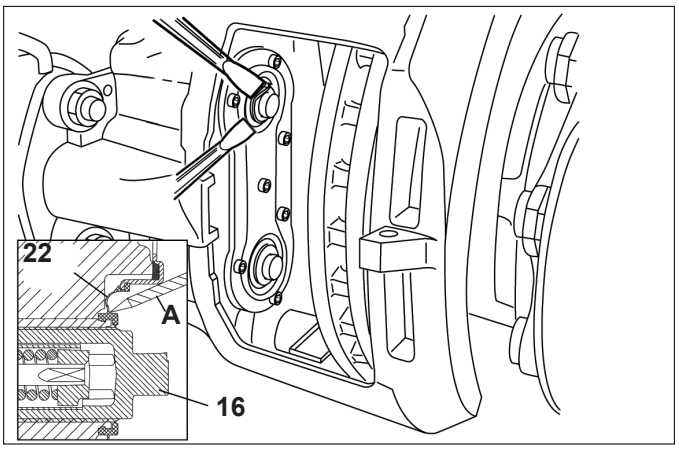

Figure 49 – Inner Seal Removal

5.5.9 Inspect the inner sealing face for damage. If damage is found that would cause the inner seals not to be able to seal properly, the caliper/carrier assembly must be replaced. Clean the area around the inner seal.

5.5.10 Inspect the threaded tubes (16). *See Figures 50 and 51*. Extend the tubes, but by less than 1.75 in. (44.5 mm), by turning the shear adapter (61) clockwise. Inspect the threads for rust, corrosion, or damage etc. If there is evidence of damage to the threads, significant rust, or corrosion, the caliper/carrier assembly must be replaced.

If the technician is working with the caliper on the vehicle, the technician may place a new brake pad (12) into the outboard gap to help avoid the loss of thread engagement of the threaded tubes. *See Figure 50.*

If the work is being carried out at a workbench, the technician may insert a 2.76 in. (70 mm) spacer *(See callout "E" in Figure 51)* into the caliper (1) to help avoid the loss of thread engagement.

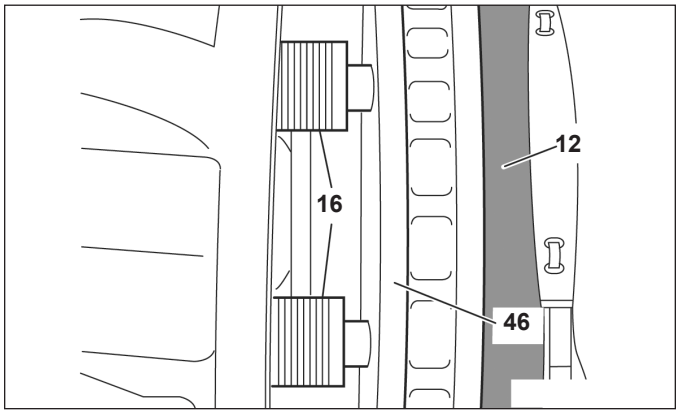

Figure 50 – Use of a New Brake Pad as a Spacer

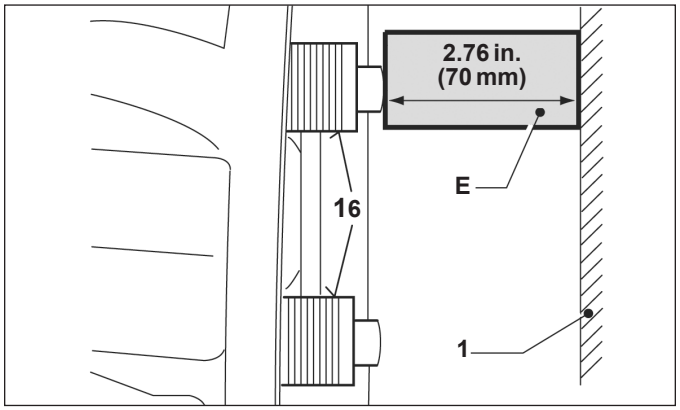

Figure 51 – Use of a Spacer (off-vehicle inspection)

5.5.11 For threads that are in good condition, grease the threads with white grease (Part No. II14525 or K021964). Before installing the replacement inner seals (22), retract the threaded tubes by turning the shear adapter (61) counterclockwise.

Note: If the shear adapter fails while you are retracting the threaded tubes, you may try again with another (new) shear adapter. If this also fails, this indicates that the adjuster mechanism is damaged and the caliper must be replaced.

To install inner seals where the caliper is on the vehicle:

5.5.12 Position the replacement inner seal (22) over the threaded tube (16). *See Figures 52 and 53 for the tools and installation arrangement used.* Position the L1 (T3 + T9) with the short spacer (T3) in position as shown in Figure 53. Guide the tool over the end of the threaded tube (16). Install the new inner seal (22) into position by rotating the adjuster nut on the T3 portion of the tool, using an open-ended wrench.

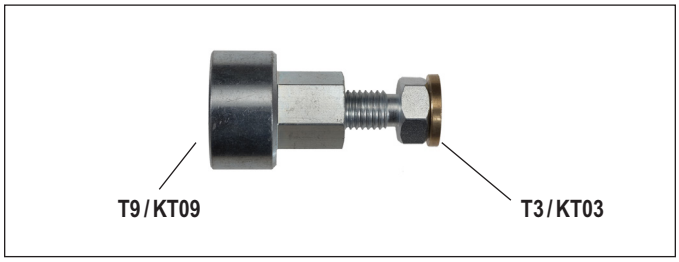

Figure 52 – On-Vehicle Inner Seal Tool (L1)

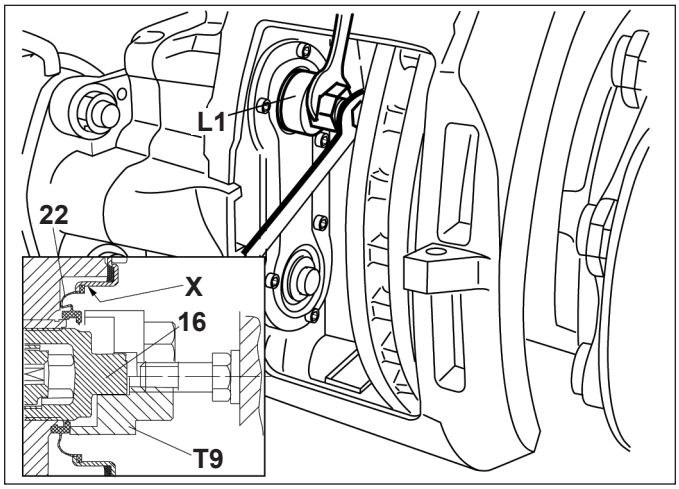

Figure 53 – On-Vehicle Inner Seal Installation

To install inner seals where the caliper has been removed from the vehicle:

5.5.13 Position the replacement inner seal (22) over the threaded tube (16). *See Figures 54 and 55 for the tools and installation arrangement used.* The threaded tubes need to be retracted to allow the tool to be inserted. *Use the combination tool L2 (T4 + T3 + T9) with the long spacer (T4) as shown in Figure 55.* Since the installation tool is guided by the center post of the threaded tube, advance the tube a small amount to align the tool and the center post. Install the new inner seal (22) into position by rotating the adjuster nut on the T4 portion of the tool using an open-ended wrench.

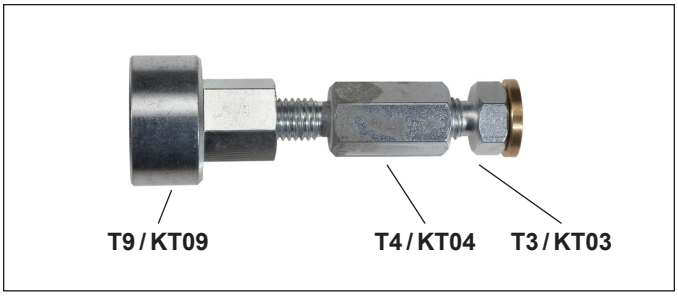

Figure 54 – On-Vehicle Inner Seal Installation Tool (L2)

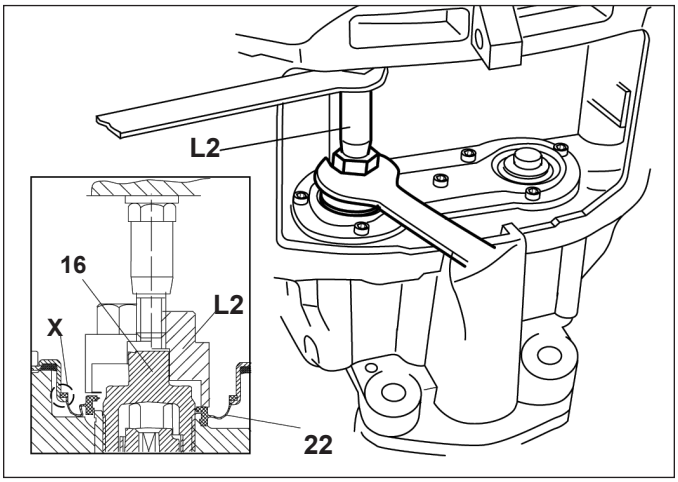

Figure 55 – Off-Vehicle Inner Seal Installation

CAUTION: To confirm that the inner seal has been correctly installed, begin to extend the threaded tubes (16) by turning the shear adapter clockwise by 4-5 turns. Watch as the threaded tube extends. Inner seals that are installed correctly WILL NOT ROTATE as the threaded tube extends.

5.5.14 Note: Inspect the tappet/boot kit to determine if the tappets supplied are already pre-greased (a plastic cover should be present — be sure to remove the cover when installing the tappet). Only in the case of kits that are not pre-greased will the installer need to apply grease to the tappets. In all cases, the threaded portion of the tubes will need to be greased. Retract the threaded tubes.

5.5.15 Install the new tappet bushing (161) onto the center post of each threaded tube (16) by hand. By hand, ease the tappet bushings onto the center post of the threaded tubes and they will snap into position.

5.5.16 The sealing seat in the caliper for tappet and boot assemblies (13) must be clean and free of grease. Wipe the opening with a clean shop rag. Place a tappet and boot assembly (13) in position over the center post and tappet bushing.

To install tappet and boot assemblies where the caliper is on the vehicle:

5.5.17 *See Figures 56, 57, and 58.* Use tool B1, comprising tools T1, T2, and T3 to press the boot into position. The tool is then reversed, and the nylon disc (T24)

is inserted into the T1 “cup” (combination tool ‘B2’). Holding the T1 handle, turn the nut on the T3 tool to fully install the tappet onto the tappet bushing (161).

Figure 56 – On-Vehicle Tappet and Boot Installation Tool (B1 - with T24 Installed, B2)

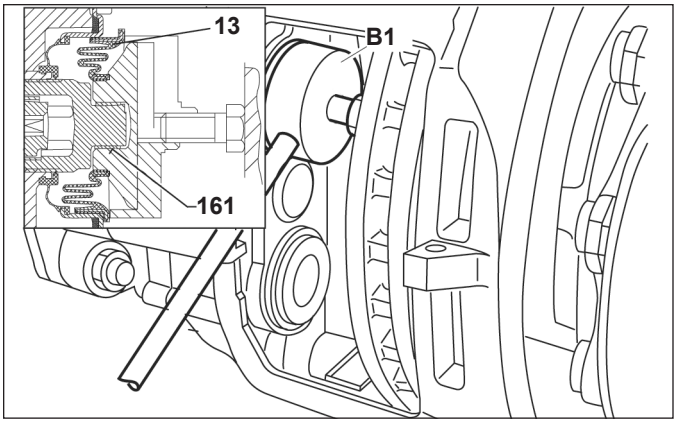

Figure 57 – On-Vehicle Tappet Boot Installation

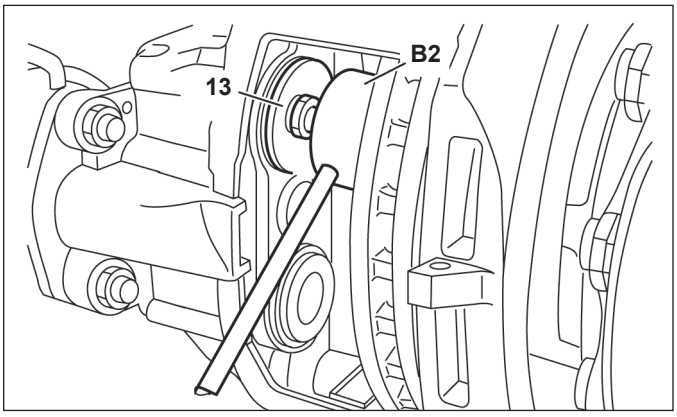

Figure 58 – On-Vehicle Tappet Installation

To install tappet and boot assemblies where the caliper is removed from the vehicle:

5.5.18 *See Figures 59, 60, and 61.* Retract the tappets, as needed, in order to have room to install the tappets. Use tool B3, comprising tools T1, T2, and T3 to press the boot into position. The tool is then reversed, and the nylon disc (T24) is inserted into the T1 “cup” (combination tool ‘B4’). Holding the T1 handle, turn the nut on the T3 tool to fully seat the tappet onto the tappet bushing (161).

Figure 59 – Off-Vehicle Tappet Boot Installation Tool (B3, with T24 Installed, B4)

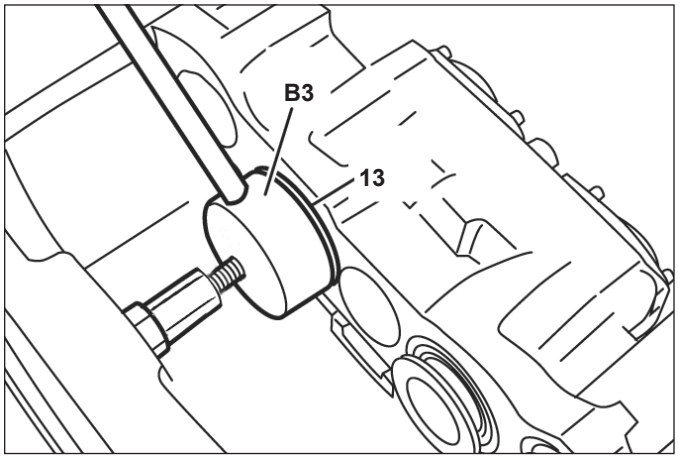

Figure 60 – Off-Vehicle Tappet Boot Installation

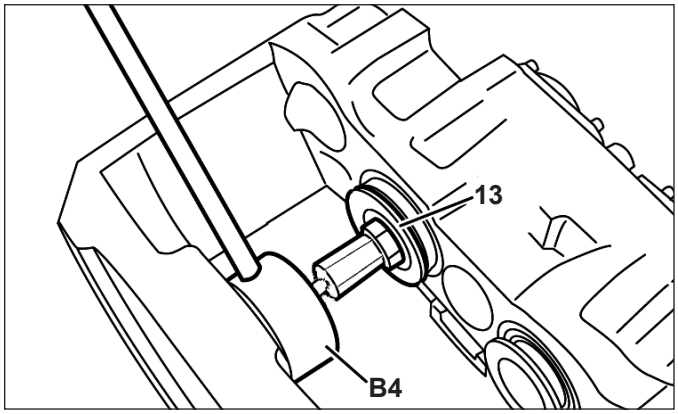

Figure 61 – Off-Vehicle Tappet Installation

5.5.19 Check that the tappets are firmly attached to the bushings by gripping and pulling lightly on them by hand. Confirm that the tappets are able to rotate a small amount on the tappet bushings by grasping and turning them by hand. Finally, using a box-end wrench on the shear adapter, extend the threaded tubes outward, and check that the boots are held in place. Retract the tappets.

5.5.20 Reinstall the caliper/carrier assembly, if it was removed from the vehicle *(See Section 5.3)*.

5.5.21 Reinstall the brake pads *(See Section 5.2).*

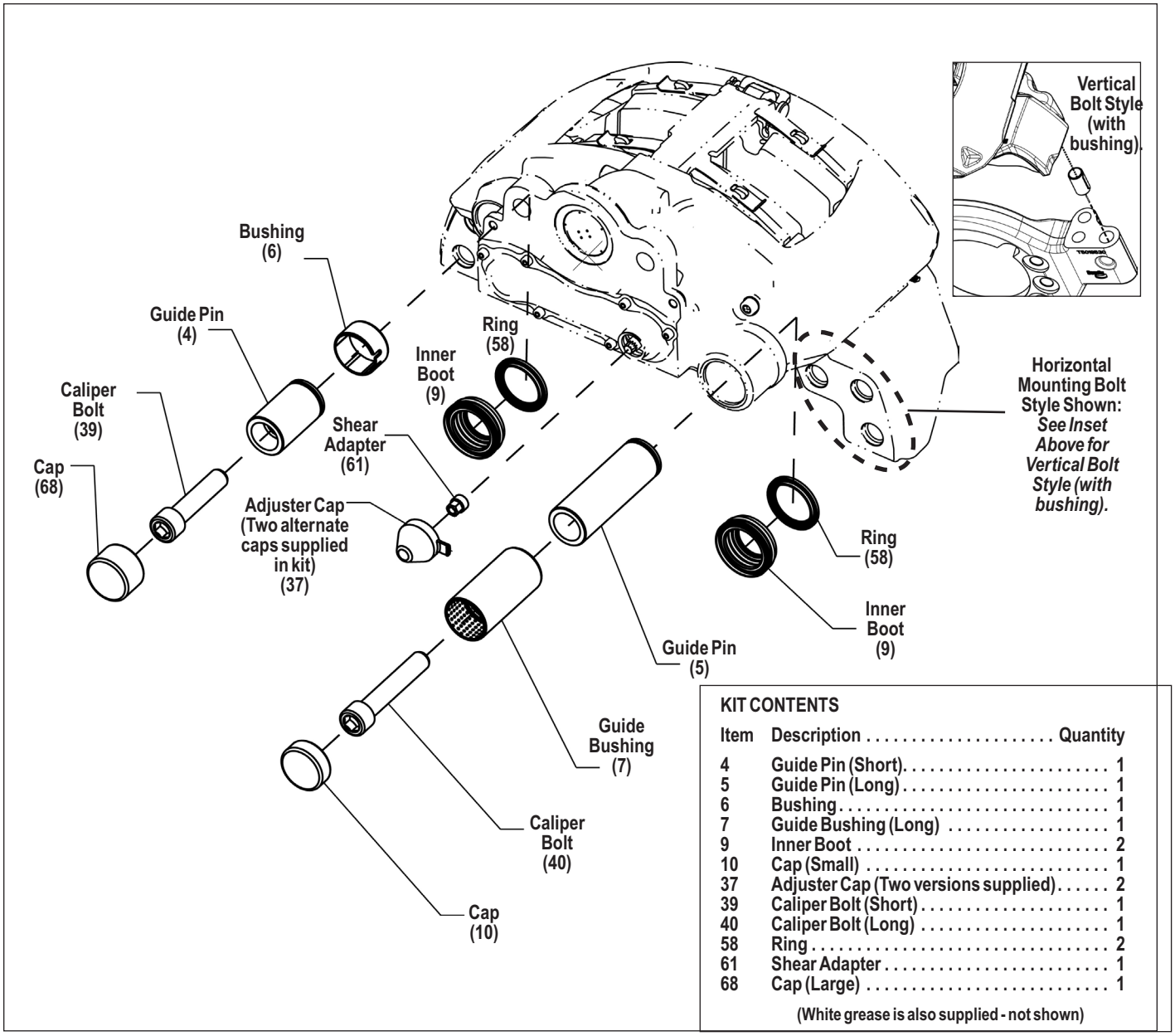

KIT CONTENTS

Item	Description	Quantity
4	Guide Pin (Short)	1
5	Guide Pin (Long)	1
6	Bushing	1
7	Guide Bushing (Long)	1
9	Inner Boot	2
10	Cap (Small)	1
37	Adjuster Cap (Two versions supplied)	2
39	Caliper Bolt (Short)	1
40	Caliper Bolt (Long)	1
58	Ring	2
61	Shear Adapter	1
68	Cap (Large)	1

(White grease is also supplied - not shown)

Figure 62 – Guide Pin Exploded View

5.6 GUIDE PIN AND BOOT ASSEMBLIES

The Bendix DVD (BW7356) shows this procedure.

5.6.1 **CAUTION: Follow all safe maintenance practices, including those listed on page two of this document. Park the vehicle (by other means than the foundation brakes) on level ground and chock the wheels.**

Important: If the vehicle is equipped with spring brakes, cage the spring brakes on all axles to be worked on. Consult the vehicle manufacturer's instructions as necessary. *For Bendix® brand piston-style spring brake chambers, see Section 5.4.*

These procedures are typically carried out with the caliper/carrier removed from the vehicle (may be carried out with the air disc brake installed). In cases where the caliper/carrier assembly is removed from the vehicle, NEW fasteners must be used and properly torqued during reinstallation. Use only fasteners approved by the vehicle manufacturer.

Note: This maintenance procedure uses specialized tools. The full Bendix® air disc brake tool kit (K029164), or Ken-Tool® kit (80000), includes the tools needed for the guide pin and boot installation. *See Table 6.*

Note that a smaller Bendix tool kit (K029107), or Ken-Tool kit (80002) may be used where only the guide pins will be serviced.

Bendix Number/ Ken-Tool Number	Description	Typical Tool View	Bendix Number/ Ken-Tool Number	Description	Typical Tool View
T05 / KT05	1-3/8 in. diameter disc		T14 / KT14	Brass nut	
T06 / KT06	1-1/2 in. diameter disc		T16 / KT16	Dimpling tool	
T07 / KT07	2 in. diameter sleeve		T20 / KT20	8 in. bolt	
T08 / KT08	2-1/8 in. diameter disc		T21 / KT21	Half sleeve	
T10 / KT10	8 in. bolt		T26 / KT26	Cap installation tool	
T12 / KT12	3-7/8 in. long sleeve		T27 / KT27	Cap installation tool	
T13 / KT13	10 in. bolt				

Table 6 – Bendix® ADB22X™, ADB22X-V™ and ADB22X™-LT Air Disc Brake Guide Pin and Seals Replacement Tools (a washer is also included)

5.6.2 Remove the wheel. Refer to the vehicle manufacturer's recommendations.

5.6.3 Remove the brake pads. *See Section 5.2.*

5.6.4 In most cases, the actuator should be removed. *See Section 5.4.* In the case of spring brake actuators, they should be caged before removing the brake assembly.

5.6.5 In nearly all cases, the air disc brake caliper/carrier will need to be removed from the vehicle in order to complete this procedure. *See Section 5.3.*

5.6.6 Place the brake on a workbench and, using a vice, secure it by the carrier.

5.6.7 Use a small chisel or similar tool to punch a hole close to the center of the guide pin cap (10) **of the short guide pin,** taking care to only insert the chisel a small amount. Using the hole just made, pry the cap off and discard. *See Figures 63-65.*

Figure 63 – Punch Guide Pin Cap (10)

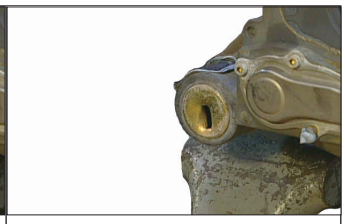

Figure 64 – Guide Pin Cap (10) Hole

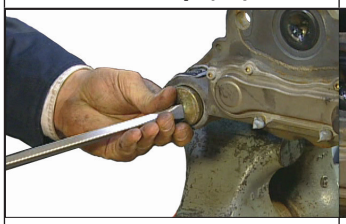

Figure 65 – Pry to Remove Guide Pin Cap (10)

Figure 66 – Use a Small Chisel to Remove the Guide Pin Cap (68)

5.6.8 Remove the other cap (68) **that covers the long guide pin**, by using a small chisel and hammer to apply light blows to the cap, with the chisel aimed away from the casting. *See Figure 66.* Discard both caps.

5.6.9 Using a 14 mm hex bit socket, remove and discard the two caliper bolts (39) and (40). *See Figure 67.* By hand, retract both guide pins slightly, and then remove the caliper from the carrier.

Figure 67 – Remove the Caliper Bolts

The guide pins are now only held by the retaining rings (58).

5.6.10 Remove the boot retaining rings (58) and the guide pins (39) and (40). Use a screwdriver to pry out the inner boots (9). *See Figure 68.* Discard the removed items.

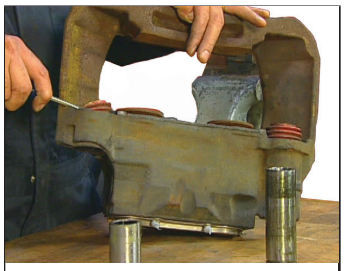

Figure 68 – Remove the Retaining Rings, Guide Pins, and Boots

5.6.11 Clean the caliper upper and lower surfaces around the bushings.

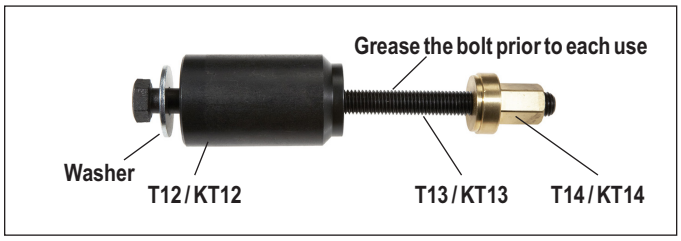

Figure 69 – Brass Bushing Removal Tool

5.6.12 Prepare to remove the brass bushing used in the long guide pin side. Assemble the long bolt (T13), washer, and sleeve (T12) as in Figures 69 and 70.

5.6.13 Apply grease to the bolt and – after inserting through the guide pin channel – engage the brass nut (T14). Always double-check that the brass nut is correctly in place in the bushing before beginning to extract the bushing.

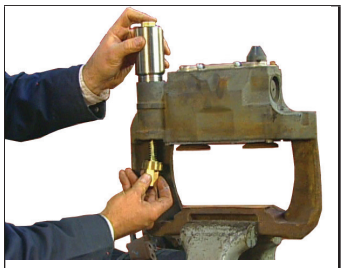

Figure 70 – Install the Removal Tool

5.6.14 Turning the bolt at the top, draw the brass nut up, bring the brass bushing up and out of the channel. Discard the bushing.

Figure 71 – Remove the Long Guide Pin

Caution: Keep the removal tool exactly aligned with the guide pin channel to permit the bushing to be removed. ***See Figure 72.***

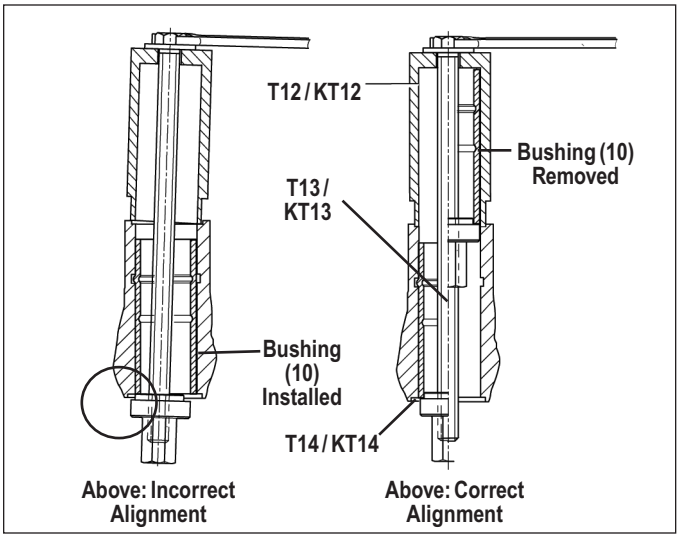

Figure 72 – Keep the Correct Alignment

5.6.15 Prepare to remove the short guide pin bushing by locating the bushing (6) tab, and using a small chisel (narrower than the tab) or similar tool, remove the tab as shown in Figure 73, by striking low on the base of the tab.

Figure 73 – Remove the Tab that Holds the Bushing in Position

Remove the tab with a magnet and use a clean shop cloth to remove any excess debris. Note that in some cases, the tab may be in the opposite (outer) slot in the bore.

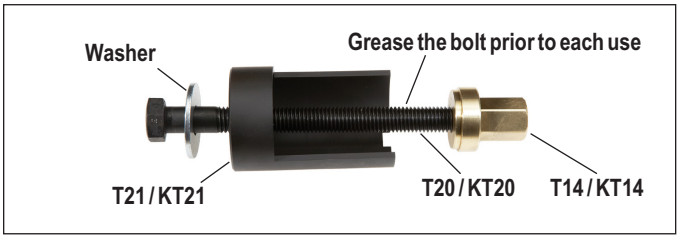

Figure 74 – Short Guide Pin Removal Tool

5.6.16 *Use the tool combination shown in Figures 74 and 75* (comprising T14, T20, T21, and a washer) to remove the bushing (6). Screw nut (T14) onto the assembly by hand, then tighten the bolt (T20) using a box end wrench to draw out the bushing. Discard the removed bushing, and verify that the bore is clean by wiping with a shop cloth.

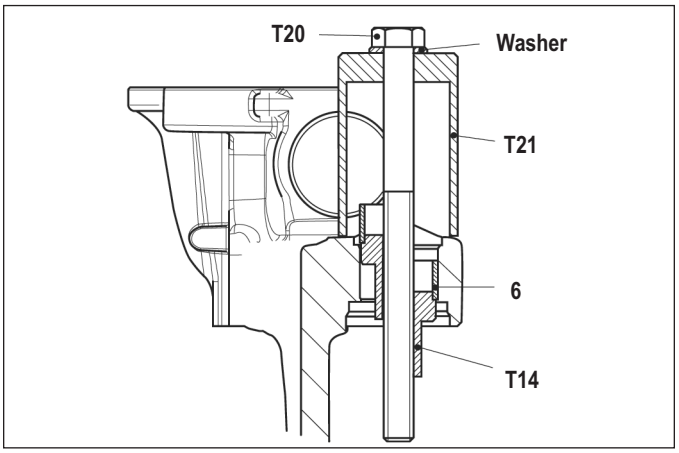

Figure 75 – Sectional View: Short Guide Pin Bushing Removal

Installation of the Fixed Guide Pin Brass Bushing

5.6.17 Clean the caliper upper and lower surfaces around the bushings.

5.6.18 Clamp the carrier in a vise so that the guide channel is vertically oriented.

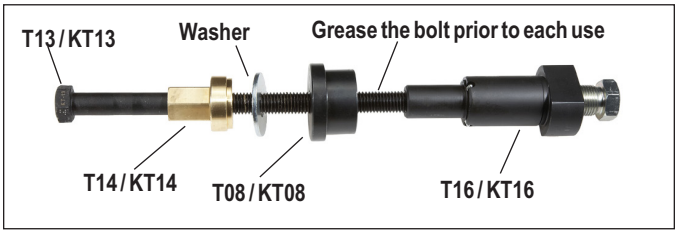

Figure 76 – Long Guide Pin Bushing Installation and Dimpling Tool

5.6.19 Place the washer and thread the brass nut (T14) on to the bolt (T13) followed by the flange (T08). *See Figure 76.*

5.6.20 Place a new brass guide bushing (7) on the dimpling tool (T16) and insert it into the caliper bore.

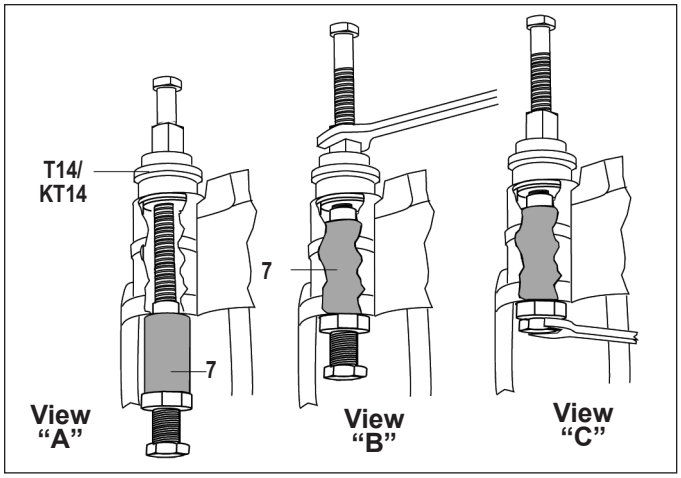

Figure 77 – View "A" and "B": Draw the Brass Bushing into Position. View "C": Lock the Bushing into Position

5.6.21 Check that the flange (T08) is in an upright position at the top of the caliper recess as you draw the brass bushing (7) up, by turning the brass nut (T14), until the dimpling tool bottoms on the caliper. When it reaches the correct position, the brass bushing extends out of the guide pin channel 0.039 in. (1 mm.).

5.6.22 With the dimpling tool (T16) in position, tighten the screw in its base until it contacts the dimpling screw housing. The movement of this screw forces three points outwards, leaving indentations in the brass bushing. *See Figure 77, view "C".*

5.6.23 Unscrew the dimpling screw out approximately 0.75 inches (20 mm.). Loosen the brass nut (T14) and rotate the dimpling tool (T16) 60 degrees. Repeat the dimpling process by tightening the brass nut (T14) and then tighten the dimpling screw until it contacts the dimpling screw housing. Back out the dimpling screw approximately 0.75 inches (20 mm.). The brass bushing (7) is now held in position by the six dimples made by the tool.

5.6.24 Remove the installation tools and check the brass bushing (7), removing any burrs, being careful not to leave any metal filings in the bushing. Coat the inside of the bushing with the white grease included in the kit.

Installation of the Floating Guide Pin Bushing

5.6.25 To install the bushing (6) into the short guide pin side, first inspect the bore for corrosion, damage etc. Clean as necessary.

5.6.26 Place the new bushing (6) in position so that **when drawn into position, the tab will align with the slot in the casting**. With the tab aligned, place tool (T14) over the bushing and tap lightly. To position the bushing, *see Figure 78.*

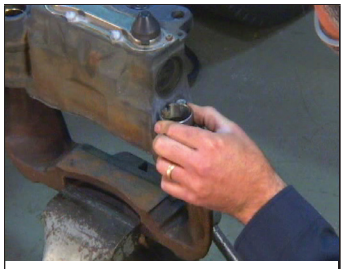

Figure 78 – Position the New Bushing

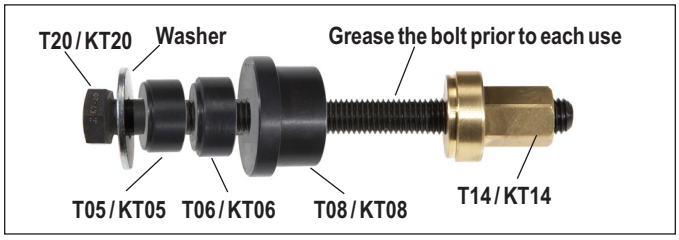

Figure 79 – Short Guide Pin Bushing Installation Tool

5.6.27 *Use the tool combination shown in Figure 79* to draw the bushing (6) into the caliper. *See also Figure 80*, to see the orientation (with tool T14 at the top). Hand tighten the nut (T14) into position. Then tighten the bolt (T20) using a box end wrench or socket to draw the bushing (6) into the caliper until the bushing (6) contacts the machined step in the bore. Remove the tool.

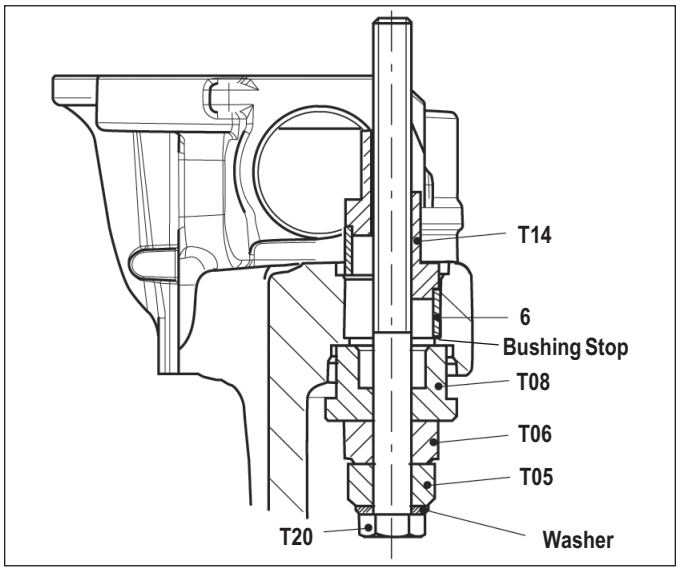

Figure 80 – Guide Pin Bushing Installation

5.6.28 Using a punch, bend the tab into the groove by aligning the punch with the upper part of the tab and tapping the punch with a hammer.

5.6.29 Coat the inside of the bushing (6) with a light coat of the white grease included in the kit.

5.6.30 Install the two identical inner boots (9) by first cleaning the area where the inner boots will be installed and inspect for corrosion. If the sealing surface of the caliper is damaged, replace the caliper.

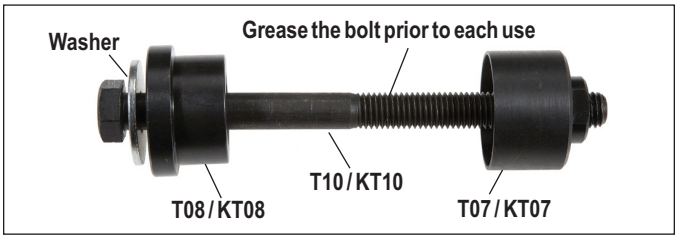

Figure 81 – Short Guide Pin Boot Installation Tool

5.6.31 *See Figure 82.* Place a boot into the installation tool (T7), making sure that the inner bellows are arranged close to the side walls of the tool and will not be damaged during installation. Also check that the outer edge of the boot rests on the front edge of the tool.

Figure 82 – Position the New Boot in the Installation Tool (T7)

5.6.32 Using 70 in-lbs (8 Nm) of torque maximum, tighten bolt (T10) to install the inner boot.

5.6.33 Repeat the installation procedure for the second inner boot.

5.6.34 Check that the boots are held securely in place and that no damage occurred during installation.

5.6.35 *See Figure 83.* To install the guide pins, first lubricate both guide pins with the white grease supplied. Insert the guide pins into their respective bores with the grooved end towards the bellows.

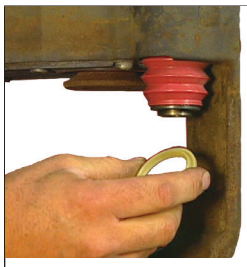

Figure 83 – Place the Retaining Ring onto the Groove in the Guide Pin

Fit the lip in the end of the inner boots (8) into the groove of the guide pins. Push on each ring (7) ensuring that the boot (9) is engaged onto the end of the guide pins (5 or 6).

5.6.36 With the caliper resting on a bench, slide the carrier into place with a slight rocking motion, taking care that as you do so, the inner boots and guide pins are seated in their proper place on the carrier.

5.6.37 Identify the two caliper bolts (39) and (40). With the shorter bolt placed in the floating pin bushing (4), and the longer bolt placed in the fixed pin bushing (5), begin to tighten the bolts. With the caliper/carrier in a vice, continue installing the bolts to a torque of 133 ft-lbs (180 Nm). Finally, tighten each bolt an additional 90º (ninety degrees).

Installation of the Guide Pin Caps

5.6.38 *See Figure 84.* Place the caliper/carrier assembly on a bench so that the inner boots are fully compressed, check that the bores are clean and dry (e.g. free from lubrication).

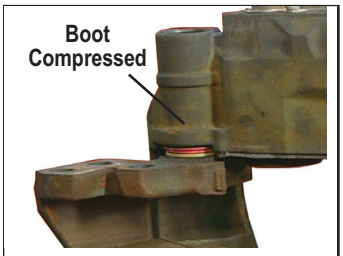

Figure 84 – Boots Must Be Compressed Fully During Cap Installation

Note: It is important that the inner boots are fully compressed during this procedure to ensure that the least amount of air is retained within the guide pin channel. If too much air is trapped, the bellows can potentially be damaged during the operation of the brake. *It is also important that the technician double-check that the retaining rings remain in their correct position during this procedure.*

5.6.39 Clean the two caps, and check that the caliper surfaces where the caps will be installed are clean and have no signs of damage.

5.6.40 Select one cap to install. Using the correct press-in tool — the smaller cap (10) installs in the long guide pin side using tool (T26), and the larger cap (68) installs in the short guide pin side using tool (T27) — place the cap in position, using the machined channel in the caliper to assist in centering the tool.

Figure 85 – Boots Must Be Compressed Fully During Cap Installation

Use a hammer to tap the cap into position. *See Figure 85.* Note that the tool needs to remain perpendicular to the channel to prevent damage during installation. Note that, after installation, the smaller cap (10) extends 0.08 in. (2 mm.), and the larger cap (68) extends 0.61 in. (15.5 mm.).

Repeat for the second cap.

5.6.41 Check that the guide pins move freely when the carrier is moved laterally, and that air is not trapped within the inner boots, and that the boots (9) and ring (58) are in the proper position before continuing with the installation.

5.6.42 Install the caliper/carrier *(See Section 5.3).*

5.6.43 Install the brake chamber *(See Section 5.4).*

5.6.44 Install the brake pads *(See Section 5.2).*

5.7 BENDIX® SPLINED DISC® HUB ROTOR

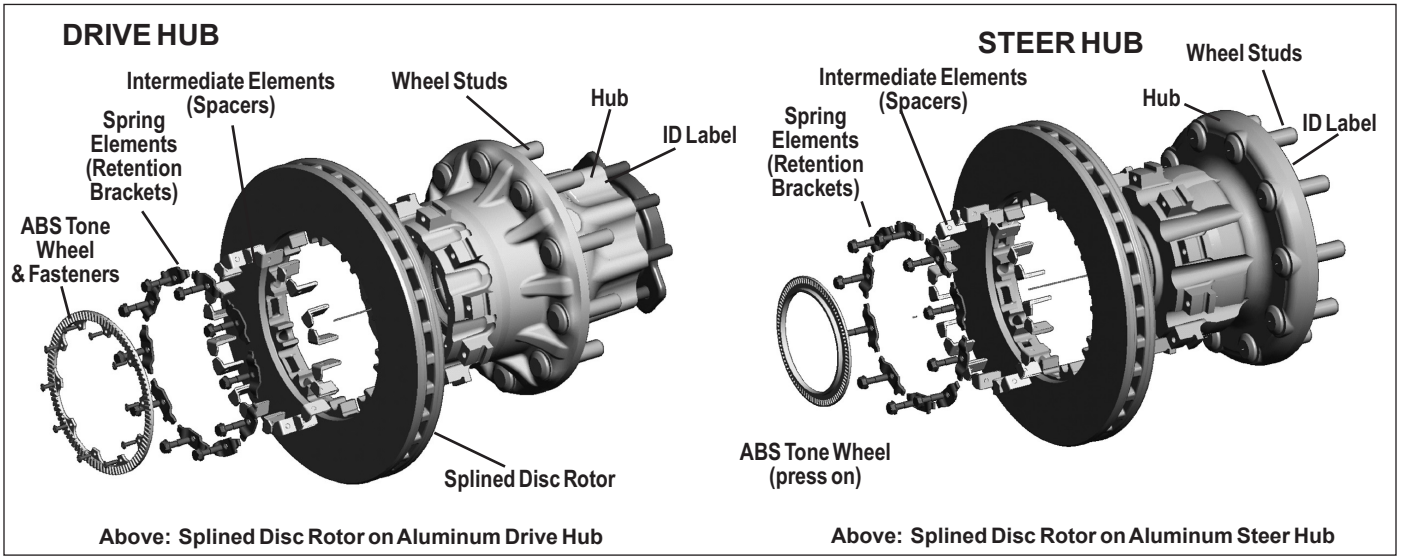

Figure 86 – Splined Disc Rotor Examples - Exploded Views

Bendix® Splined Disc® Hub Rotors are designed to assist vehicle maintenance by typically allowing the rotor to be serviced without requiring the entire hub/rotor assembly be replaced.

Periodic inspection of the Splined Disc attachment hardware is recommended to ensure optimum braking performance. Bendix recommends verifying the torque on the spring element fasteners whenever a brake inspection is performed.

NOTE: Anytime that the entire hub/rotor assembly is removed, Bendix recommends that the wheel seal also be replaced at the same time, USING A HIGH-TEMPERATURE SEAL. Follow the wheel seal and/or vehicle manufacturer's guidelines for full installation instructions. Adjust the bearings and refill bearing oil to vehicle manufacturer's specifications.

When replacing a splined disc rotor, Bendix strongly recommends that the brake pads be replaced (as an axle set.) Contact 1-800-AIR-BRAKE for the appropriate brake pad kit. Rotor replacement necessitates the removal of the pads.

CAUTION: Follow all safe maintenance practices, including those listed on page 2 of this document. Park the vehicle (by other means than the foundation brakes) on level ground and chock the wheels. Also read the vehicle manufacturer's recommendations. When installing pads, where appropriate, use heavy duty gloves and always keep fingers away from potential pinch hazard areas.

Bendix® Air Disc Brakes are precision-engineered braking mechanisms. The “friction couple” braking characteristics have been carefully optimized and the rotor design and materials have been matched with special formulation brake pads for optimal performance, therefore use only genuine Bendix® brand parts and brake pads.

Rotor Replacement

5.7.1 Before removing the brake pads it is strongly recommended that the air disc brake adjuster mechanism be checked for correct operation (*See Section 4.1*). When replacing brake pads, Bendix strongly recommends that the pads be replaced as an axle set.

5.7.2 Refer to the vehicle manufacturer’s recommendations and release (or cage) spring brakes and remove the wheel.

5.7.3 Remove the pads (*See Section 5.2*).

5.7.4 Remove the air disc brake (*See Section 5.3)*.

5.7.5 Remove the hub rotor assembly.

Note: Follow the vehicle manufacturer's guidelines for removal of the wheel hub and rotor assembly from the vehicle in lieu of these instructions, where available.

CAUTION: Be sure to secure both the rotor and hub before removing the retention clips.

5.7.6 Remove and discard the ten spring elements.

5.7.7 On drive axles, the ABS tone ring must also be removed. *(See Figure 86.)* Retain for reinstallation.

5.7.8 Use suitable hand tools to remove the intermediate elements (spacers). Remove all the right-hand intermediate elements (spacers) of each set first and then the rotor can be turned slightly to release the remaining intermediate elements (spacers). In all cases, take care not to damage the hub and its teeth. Remove and discard the intermediate elements (spacers) and retention clips attaching the rotor. Discard the rotor.

5.7.9 Following industry standards, clean and inspect the hub before installing the rotor. Look for corrosion and/or damage to the hub and inspect the wheel speed tone ring. Where necessary, consult the hub manufacturer's guidelines for more details.

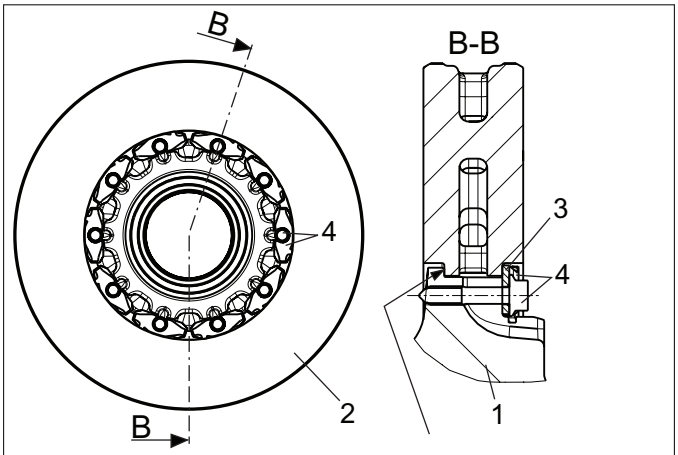

KEY
1 - Wheel Hub
2 - Splined Disc Rotor
3 - Intermediate Element (Spacer)
4 - Spring Element (Fastener), including retention clips

Figure 87 – Rotor with Cross-Section View

Figure 88 – Rotor Installation

ROTOR INSTALLATION

5.7.10 *See Figures 87 through 91.* Place the rotor into position on the hub. Install the new intermediate elements (spacers) *as shown in Figure 89*. With all the intermediate elements (spacers) correctly inserted into position, verify that the gap between the intermediate elements (spacers) and the wheel hub does not exceed 0.015 in (0.4 mm). If a gap is found that exceeds this maximum value, verify the installation of new intermediate elements (spacers). Replace the wheel hub if the excess gap cannot be corrected with proper installation of new rotor retaining hardware.

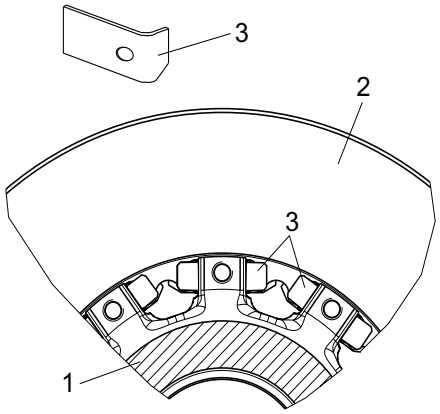

KEY
1 - Wheel Hub
2 - Splined Disc Rotor
3 - Intermediate Elements (Spacers)

Figure 89 – Installing Intermediate Elements (spacers)

Figure 90 – Intermediate Elements (Spacers) Installed

5.7.11 Install the ten new spring elements included in the kit in an evenly-distributed cross-pattern sequence. Torque to 22.1 ft-lbs (30 Nm)

5.7.12 Where the tone ring was removed during step 5.7.7, reinstall the tone ring. Use a professional grade fastener compound, such as Loctite® Blue 242®, on the fasteners. Torque to 19-22 in-lbs (2.1-2.5 Nm)

5.7.13 Reinstall the hub rotor assembly using a new high-temperature wheel seal, following the vehicle manufacturer's instructions.

5.7.14 Reinstall the air disc brake *(See Section 5.3).* Supporting the air disc brake by all necessary means, attach the brake to the anchor plate using six bolts and washers as required (Bendix recommends the original bolts not be re-used). Torque to vehicle manufacturer's specifications. If torque values and bolts are not specified by the vehicle manufacturer, then torque according to the chart shown in Table 4. Be sure to select bolts with the same thread pitch, length and grade as originally provided from vehicle manufacturer.

5.7.15 Reinstall the brake pads *(See Section 5.2).*

Figure 91 – Fasteners Installed

CONTACTING BENDIX

foundationbrakes.com

- Bendix on-line information is available 24/7/365. It's your complete Bendix resource.

Bendix Technical Assistance Team

- For direct personal technical support, call the Bendix TechTeam at 1-800-AIR-BRAKE (1-800-247-2725, option 2).
- Representatives are available to assist you Monday through Friday, 8:00 am to 6:00 pm ET, or email the Bendix Tech Team at: techteam@bendix.com.

To better serve you, please collect the following information before you call the Bendix TechTeam, or include this information in your email:

- Bendix product model number, part number and configuration.
- Vehicle make and model.
- Vehicle configuration. (Number of axles, tire size, etc.)
- System performance symptoms: When do they occur?
- What troubleshooting/measurements have been performed?
- What Bendix service data literature do you have or need?

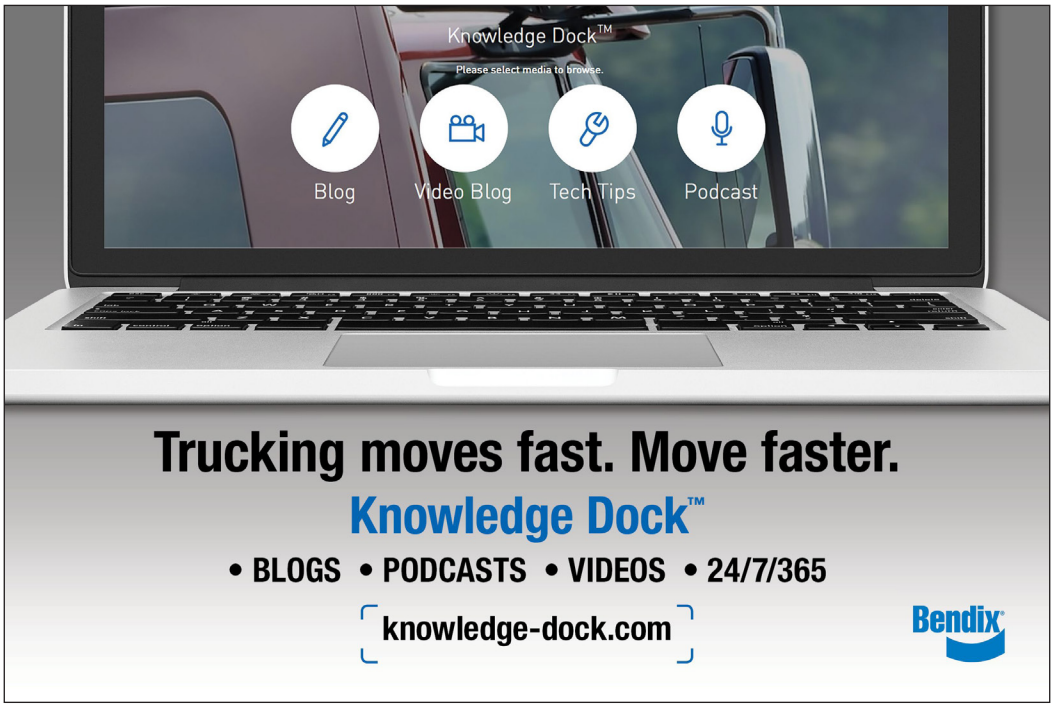

Log-on and Learn from the Best
On-line training that's available when you are – 24/7/365.
Visit www.brake-school.com.

Bendix® brand foundation brake products are brought to you by:

Bendix Spicer
Foundation Brake LLC
A Bendix CVS and Dana Joint Venture

SD-23-7541 Rev. 004 ©2017 Bendix Spicer Foundation Brake LLC • All Rights Reserved • 04/17