NOVA BUS

SERVICE BULLETIN BS3874E

REFERENCE:	Nova Bus Manuals
SECTION:	19: Fire suppression system
RS Nº:	MQR 7621-919
EFFECTIVE IN PROD.:	N/A

APPLICATION DEADLINE: 2018DE12
CLAIM REFERENCE NUMBER: WB-3874

SUBJECT:	Engine compartment ventilation
JUSTIFICATION:	Engine compartment may have high temperature issues due to inadequate heat dissipation.

LEVEL	DESCRIPTION	DIRECT CHARGES		TIME
		LABOUR	MATERIAL	
1	Install a ventilation fan in the engine compartment and reprogram the V-BEA system.	Customer	Nova Bus	5 h
2	–	–	–	–

DISPOSAL OF PARTS

REMOVED PARTS ARE:	DISCARDED *	RETAINED	* Dispose of the unused parts and the defective parts in accordance with local environmental standards in effect.
	Yes	–	

REVISION HISTORY

REV.	DATE	CHANGE DESCRIPTION	WRITTEN BY
NR	2017JL12	Initial release	André Pelletier

APPROVED BY: Daniel Theriault

Digitally signed by Daniel Theriault
DN: cn=Daniel Theriault, o=Nova Bus, ou, email=daniel.theriault@volvo.com, c=CA
Date: 2017.07.13 11:46:06 -04'00'

MATERIAL

QTY	PART Nº	REV.	DESCRIPTION	REPLACES PART N°
LEVEL 1				
1	N84446	B	BRACKET SENSOR ASSEMBLY	–
2	N38593	–	NUT FLANGED WITH INSERT	–
1	N87563	–	GRILL LOUVER (no paint)	–
4	N16646	–	WASHER FLAT M6 SS DIN125A	–
1	N80438	C	FAN AXIAL W BRUSHLESS DC MOTOR	–
14	N56339	–	TIE TEFZEL CABLE TIES	–
8	N44890	A	NUT LOCKNYL M6 FL SSA2 C70	–
4	N71491	–	SCREW M6X35 MACH BUTT ALLEN SS	–
1	N44884-01	–	SCREW M6X20 FL SSA2 C70 D6921	–
2	N57040	A	TIECABLE MOUNT HI-HEAT	–
1	N28219	–	WASHER OVERSIZE M8	–
1	N43233	–	NUT HEX M8 FLANGED WITH INSERT	–
1	N43774	–	SCREW M8X25 FL SSA2 C70 D6921	–
1	N78869	–	SENSOR TEMP	–
1	N28734-02	–	RESISTOR ASM 1K 2WATT	–
1	2394308	B	BRACKET CLIP	–
2	N44881-02	–	SCREW M6X25 FL YP C8.8 D6921	–
6	N75179	–	RIVET 3/16X1.0 BLIND DOMED ALU	–
1	N11690-30	–	CIRCUIT BREAKER 30A GREEN	–
1	N632000531	A	WIRE KIT #1 FAN ENGINE	–
1	N90944		DECAL SMALL STRIP CTTRANSIT	–
*Note 1	N87007	–	JIG REAR DOOR CUT-OUT ASSEMBLY	–
LEVEL 2				
–	–	–	–	–

Materials will be available within 126 days once your order has been placed. To order, please contact Prevost Parts by phone at 1-800-771-6682, by fax at 1-888-668-2555 or by email at prevostparts.commandes@volvo.com. Specify document number, quantity of parts required and shipping address.

***Note 1: only 1 jig will be supplied to perform thls service bulletin and service bulletin BS3973E. The jig is available to order only under the BS3973E**

CLIENT	ORDER	ROAD NUMBER		VIN (2NVY/4RKY...)		QTY	PROGRAM	REV
		FROM	TO	FROM	TO			
CT Transit - Connecticut	L571	1041	1065	S92U1A4000139	S92U0A4000164	25	FB_CON6HH___00	L

TO OBTAIN THE SOFTWARE REVISION REQUIRED ("L" OR LATER), CONTACT YOUR AFTER-SALES REPRESENTATIVE.

CLIENT	ORDER	ROAD NUMBER		VIN (2NVY/4RKY...)		QTY
		FROM	TO	FROM	TO	
CT Transit - Connecticut	L571	1101	1110	S92YXB4000144	S92Y4B4000169	10

WARNING

Follow your internal safety procedures.

WARNING

Disconnect the batteries prior to starting any work on the vehicle. See Nova Bus maintenance manual section *16: Batteries***.**

PROCEDURE

ENGINE FAN INSTALLATION

1.1. Turn off power switch in battery compartment. Disconnect the negative battery cable.

1.2. Install a protection blanket in the engine compartment to collect debris.

1.3. Position jig N87007 on the engine door. Use the openings in the jig to line up with decal position. Adjust and reposition the jig as needed. See Figure 1.

1.4. Use the jig to mark the circle and drill the four 5/16 in. (7.94 mm) diameter holes and the six 3/16 in. (4.76 mm) diameter holes.

1.5. Drill a hole inside the marked area and cut the circular opening. The use of a jig saw is recommended.

1.6. Remove sharp edges with sandpaper or a file. Clean both sides.

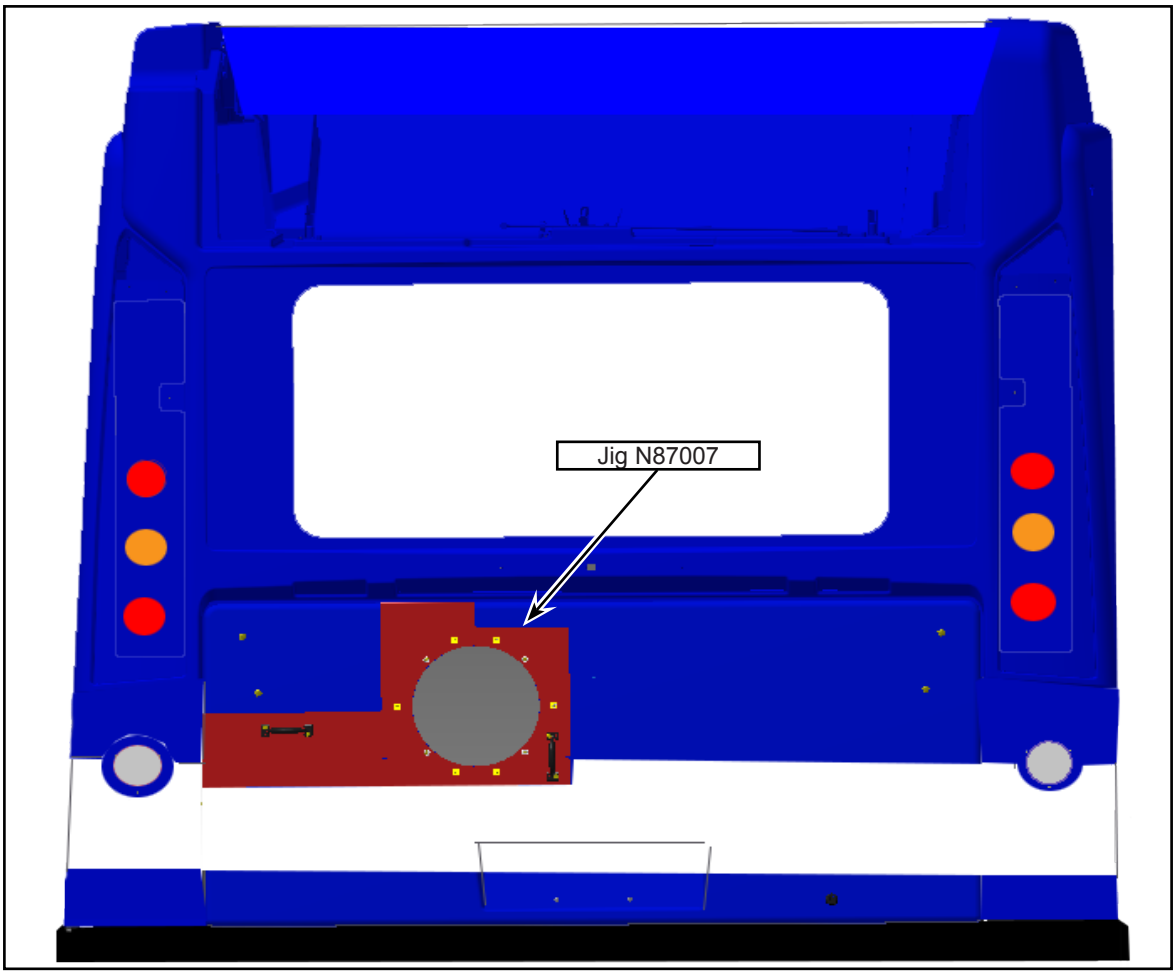

Figure 1 - Install the Jig on the Engine Compartment Access Door

1.7. Install temporarily grill louver N87563-01 onto the engine door. The openings must be pointing down on the outside.

1.8. Wash and degrease all surfaces prior to installing decal N90904-02 on the grill and aligning it with the decals on the vehicle.

1.9. Remove the grill and apply a clear coat after installation. Allow time to dry.

1.10. Install grill louver N87563-01 onto the engine door. Install the six rivets supplied.

1.11. Install electric fan N80438 on the inside with four N71491 bolts, N16646 washers and N44890 nuts. Install cable tie mount N57040 onto the upper curbside screw. See Figures 2 and 3.

1.12. Apply thread locker 9985283 or equivalent and torque the nuts to 7.3 lb-ft (10 N•m).

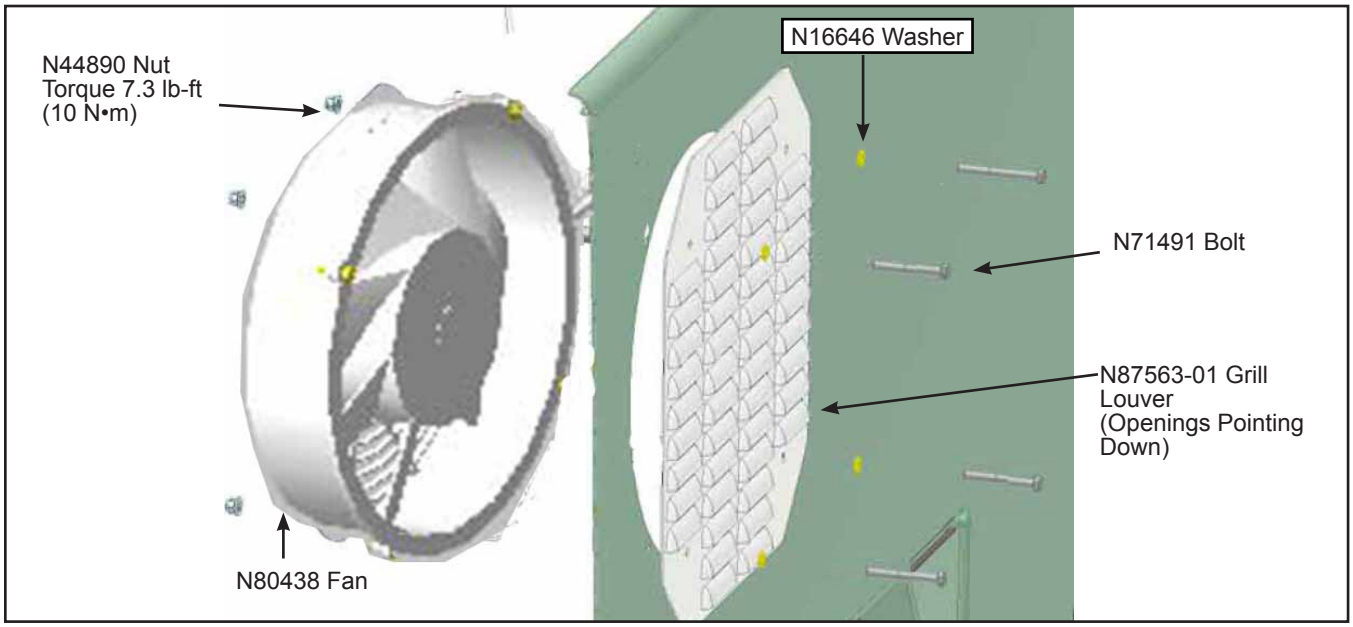

Figure 2 - Install Grill Louver and Electrical Fan

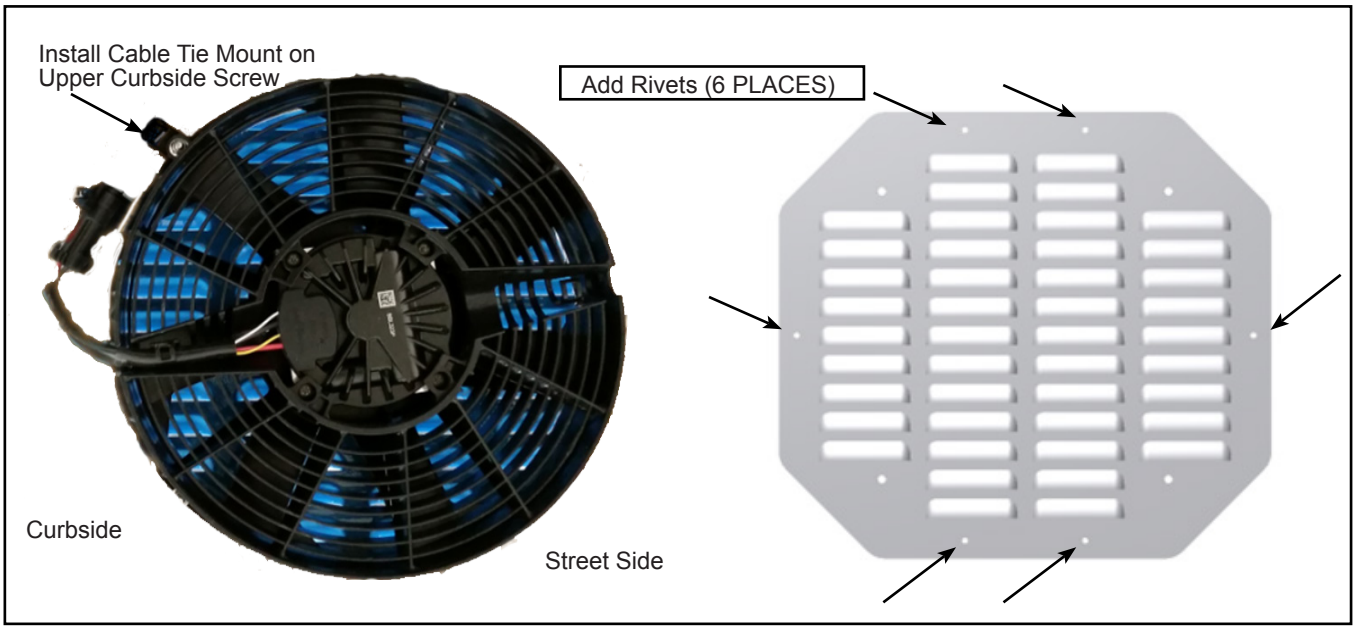

Figure 3 - Install Cable Tie Mount

HARNESS INSTALLATION

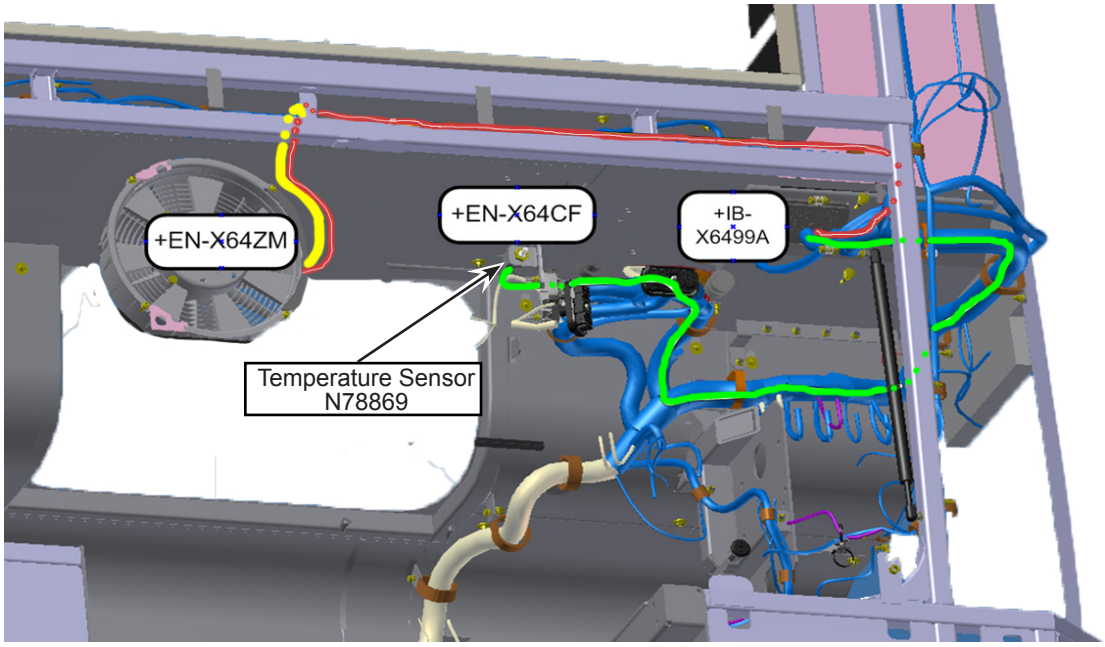

View From the Outside

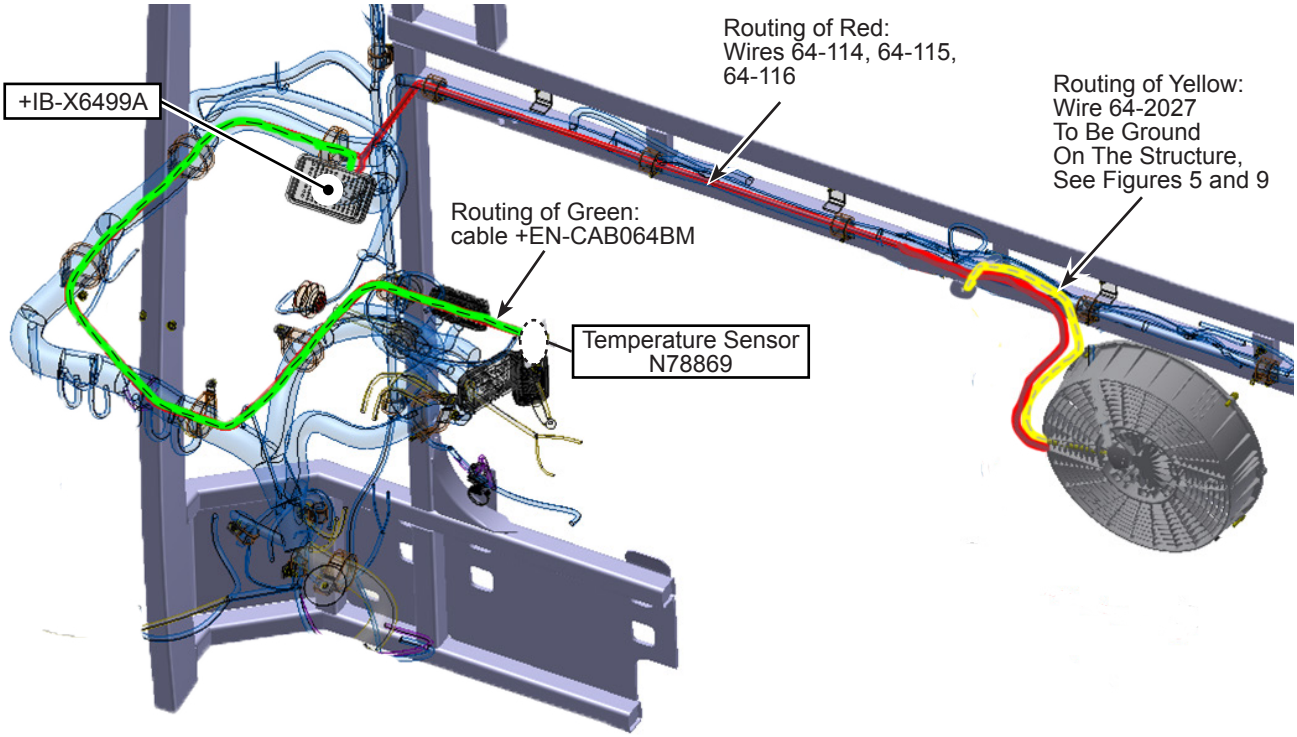

View From the Inside

Figure 4 - Routing of New Harness N632000531

1.13. Drill 21/64 in. (8 mm) hole in the bracket of the structure for ground installation.

1.14. Remove the paint and clean the surface for proper ground contact. See Figures 5 and 9.

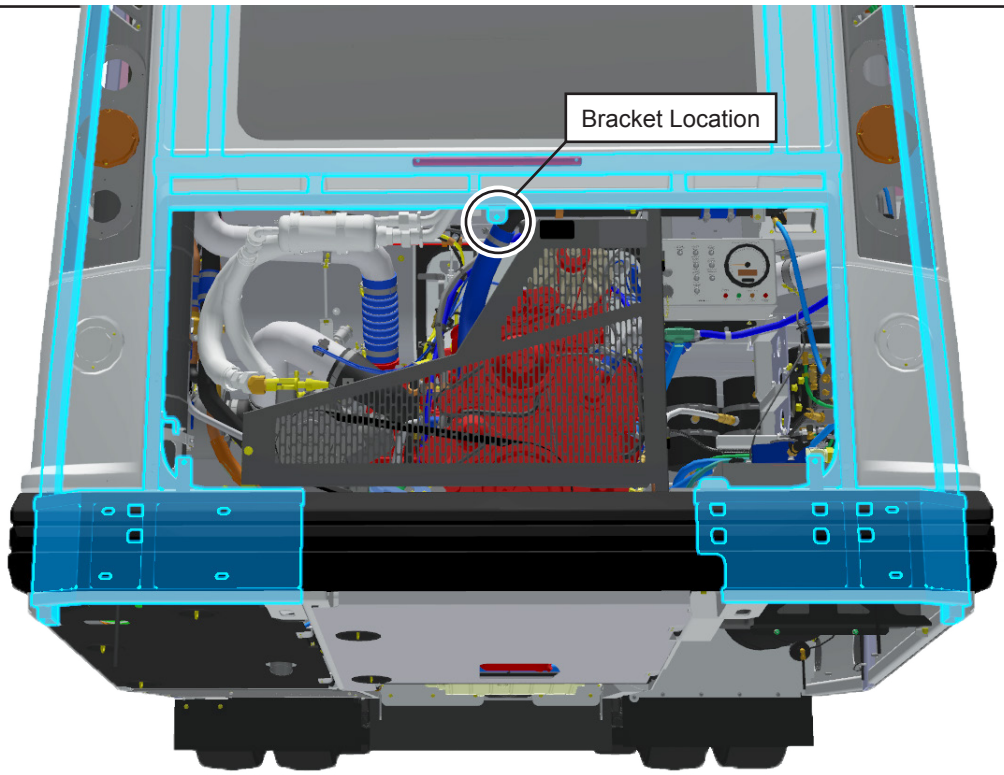

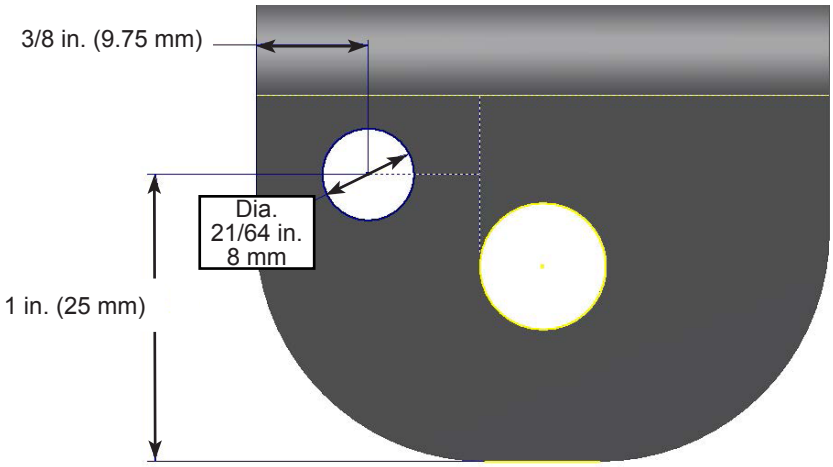

Figure 5 - Drill 21/64 in. (8 mm) hole for Ground

1.15. Connect the electric fan connector to the N632000531 harness connector and attach the fan connector with an N56339 high temperature cable tie to the N57040 cable tie mount. Ensure that the harness is centered in the built-in fan channel and secure with cable tie N56339. See Figure 6.

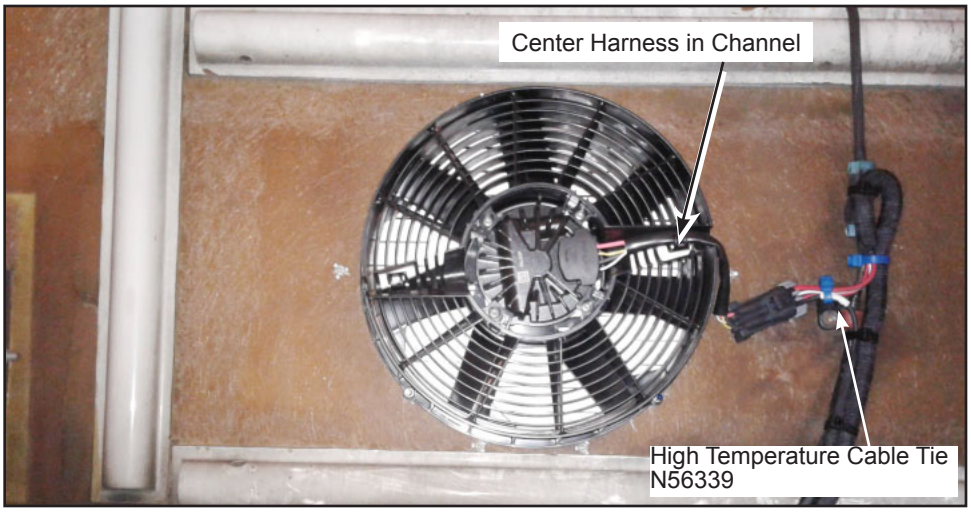

Figure 6 - Connect Harness to the Fan

1.16. Route N632000531 harness by following existing license plate harness towards main engine harness 64 on the curbside and then up to the IB-X6499A connector. See Figure 4.

1.17. Secure harness N632000531 to the main harness with N56339 cable ties until temperature sensor location is reached.

1.18. Install the N57040 cable tie mount onto the 2394308 harness bracket with an N44881-02 bolt and N44890 nut. See Figure 7.

1.19. Use the rear seat hatch to access the engine compartment. Install the 2394308 harness bracket with existing hardware. See Figure 7.

1.20. Install bracket sensor assembly N84446 over the +MT-X9564A connector bracket.

1.21. Connect the heat sensor to the harness as indicated in the electrical wiring diagram. See Figure 8. Install the sensor. See Figure 7.

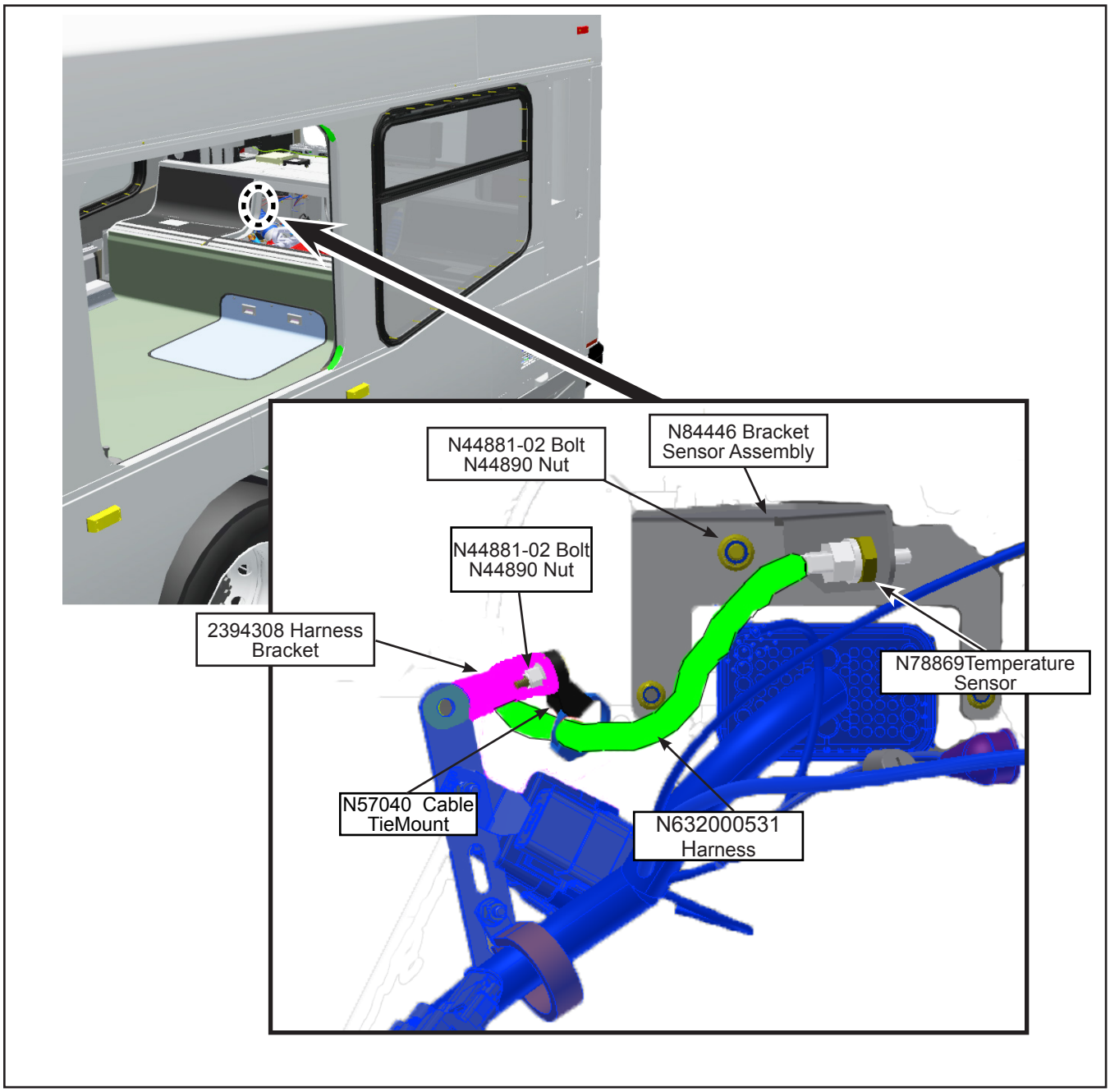

Figure 7 - Install and Connect Temperature Sensor

1.22. Install harness as shown in the electrical wiring diagram. See Figure 8.

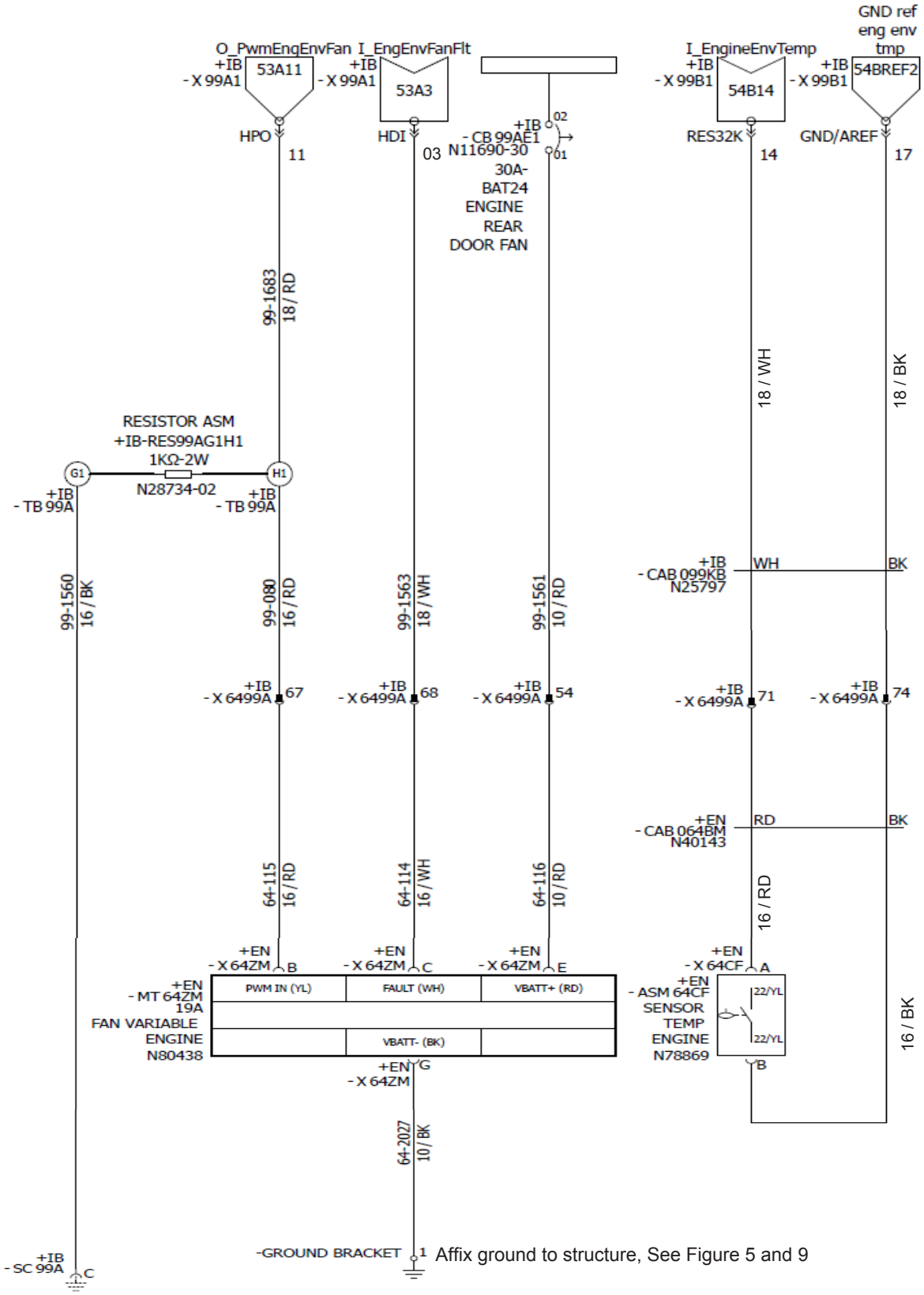

Figure 8 - Electrical Diagram

1.23. Connect wire 64-2027 (10 BK) to the vehicle structure. Make sure there is no paint between the ground and the structure. See Figures 5 and 9. Apply N35450 Maxi-Coat corrosion inhibitor or equivalent to protect electric connection.

Figure 9 - Install Ground

LOCATION: ENGINE COMPARTMENT IB CONNECTOR IB-X6499A

1.24. Connect wire 64-115 (16 RD) to connector +IB-X6499A at position 67.
1.25. Connect wire 64-114 (16 WH) to connector +IB-X6499A at position 68.
1.26. Connect wire 64-116 (10 RD) to connector +IB-X6499A at position 54.
1.27. Connect wire CAB064BM (16 RD) to connector +IB-X6499A at position 71.
1.28. Connect wire CAB064BM (16 BK) to connector +IB-X6499A at position 74.

LOCATION: AT THE REAR INSIDE OF THE VEHICLE IN THE IB ELECTRICAL PANEL.

Connector IB-X6499A. Pinning wires. See Figure 10.

1.29. Connect wire 99-080 (16 RD) to connector +IB-X6499A at position 67.
1.30. Connect wire 99-1563 (18 WH) to connector +IB-X6499A at position 68.
1.31. Connect wire 99-1561 (10 RD) to connector +IB-X6499A at position 54.
1.32. Connect wire CAB099KB (18 BK) to connector +IB-X6499A at position 74.
1.33. Connect wire CAB099KB (18 WH) to connector +IB-X6499A at position 71.

Module 53. See Figure 10.

1.34. Connect wire 99-1683 (18 RD) to IOB module 53 connector +IB-X99A1 (HPO) at position 11.

Module 53. See Figure 10.

1.35. Connect wire 99-1563 (18 WH) to IOA module 53 connector +IB-X99A1 (HDI) at position 01.

Module 54. See Figure 10.

1.36. Connect wire CAB099KB (18 WH) to IOB module 54 connector +IB-X99B1 at position 14.

1.37. Connect wire CAB099KB (18 BK) to IOB module 54 connector +IB-X99B1 at position 17.

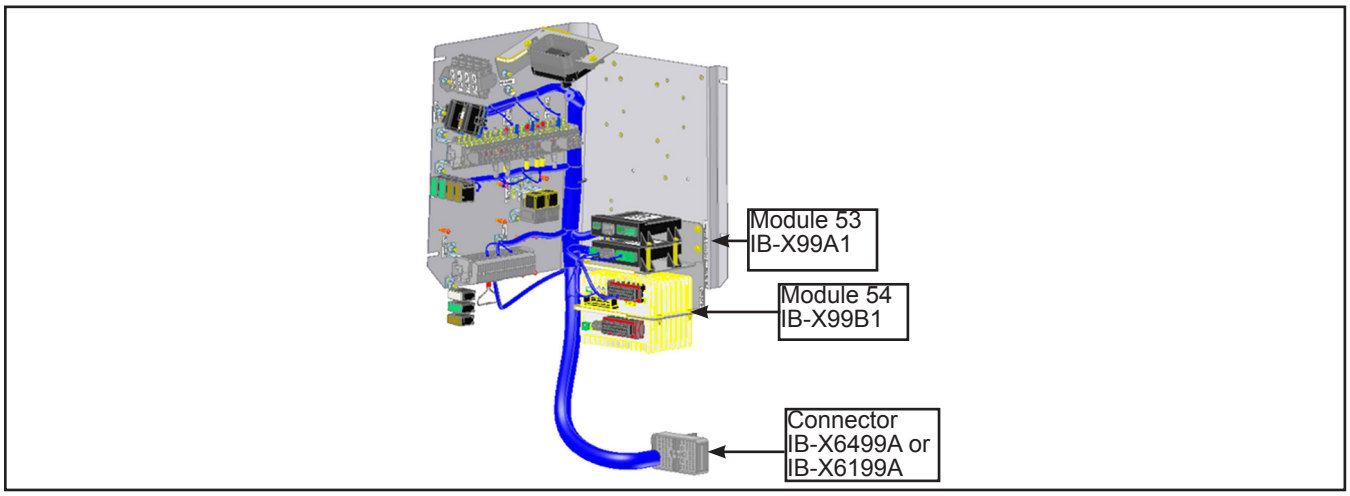

Figure 10 - IB Compartment

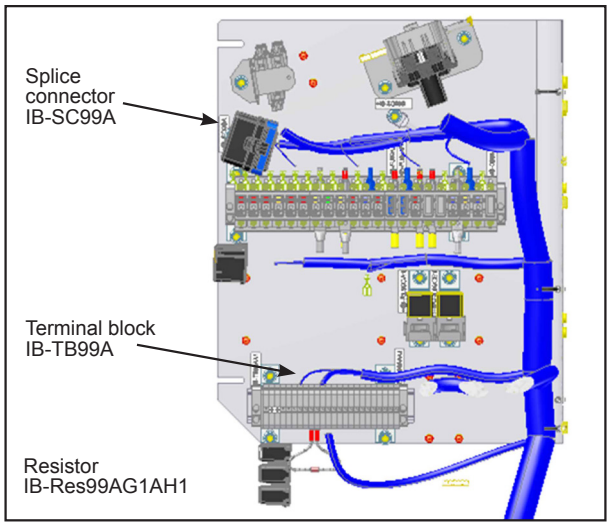

Figure 11 - IB Panel

1.38. Connect wire 99-1561 (10 RD) to +IB-CB99AE1.

1.39. Install the N11690-30 circuit breaker at location +IB-CB99AE.

Terminal block. See Figure 11.

1.40. Install the N28734-02 resistor across locations +IB-TB99A H1 and G1.

1.41. Connect wire 99-1683 (18 RD) to +IB-TB99A at position H1.

1.42. Connect wire 99-080 (16 RD) to +IB-TB99A at position H1.

1.43. Connect wire 99-1560 (16 BK) to +IB-TB99A at position G1.

Splice connector. See Figure 11.

1.44. Connect wire 99-1560 (16 BK) to splice connector +IB-SC99A at position C.

Wiring completion and testing.

1.45. Route the wires along the existing harness. Use high cable ties to secure the wires.

1.46. Reconnect the negative battery cable. Turn on power switch in battery compartment.

Install the program.

1.47. Re-program the V-BEA system using the program listed in the client list (page 2 of this document) in accordance with section **16: ELECTRICAL SYSTEM** of the Nova Bus maintenance manual.

1.48. When the vehicle is started, the fan will turn for 10 seconds if the wiring is correct and the program properly installed.

Validation of fan functions.

1.49. Raise sensor temperature above the applicable threshold. The use of a heat gun and thermometer gun is suggested.

1.50. Under this condition, the engine fan will operate at low speed (20%).

1.51. Raise temperature to 150 ºF (65 ºC). The engine fan will operate at maximum speed (100%).

Fan operating conditions.

At ambient cold temperature, below 55 ºF (13 ºC). If the HVAC clutch is activated. Engine running.

1.52. When engine compartment temperature is below 135 ºF (57 ºC), the fan does not operate.

1.53. When engine compartment temperature is 135 ºF (57 ºC), the fan operates at low speed (20%).

1.54. When engine compartment temperature is between 135 ºF (57 ºC) and 150 ºF (65 ºC), the speed of operation increases gradually.

1.55. When engine compartment temperature is 150 ºF (65 ºC) or above, the fan operates at maximum speed (100%).

1.56. Use cold air to lower the ambient sensor temperature below 55 ºF (13 ºC).

1.57. Use a heat gun on the engine compartment sensor to raise temperature from 135 ºF (57 ºC) to 150 ºF (65 ºC).

At ambient hot temperature, above 55 ºF (13 ºC). If the HVAC clutch is not activated. Engine running.

1.58. When engine compartment temperature is below 95 ºF (35 ºC), the fan does not operate.

1.59. When engine compartment temperature is 95 ºF (35 ºC), the fan operates at low speed (20%).

1.60. When engine compartment temperature is between 95 ºF (35 ºC) and 150 ºF (65 ºC), the speed of operation increases gradually.

1.61. When engine compartment temperature is 150 ºF (65 ºC) or above, the fan operates at maximum speed (100%).

1.62. Use a heat gun to raise temperature from 95 ºF (35 ºC) to 150 ºF (65 ºC).

1.63. Read % of fan speed on the multiplex at two temperatures. At a temperature of 95 ºF (35 ºC), the fan operates at low speed (20%). At 150 ºF (65 ºC), the fan operates at maximum speed (100%).

Master run switch on and engine not running.

1.64. When engine compartment temperature is above 110 ºF (43 ºC), the fan operates at low speed (20%).

1.65. When engine compartment temperature is below 110 ºF (43 ºC), the fan does not operate.

1.66. Read % of fan speed on the multiplex at two temperatures.

NOVA BUS
Partenaire du transport collectif

Document no.: TD0000689
Emitted by: Jocelyn Phaneuf
Validated by: Jocelyn Phaneuf
Date: 2016-11-21
Revision:
EN no.: 172110

Revision details:

Document name :
LOGI ENGINE FAN CT TRANSIT

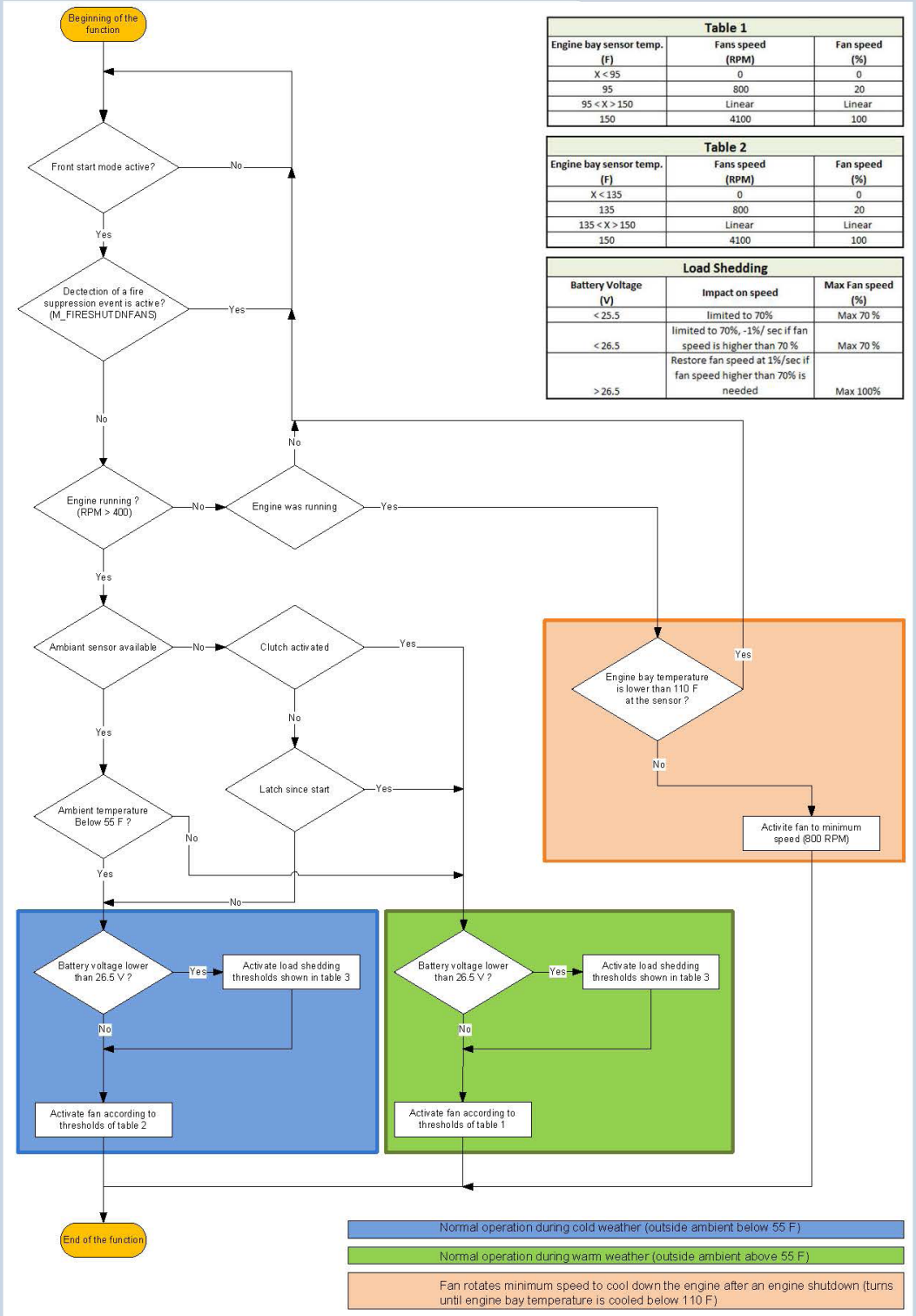

Table 1

Engine bay sensor temp. (F)	Fans speed (RPM)	Fan speed (%)
X < 95	0	0
95	800	20
95 < X > 150	Linear	Linear
150	4100	100

Table 2

Engine bay sensor temp. (F)	Fans speed (RPM)	Fan speed (%)
X < 135	0	0
135	800	20
135 < X > 150	Linear	Linear
150	4100	100

Load Shedding

Battery Voltage (V)	Impact on speed	Max Fan speed (%)
< 25.5	limited to 70%	Max 70 %
< 26.5	limited to 70%, -1%/ sec if fan speed is higher than 70 %	Max 70 %
> 26.5	Restore fan speed at 1%/sec if fan speed higher than 70% is needed	Max 100%

Figure 12 - Logic of Fan Operation

1.67. Remove the two dust pans circled in Figure 13.

1.68. Remove the center mud flap (may be reinstalled for the winter months). See Figure 14.

1.69. Put the vehicle back in service.❖

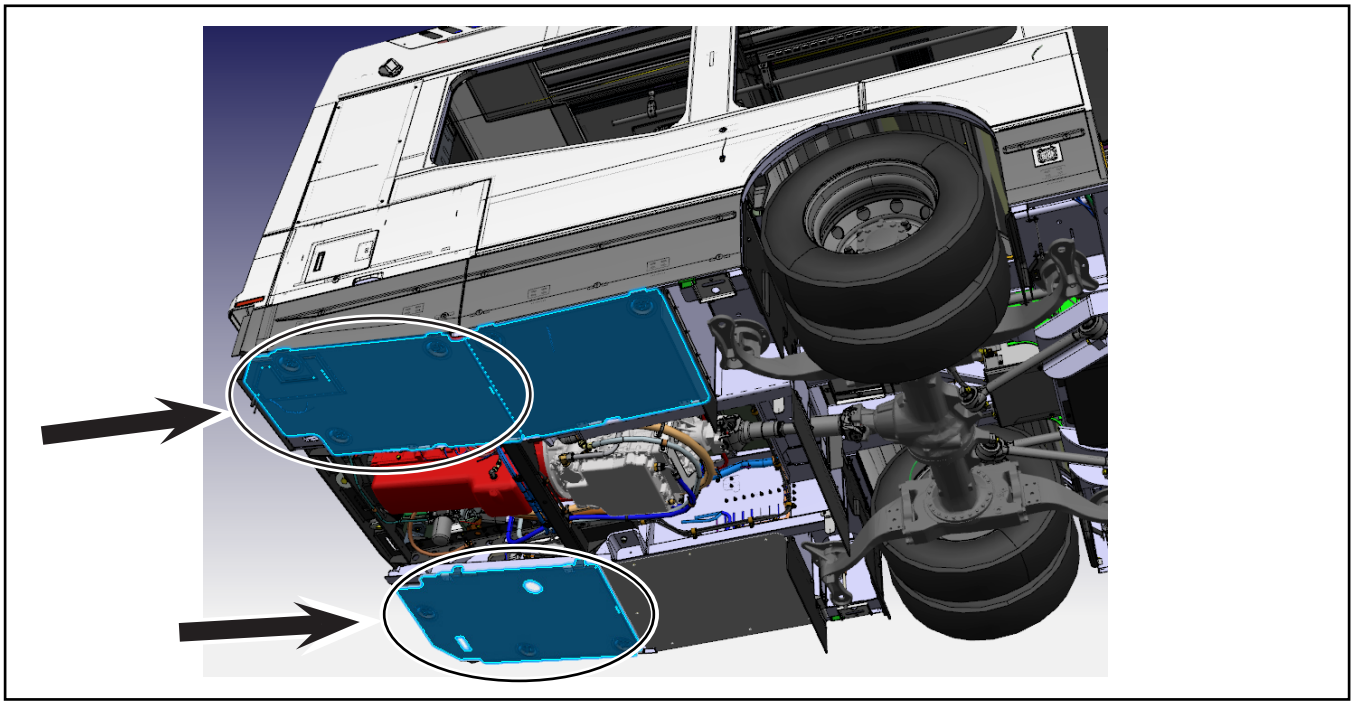

Figure 13 - Remove theTwo Dust Pans

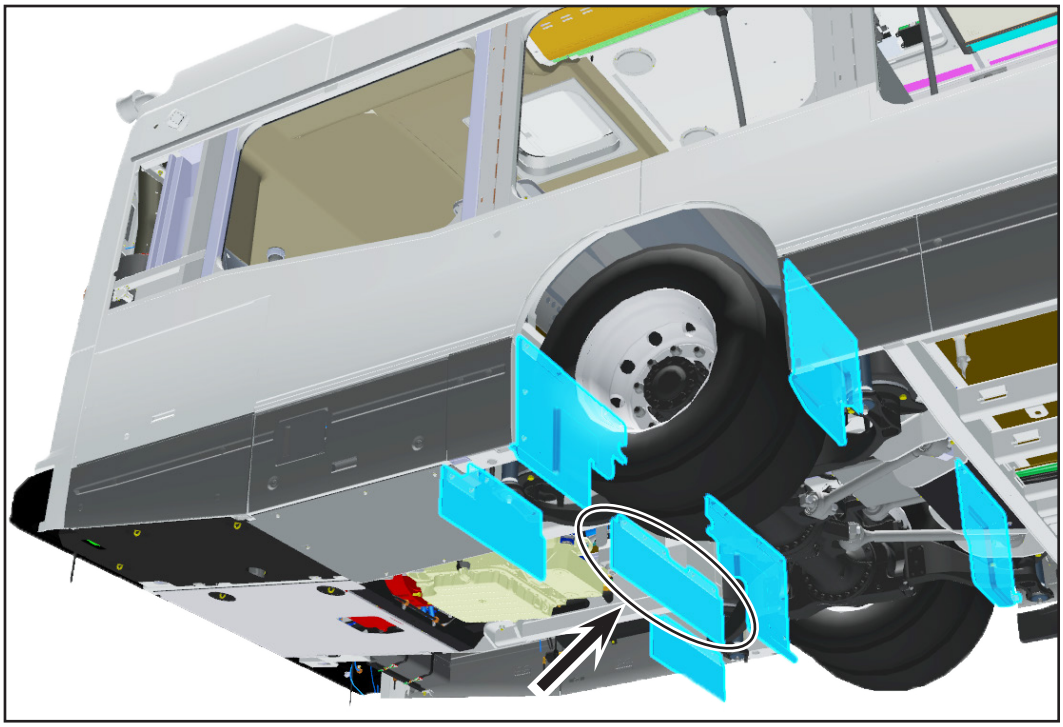

Figure 14 - Remove the Center Mud Flap