Technical Service Bulletin

Mazda North American Operations
Irvine, CA 92618-2922

© 2017 Mazda Motor of America, Inc.

Subject:	
POPPING AND/OR SQUEAKING NOISE FROM FRONT SHOCK ABSORBER AND/OR CREAKING NOISE FROM FRONT LOWER ARM BUSHING	**Bulletin No.:** 02-005/17 **Last Issued:** 03/16/2017

BULLETIN NOTES

This bulletin supersedes the previously issued bulletin(s) listed below. The changes are noted below in Red.

Previously Issued TSBs:	Date(s) Issued
02-005/17	01/13/17
02-001/16	10/10/16, 04/15/16, 02/23/16 and 01/08/16
02-004/15	05/12/15 and 04/24/15

APPLICABLE MODEL(S)/VINS

2014-2016 Mazda3 vehicles (Japan built and Mexico built) with VINs starting with JM1 and 3MZ

2017 Mazda3 vehicles (Japan built) with VINs lower than JM1BN******126187 (Produced before November 7, 2016)

2017 Mazda3 vehicles (Mexico built) with VINs starting with 3MZ

DESCRIPTION

Some vehicles may exhibit one or more of the following noises from the front suspension.

- A squeaking noise from the front shock absorber when turning the steering wheel at a vehicle standstill caused by stick-slip between the front strut bearing and the coil spring.
- A popping noise from the front shock absorber when passing over speed bumps caused by the bump stopper contacting the strut bearing when the shock absorber is compressed.
- A creaking noise from the lower arm when driving over road bumps at 20-40 km/h caused by stick-slip of the front lower arm bushing. The noise occurs when the road surface is wet or after a car washing, and becomes more noticeable as the speed bump gets higher.

To correct these problems, the following changes have been made.

- For the squeaking and popping noise, the shape of the bump stopper has been modified and a protector has been installed onto the coil spring.
- For the creaking noise, the friction of the lower arm bushing has been reduced by adding a dry coating.

Customers having this concern should have their vehicle repaired using the following repair procedure.

CONSUMER NOTICE: The information and instructions in this bulletin are intended for use by skilled technicians. Mazda technicians utilize the proper tools/ equipment and take training to correctly and safely maintain Mazda vehicles. These instructions should not be performed by "do-it-yourselfers." Customers should not assume this bulletin applies to their vehicle or that their vehicle will develop the described concern. To determine if the information applies, customers should contact their nearest authorized Mazda dealership. Mazda North American Operations reserves the right to alter the specifications and contents of this bulletin without obligation or advance notice. All rights reserved. No part of this bulletin may be reproduced in any form or by any means, electronic or mechanical---including photocopying and recording and the use of any kind of information storage and retrieval system ---without permission in writing.

© 2017 Mazda Motor of America, Inc.

REPAIR PROCEDURE

1. Verify the customer concern of noise coming from under the front of the vehicle when driving over speed bumps and/or driving on a rough road and/or turning the steering wheel at a standstill.

2. If the noise has been confirmed, check the VIN and perform the appropriate repair procedure according to the following tables.

Vehicle Spec	Vehicle Type A	Vehicle Type B	Vehicle Type C
JM1BM******** (2.5L with B45G-34-111)	100001 - 250356	250357 - 280997	280998 - 355940
JM1BM******** (2.0L with B45A-34-111)	100001 - 250356	250357 - 300898	300899 – 355940
JM1BN********	N/A	N/A	100001 – 126187
3MZBM********	100001 - 195510	195511 - 330142	N/A
3MZBN********	N/A	100001 - 999999	N/A

Repair to Perform by Vehicle Type	Vehicle Type A	Vehicle Type B	Vehicle Type C
1. Install Protector onto Spring	Perform	DO NOT Perform	DO NOT Perform
2. Replace Bump Stopper	Perform	Perform	DO NOT Perform
3. Replace Lower Arm Bushing	Perform	Perform	Perform

© 2017 Mazda Motor of America, Inc.

Protector Installation

3. Remove the spring according to MS3 online instructions or the Workshop Manual (section 02-13 FRONT SHOCK ABSORBER AND COIL SPRING DISASSEMBLY/ASSEMBLY).

4. Degrease 1.5 turns of the spring from the top.

5. Cut a thin strip of paper to 138 mm in length (or use a cloth type measuring tape).

6. Place the strip of paper (or cloth measuring tape) along the inner side of the coil spring starting at point (A) and mark the spot on the spring where (B) is. (B) is the starting point for the protector installation.

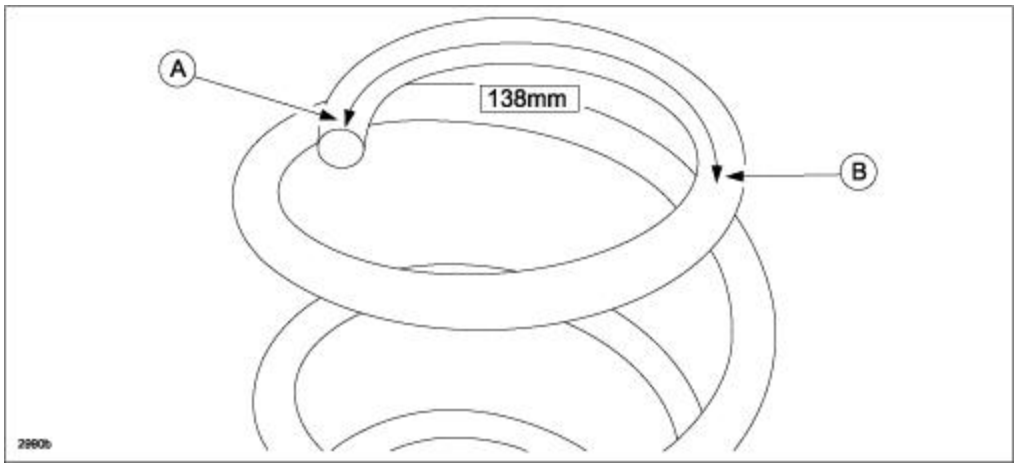

7. Install the protector (A) onto the coil spring aligning the end (slant cut side) with the marking at spot (B).

NOTE: Install the protector so the gap (C) is evenly aligned around the outer edge of the coil spring.

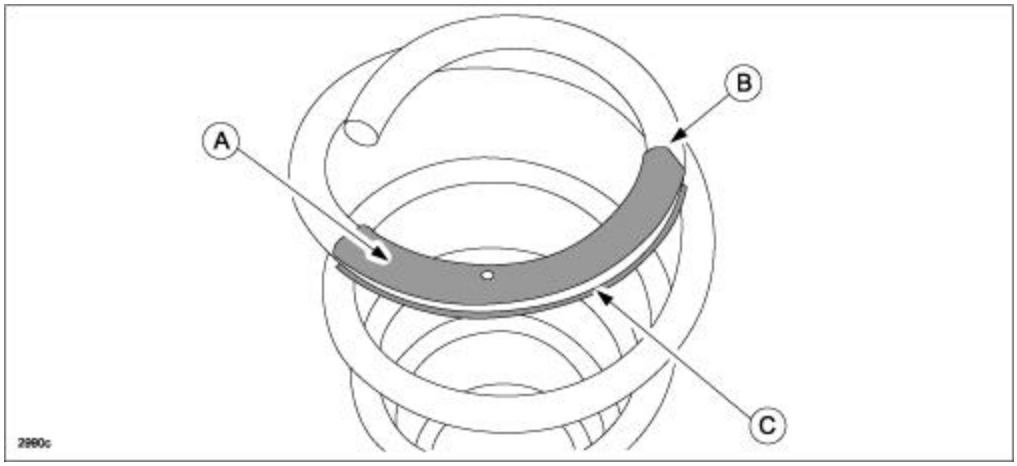

© 2017 Mazda Motor of America, Inc.

Bump Stopper Replacement

8. Replace the bump stopper with the modified one according to MS3 online instructions or the Workshop Manual (section 02-13 FRONT SHOCK ABSORBER AND COIL SPRING DISASSEMBLY/ASSEMBLY).

NOTE:

- Before removing the mounting rubber, mark its original position so it can be re-installed later to the same position.
- When replacing the bump stopper with a modified one, apply grease to upper side of the bump stopper and to the inside of the bump stopper (on the surface that contacts the damper rod).

CAUTION: It is not necessary to adjust the front wheel alignment because the front shock absorber and mounting rubber are not being replaced. However, make sure to install the mounting rubber to the original position.

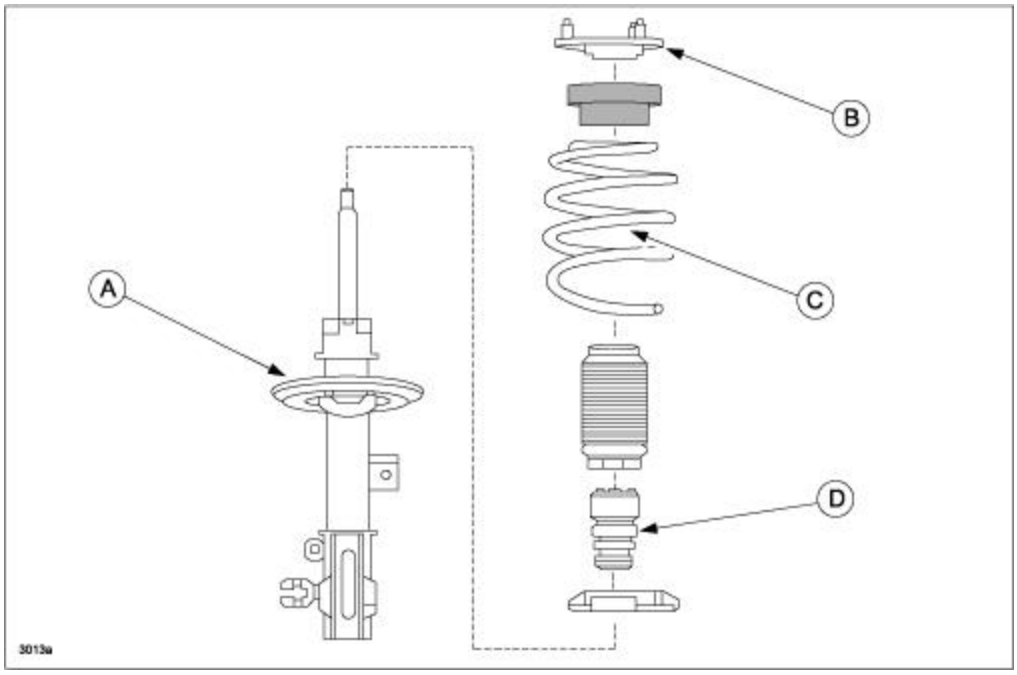

A	Front Shock Absorber	C	Coil Spring
B	Mounting Rubber	D	Bump Stopper

© 2017 Mazda Motor of America, Inc.

Lower Arm Bushing Replacement

CAUTION: Installation of the modified lower arm bushing will affect the road noise and the riding comfort in a negative way. Therefore, only use this modified part for a customer vehicle with consideration of these adverse effects.

9. Remove the front lower control arms (both sides) according to the on-line instructions on MS3 or the Workshop Manual (section 02-13 FRONT LOWER ARM REMOVAL/INSTALLATION).

10. Remove the front lower arm bushing using SSTs 49 G030 797 and 49 B025 004.

11. Place the SSTs on the front lower control arm as shown below, then press out the bushing.

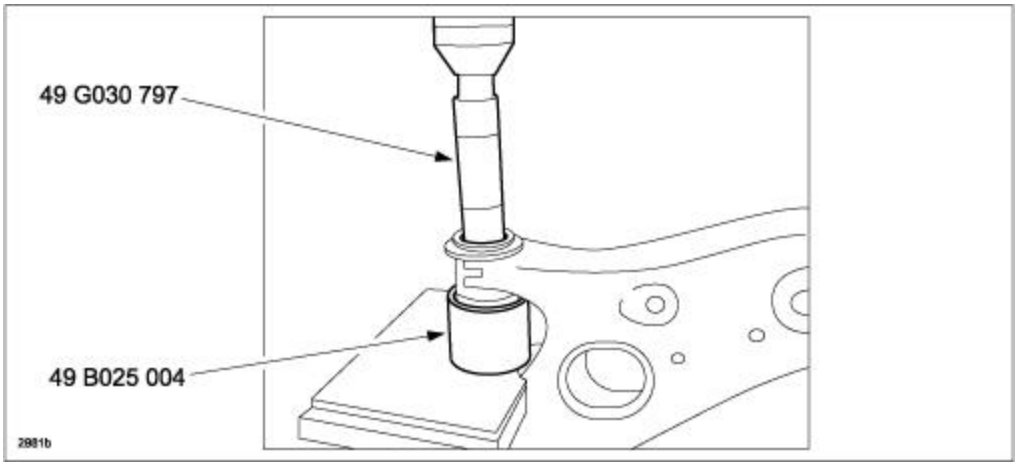

© 2017 Mazda Motor of America, Inc.

12. Install the modified bushing using the same SSTs.

NOTE:

- Before installing the new bushing, wipe the inside of the outer tube and make sure it is clean.
- Apply soap suds to the bushing to ease the installation.
- Always wipe off soap suds from the front lower control arm and bushing with a cloth.
- Install the bushing so the projection (A) is pointing toward the front of the vehicle.

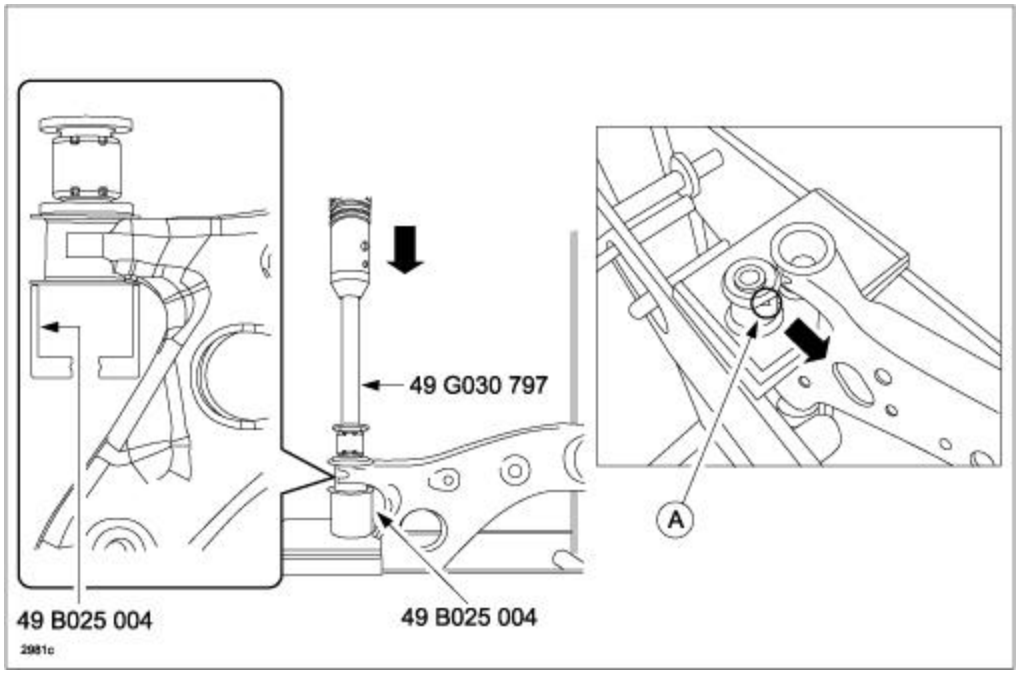

CAUTION: Make sure the bushing has been properly inserted by verifying that the bushing tab **IS FULLY EXPANDED**, as shown in the illustration to the left (A). The illustration to the right (B) shows an example of a bushing tab that **IS NOT FULLY EXPANDED**.

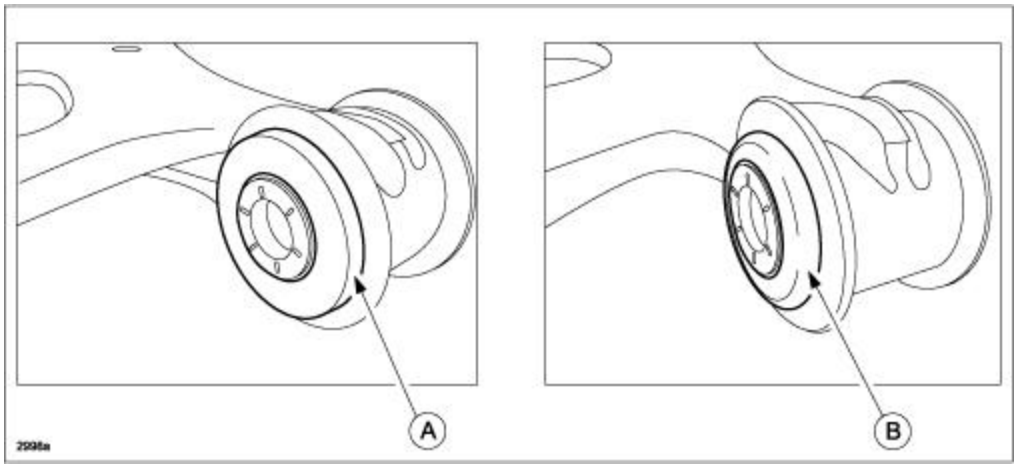

© 2017 Mazda Motor of America, Inc.

13. After installing the bushing, verify the distance between the front lower control arm (A) and front lower control arm bushing inner pipe (B) equals 5.8 +/- 0.8mm as shown below.

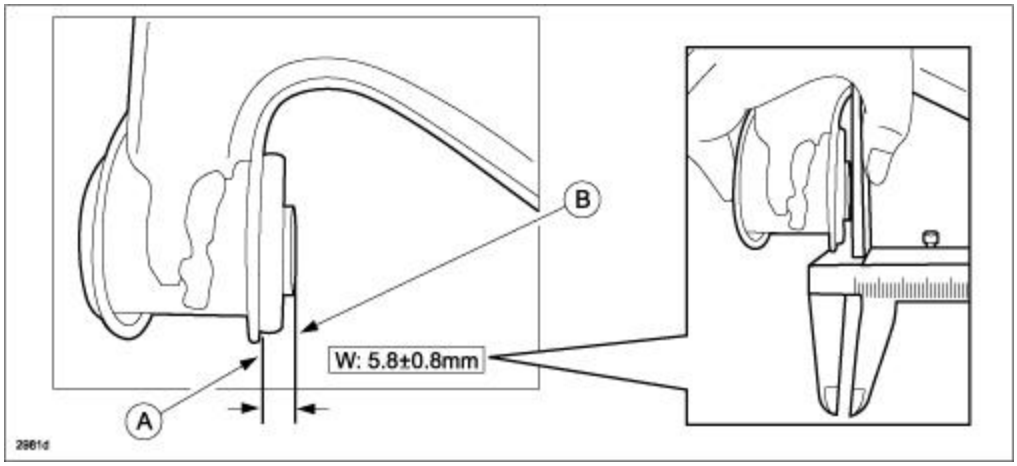

14. Reinstall the front lower control arm according to the on-line instructions on MS3 or the Workshop Manual (section 02-13 FRONT LOWER ARM REMOVAL/INSTALLATION).

NOTE: For the joint sections with rubber bushings, raise the vehicle using a lift, and then temporarily tighten the installation bolts. Then raise the vehicle using a wheel alignment lift rack (A) or lower the vehicle to the ground (to load the suspension). Use a torque wrench (B) to tighten the bolts (C) to the specified tightening torque.

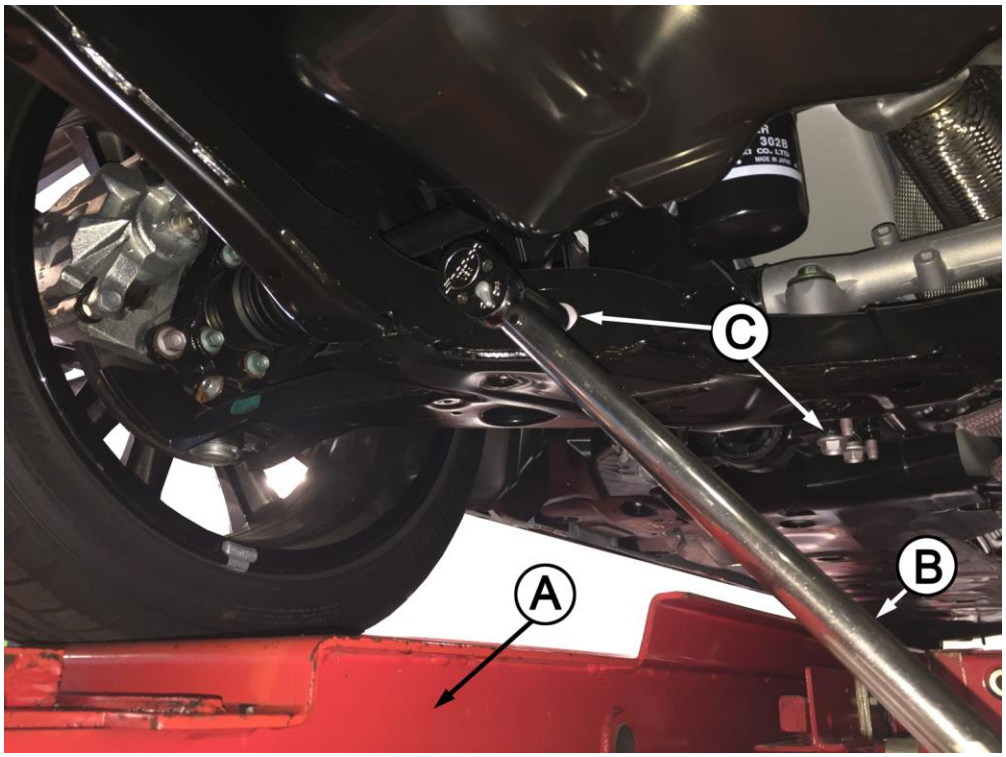

15. Perform wheel alignment inspection and adjust if necessary.

© 2017 Mazda Motor of America, Inc.

PARTS INFORMATION

New Part Number	Old Part Number	Description	Qty.	Notes
B45A-34-111A	B45A-34-111	Stopper, Bump	2	For Japan built 2.0L B4YA-34-111 (Service Part) can also be used.
B45G-34-111A	B45G-34-111	Stopper, Bump	2	For Japan built 2.5L B4YG-34-111 (Service Part) can also be used.
KDY5-34-081	--	Protector	2	All models
9YB0-41-237	--	Piston Rod Nut	2	All models
TK48-34-470	KD35-34-470E KDY5-34-470A	Front Lower Arm Bushing	2	

NOTE:

- For Mexico-built vehicles that are originally equipped with the Bump Stopper (BJS7-34-111), use B45A-34-111A for the repair.
- For Mexico-built vehicles that are originally equipped with the Front Rubber Bushing (BSJ7-34-470), use TK48-34-470 for repair.

© 2017 Mazda Motor of America, Inc.

WARRANTY INFORMATION

Since two different causal parts (front shock absorber and lower arm) are involved in this repair, please submit the claim divided into the following two claims.

NOTE:

- This warranty information applies only to verified customer complaints on vehicles eligible for warranty repair.
- This repair will be covered under Mazda's New Vehicle Limited Warranty term.
- Additional diagnostic time cannot be claimed for this repair.

Front Shock Absorber

- Vehicle Type A: Install Protector and Replace Bump Stopper
- Vehicle Type B: Replace Bump Stopper

Warranty Type	A			
Symptom Code	82			
Damage Code	97			
Part Number Main Cause	B4YA-34-111, B4YG-34-111, B45A-34-111A or B45G-34-111A			
Quantity	2			
Operation Number / Labor Hours	XXK8NFRX / 0.6 Hrs.			
Related Part and Quantity	9YB0-41-237	Piston Rod Nut	2	Vehicle Type A and B
	KDY5-34-081	Protector	2	Vehicle Type A only

Front Lower Arm

- Vehicle Type A, B and C: Replace Lower Arm Bushing

	Dealer Sublets Wheel Alignment	Dealer Performs Wheel Alignment
Warranty Type	A	
Symptom Code	82	
Damage Code	93	
Part Number Main Cause	TK48-34-470 (Lower Arm Bushing)	
Quantity	2	
Operation Number / Labor Hours	XXK8NARX / 0.8 Hrs. (Only replacement of front lower arm bushing)	XXK8NBRX / 1.8 Hrs. (Includes front wheel alignment check and adjust using 4-wheel alignment tester)
Sublet Code	Z9	---