TECHNICAL BULLETIN
Q562NAS1
02 FEB 2016

© Jaguar Land Rover North America, LLC
NOTE: The information in Technical Bulletins is intended for use by trained, professional Technicians with the knowledge, tools, and equipment required to do the job properly and safely. It informs these Technicians of conditions that may occur on some vehicles, or provides information that could assist in proper vehicle service. The procedures should not be performed by 'do-it-yourselfers'. If you are not a Retailer, do not assume that a condition described affects your vehicle. Contact an authorized Land Rover service facility to determine whether this bulletin applies to a specific vehicle.

SECTION: 501-19

Service Action: Towing Eye Cover

AFFECTED VEHICLE RANGE:

LR4 (LA)
Model Year: 2015-2016
VIN: 758690-782009
Assembly Plant: Solihull

MARKETS:

NAS

CONDITION SUMMARY:

Situation: An issue has been identified on a limited number of vehicles within the Affected Vehicle Range where the front towing eye cover may not remain in place.

Action: Retailers are required to **HOLD** only affected new vehicles that are within your control and refrain from releasing the vehicles for **new vehicle sale** pending completion of the Service Instruction detailed in this Technical Bulletin. Unsold vehicles should have this performed as part of the Pre-Delivery Inspection (PDI) process but **must** have it completed prior to vehicle handover to the customer. Affected vehicles already in the hands of customers should be updated at the next available opportunity.

PARTS:

NOTE: when ordering parts, order only the expected percentage demand of parts identified.

Description	Part Number	Qty.	EXPECTED % of VEHICLES REQUIRING PARTS
Towing eye cover - Dark Techno Silver	LR084190	1	100
Towing eye cover - White Silver	LR084189	1	100
Towing eye cover - Anthracite	LR084187	1	100

SPECIAL TOOLS:

Refer to Workshop Manual/Service Instruction for any required tools.

WARRANTY:

NOTE: check DDW to ensure that a vehicle is affected by this program prior to undertaking any rework action.

At the time of confirming a booking for vehicle repair, ensure that all outstanding Recalls and Service Actions are identified to ensure the correct parts are available and adequate workshop time is allocated for repairs to be completed at one visit.

Warranty claims must be submitted quoting Program Code **'Q562'** together with the relevant Option Code from the table. SRO and parts information is included for information only. The Option Code(s) that allows for the drive in / drive out allowance can only be claimed if the vehicle is brought back into the workshop for this action alone to be undertaken.

This program is valid for a limited time only. Warranty claims with a repair date prior to the **31 January 2018** closure date must be submitted or payment within 30 calendar days of completion of the repair.

Repair procedures are under constant review and therefore times / prices are subject to change; those quoted here must be taken as guidance only. Refer to TOPIx to obtain the latest repair time.

PROGRAM CODE	OPTION CODE	DESCRIPTION	SRO	TIME (HOURS)	PARTS/SUNDRY CODE	QTY./VALUE

PROGRAM CODE	OPTION CODE	DESCRIPTION	SRO	TIME (HOURS)	PARTS/SUNDRY CODE	QTY./VALUE
Q562	B	Check the front towing eye cover - install a new towing eye cover - Dark Techno Silver	76.22.44	0.10	LR084190	1
Q562	C	Check the front towing eye cover - Install a new towing eye cover - Dark Techno Silver Drive in/drive out	76.22.44 02.02.02	0.10 0.20	LR084190 -	1 -
Q562	D	Check the front towing eye cover - Install a new towing eye cover - White Silver	76.22.44	0.10	LR084189	1
Q562	E	Check the front towing eye cover - Install a new towing eye cover - White Silver Drive in/drive out	76.22.44 02.02.02	0.10 0.20	LR084189 -	1 -
Q562	F	Check the front towing eye cover - Install a new towing eye cover - Anthracite	76.22.44	0.10	LR084187	1
Q562	G	Check the front towing eye cover - Install a new towing eye cover - Anthracite Drive in/drive out	76.22.44 02.02.02	0.10 0.20	LR084187 -	1 -

Normal Warranty policies and procedures apply.

SERVICE INSTRUCTION:

1. Release the four front towing eye cover fixings.

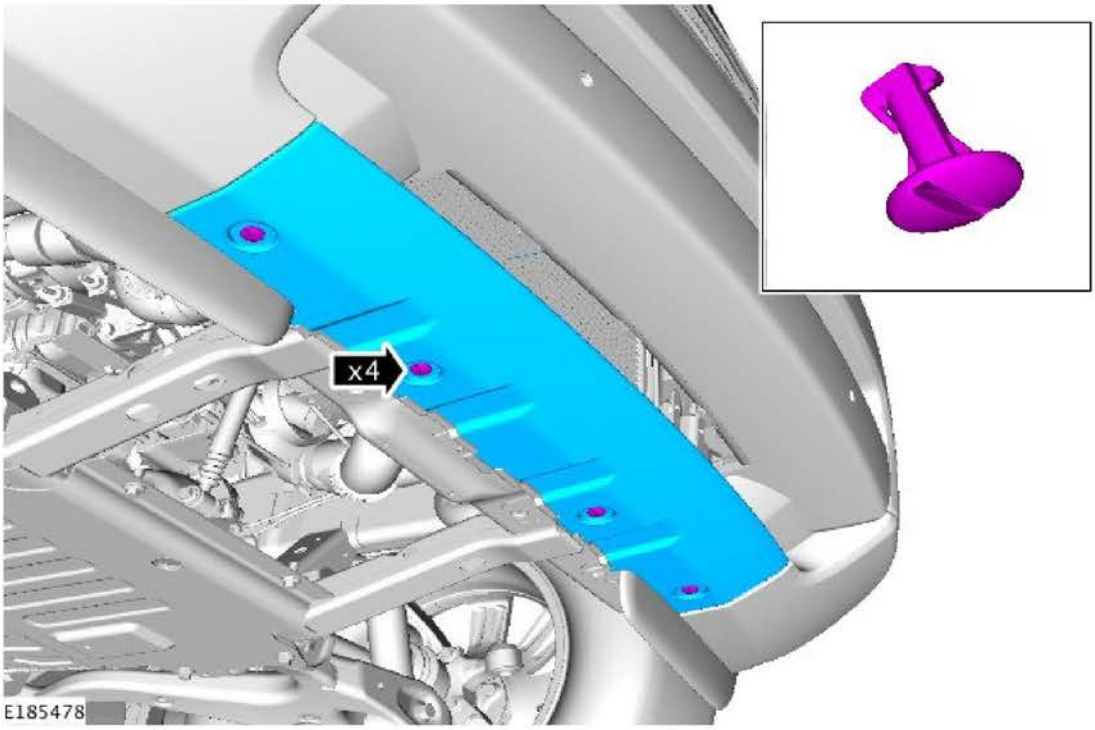

2. Remove and discard the front towing eye cover.

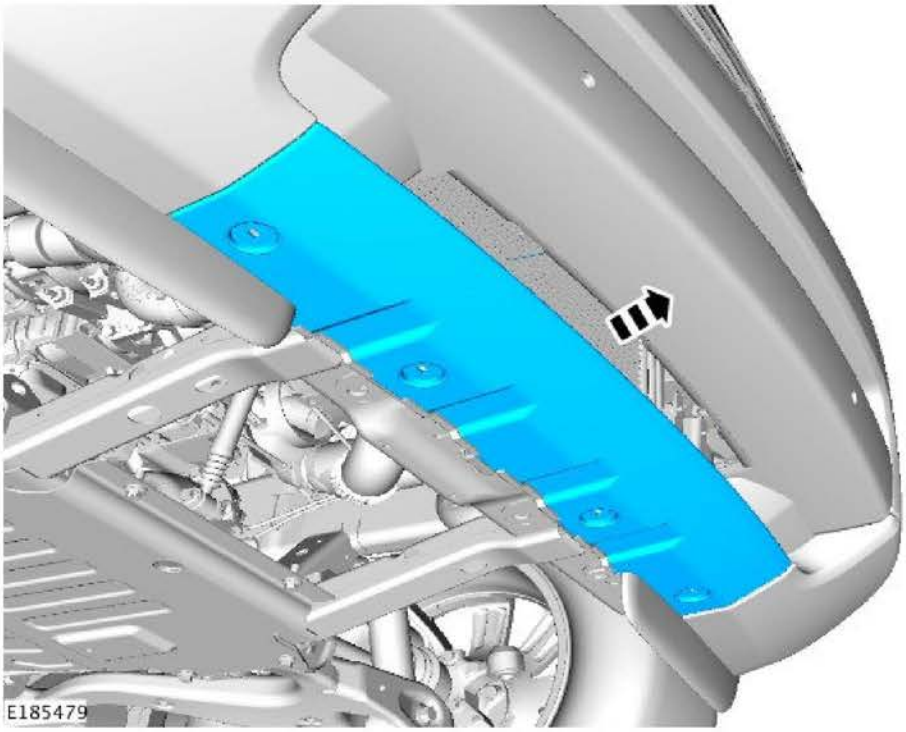

3. Install the new front towing eye cover.

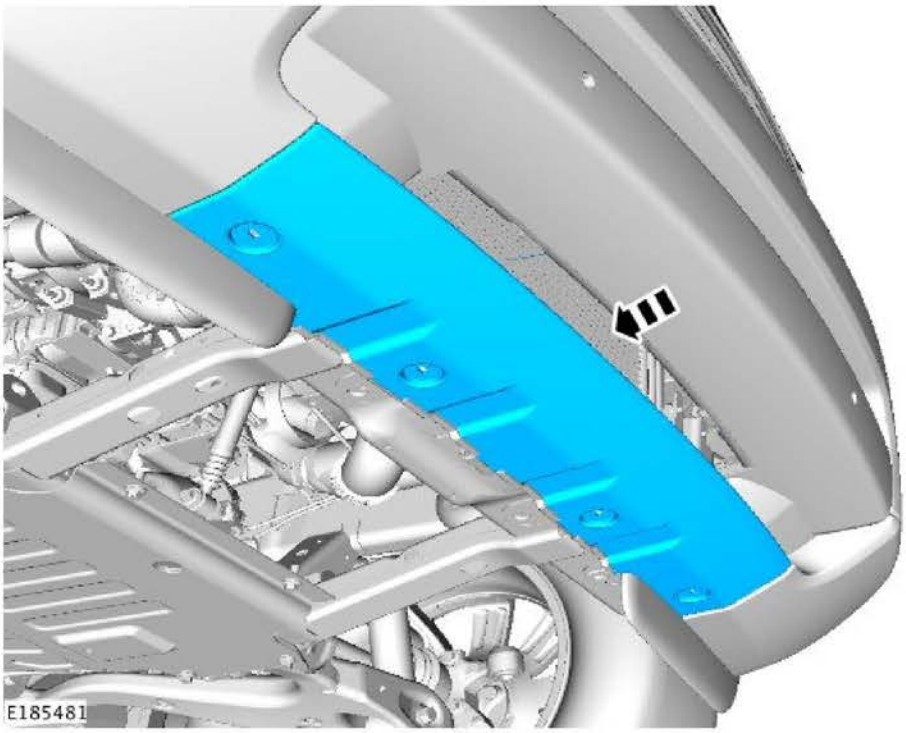
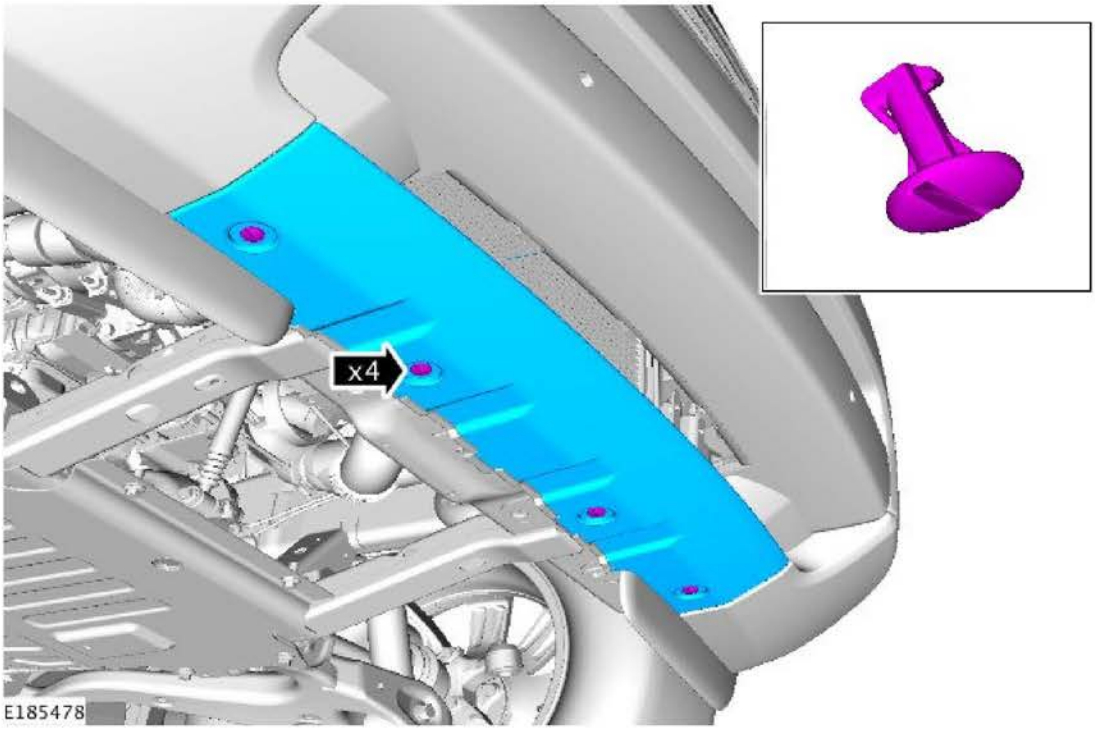
4. Install the four fixings.