# TECHNICAL BULLETIN
LTB00891NAS1
08 FEB 2016

© Jaguar Land Rover North America, LLC
NOTE: The information in Technical Bulletins is intended for use by trained, professional Technicians with the knowledge, tools, and equipment required to do the job properly and safely. It informs these Technicians of conditions that may occur on some vehicles, or provides information that could assist in proper vehicle service. The procedures should not be performed by 'do-it-yourselfers'. If you are not a Retailer, do not assume that a condition described affects your vehicle. Contact an authorized Land Rover service facility to determine whether this bulletin applies to a specific vehicle.

## SECTION: 501-08

Roof Opening Panel Rear Glass Seal Loose

## AFFECTED VEHICLE RANGE:

**Range Rover Sport (LW)**
**Model Year:** 2014 Onwards
**VIN:** 001154 Onwards
**Assembly Plant:** Solihull
**With:** Roof Opening Panel

**Range Rover (LG)**
**Model Year:** 2013 Onwards
**VIN:** 001204 Onwards
**Assembly Plant:** Solihull
**With:** Roof Opening Panel

## MARKETS:

NAS

## CONDITION SUMMARY:

**Situation:** The roof opening panel rear glass seal may be loose / adrift.

**Cause:** This may be caused by the seal becoming degraded.

**Action:** Should a customer express this concern, follow the Service Instruction below.

## PARTS:

LR084562 Rear Glass Roof Panel Seal Quantity: 1

## TOOLS:

Refer to Workshop Manual for any required special tools.

## WARRANTY:

**NOTE: Repair procedures are under constant review, and therefore times are subject to change; those quoted here must be taken as guidance only. Always refer to TOPIx to obtain the latest repair time.**

**NOTE: DDW requires the use of causal part numbers. Labor only claims must show the causal part number with a quantity of zero.**

| DESCRIPTION | SRO | TIME (HOURS) | CONDITION CODE | CAUSAL PART |
|---|---|---|---|---|
| Rear Glass Roof Panel Seal - Renew | **76.81.89.41** | 0.3 | 07 | LR038285 |

**NOTE: Normal Warranty procedures apply.**

## SERVICE INSTRUCTION:

1. **NOTE: Range Rover Sport (L494) shown; Range Rover (L405) similar.**

**Component location.**

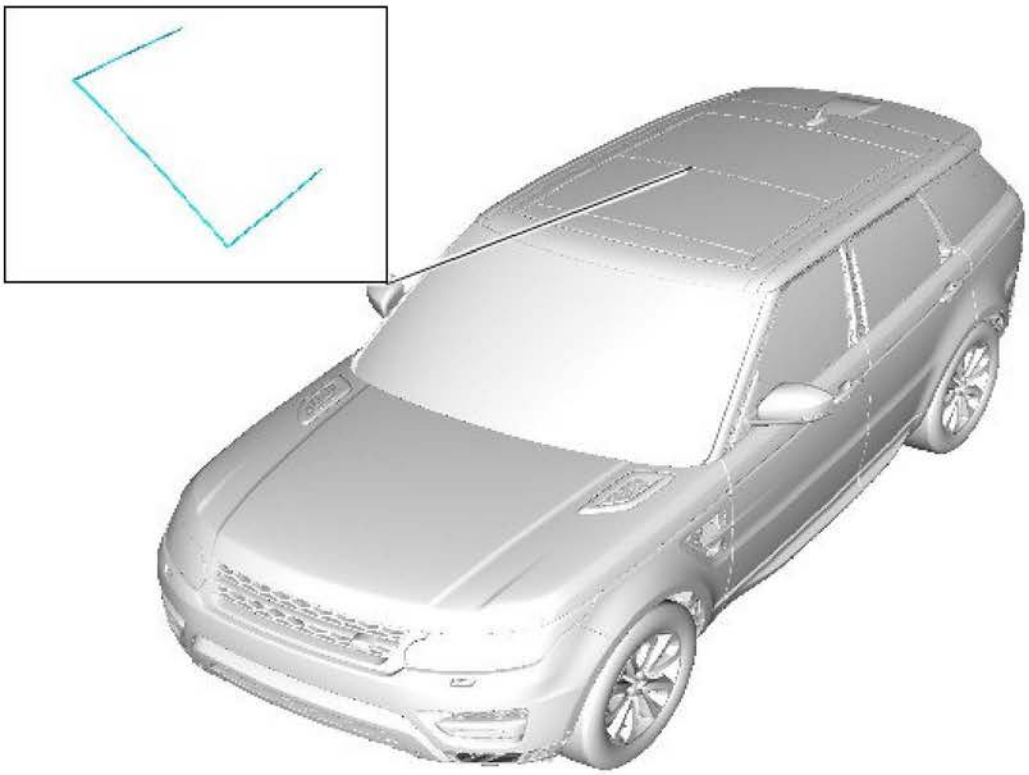

E186000

2. **NOTE: repeat this step on both sides of the vehicle.**

   Remove the roof mouldings (see TOPIx Workshop Manual, section 501-08: Exterior Trim and Ornamentation).

3. Open the roof opening panel to the vent position.

4. **NOTE: note the orientation of the rear glass roof panel seal when removing from the vehicle.**

   Remove the roof opening panel rear glass seal.

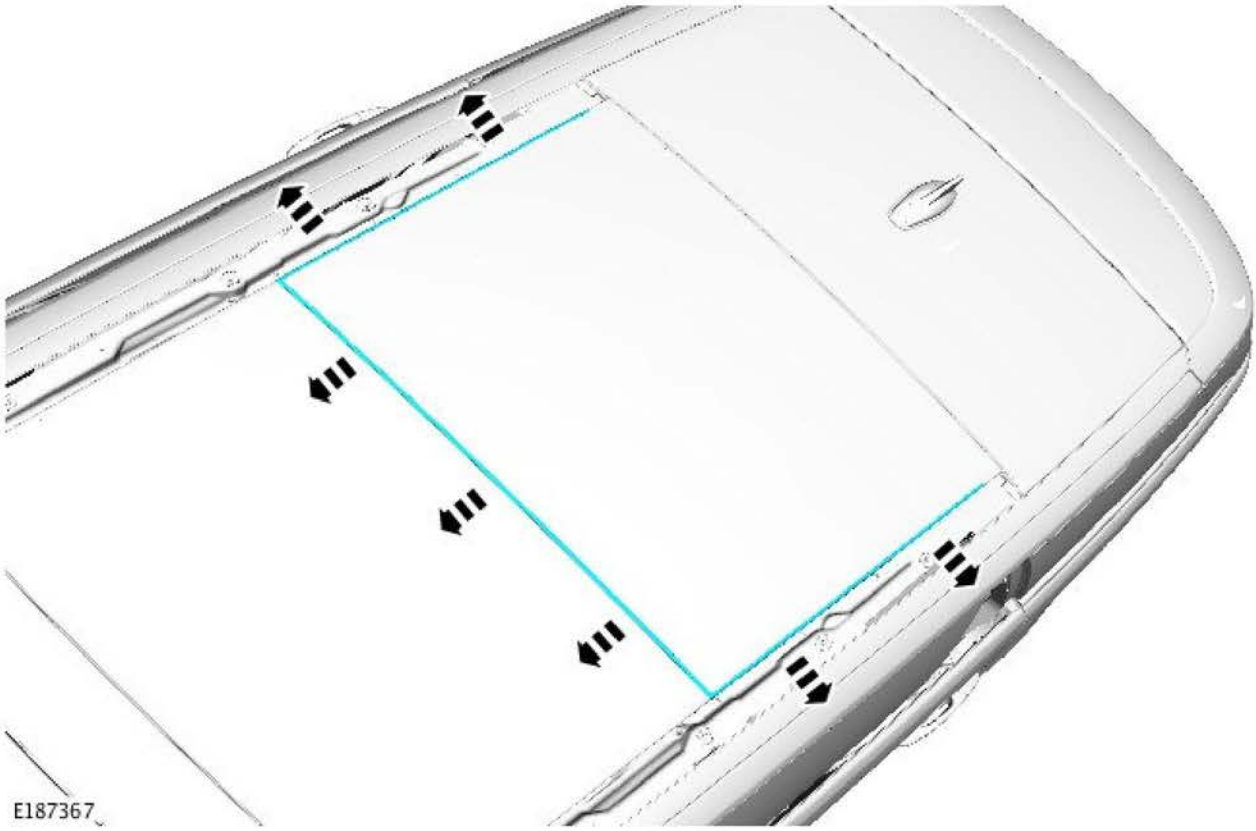


**5.** Use a suitable cloth to wipe clean the area shown.

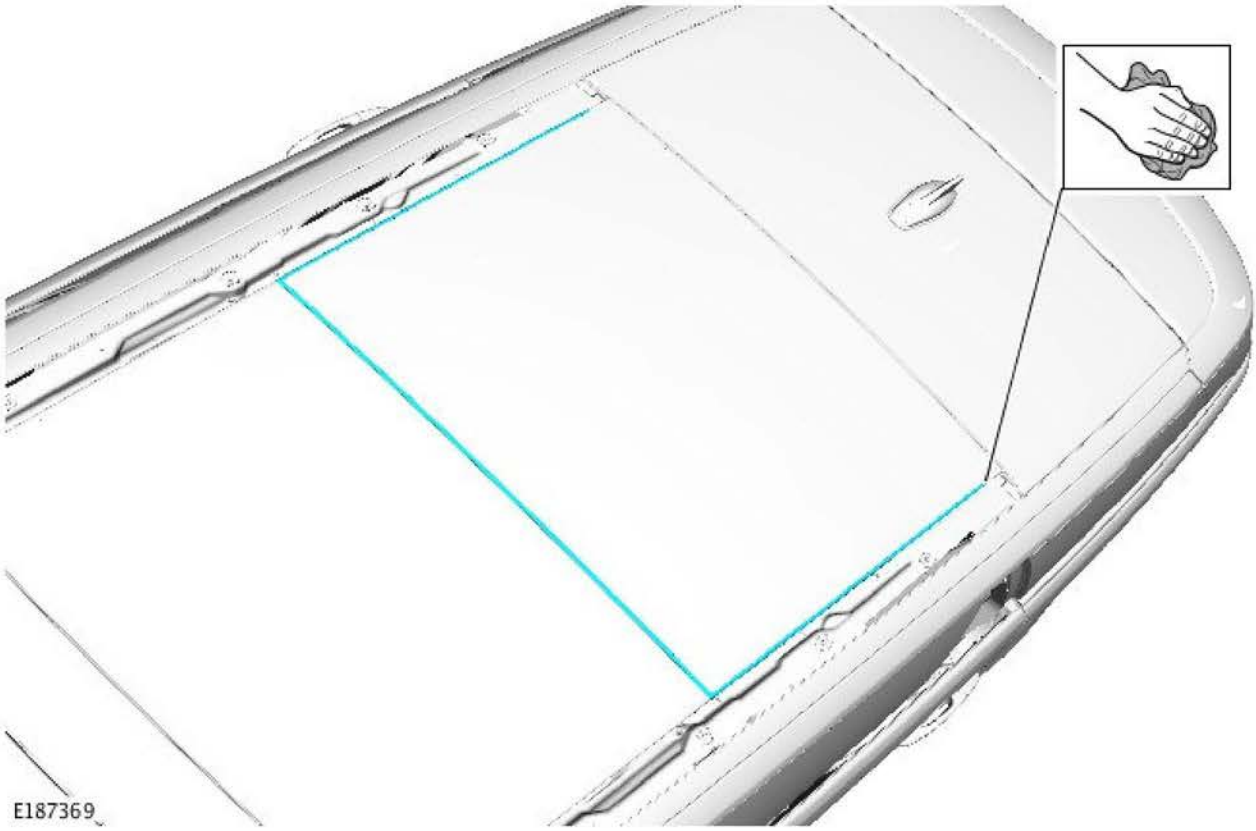


**6.** Use a suitable solution (2ml mild soap per 1 liter of water), wet the area shown.

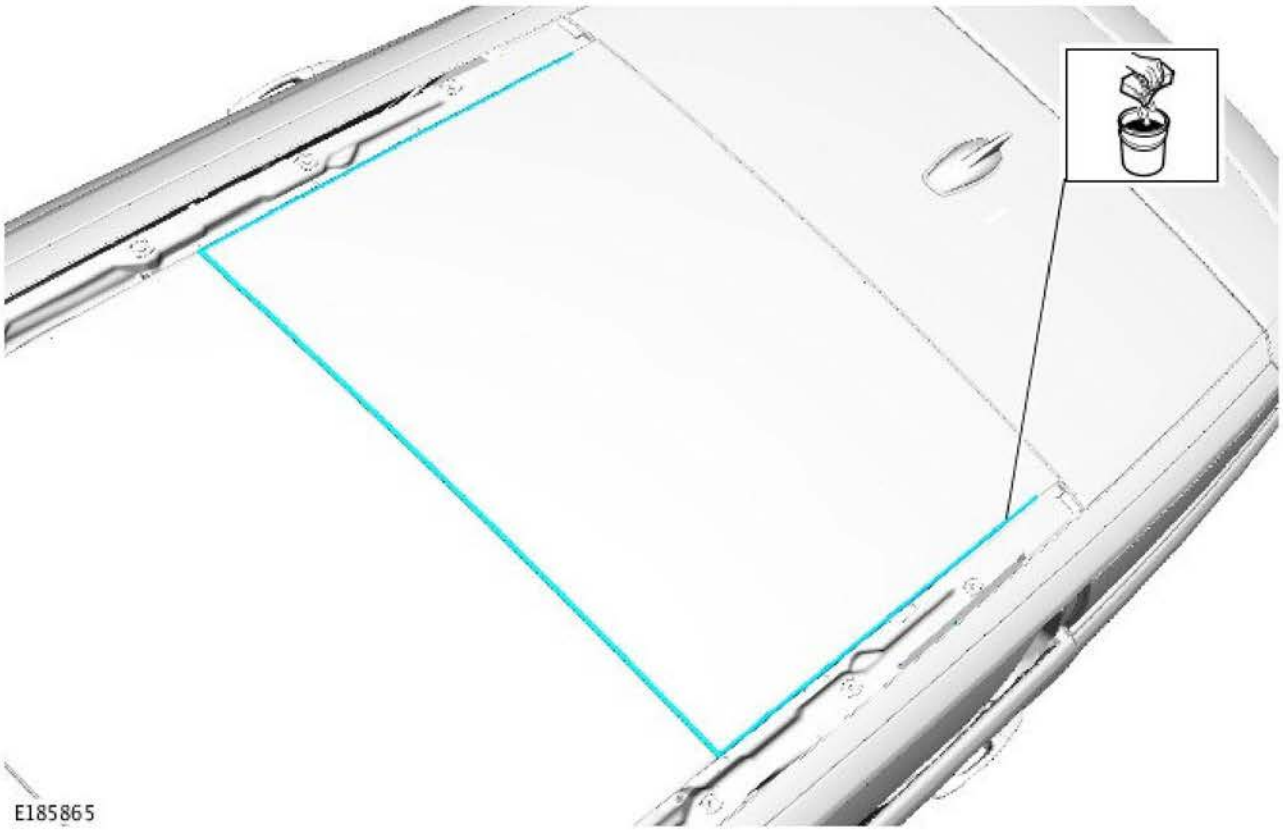


7. **CAUTION: make sure the roof opening panel rear glass seal is correctly installed and fully located.**

**NOTE: make sure the seal is installed in the correct orientation.**

Install the new roof opening panel rear glass seal.

1. Make sure the end and the corners of the roof opening panel rear glass seal are installed first.
2. Install the roof opening panel rear glass seal in the order shown.

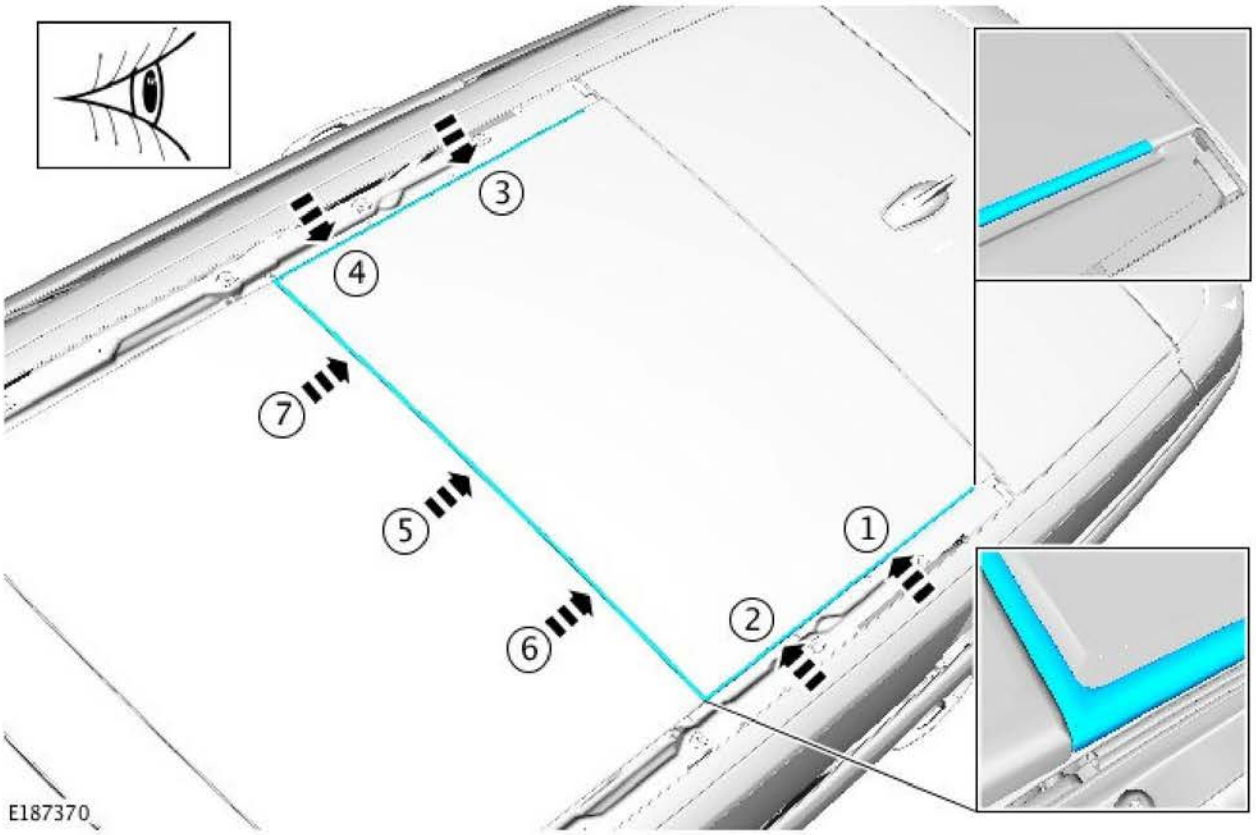


**8.** **NOTE: repeat this step on both sides of the vehicle.**

Install the roof moulding (see TOPIx Workshop Manual section 501-08: Exterior Trim and Ornamentation).

**9.** Close the roof opening panel.