Technical Service Bulletin

42 Rear shock mounting noises

42 16 31 2042645/3 April 7, 2016. Supersedes Technical Service Bulletin Group 42 number 16-29 dated January 21, 2016 for reasons listed below.

Model(s)	Year	VIN Range	Vehicle-Specific Equipment
S3	2015	116968 - 999999	Audi magnetic ride
S3	2016	All	Audi magnetic ride

Condition

REVISION HISTORY		
Revision	**Date**	**Purpose**
3	-	Revised header data (Updated factory codes)
2	01/21/2016	Revised header data (Updated customer codes)
1	12/04/2015	Initial publication

- Customer may report hearing rumbling noises from the rear of the vehicle when driving on very uneven roads or over potholes.
- This bulletin only applies to S3 vehicles with Audi magnetic ride.

Technical Background

The rear shock mounts are causing the noises (Figure 1).

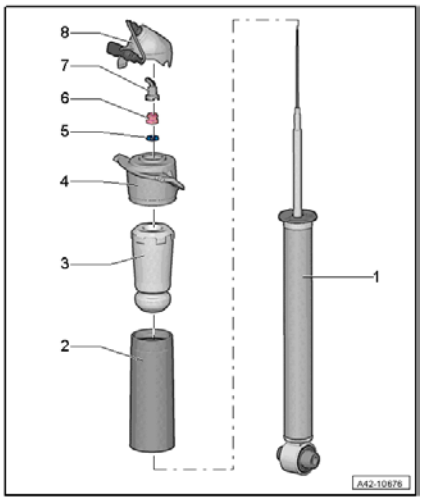

Figure 1. *Rear shock absorber assembly showing rear shock mount (point 4).*

© 2016 Audi of America, Inc.
All rights reserved. Information contained in this document is based on the latest information available at the time of printing and is subject to the copyright and other intellectual property rights of Audi of America, Inc., its affiliated companies and its licensors. All rights are reserved to make changes at any time without notice. No part of this document may be reproduced, stored in a retrieval system, or transmitted in any form or by any means, electronic, mechanical, photocopying, recording, or otherwise, nor may these materials be modified or reposted to other sites, without the prior expressed written permission of the publisher.

Production Solution

Not applicable.

Service

1. Verify that the noise is coming from the rear shock mounts.
2. Remove both rear shock assemblies and replace both rear shock mounts according to Elsa instructions.
3. Test drive to verify repair.

Warranty

Claim Type:	Use applicable claim type. If vehicle is outside any warranty, this Technical Service Bulletin is informational only.		
Service Number:	4295		
Damage Code:	0020		
Labor Operations:	2 shock absorbers remove+reinstall	4293 2000	180 TU
	Remove and install 2 rear shock mounts	4295 2099	30 TU
	Battery charge	2706 8950	Time stated on diagnostic protocol (Max 10 TU)
Diagnostic Time:	GFF – Suspension: Adapt the control position	0150 0000	Time stated on diagnostic protocol (Max 30 TU)
	Road test prior to service procedure	0121 0002	10 TU
	Road test after service procedure	0121 0004	10 TU
	Technical diagnosis at dealer's discretion (Refer to Section 2.2.1.2 and Audi Warranty Online for DADP allowance details)		
Claim Comment:	As per TSB #2042645/3		

All warranty claims submitted for payment must be in accordance with the *Audi Warranty Policies and Procedures Manual*. Claims are subject to review or audit by Audi Warranty.

© 2016 Audi of America, Inc.
All rights reserved. Information contained in this document is based on the latest information available at the time of printing and is subject to the copyright and other intellectual property rights of Audi of America, Inc., its affiliated companies and its licensors. All rights are reserved to make changes at any time without notice. No part of this document may be reproduced, stored in a retrieval system, or transmitted in any form or by any means, electronic, mechanical, photocopying, recording, or otherwise, nor may these materials be modified or reposted to other sites, without the prior expressed written permission of the publisher.

Required Parts and Tools

Part Number	Part Description	Quantity
8V0 513 353	Shock absorber mounting	2
N 10628301	Bolt, hex. hd. with shoulder M12 x 1,5 x 90	2
N 90648402	Bolt, hex. hd. (combi.) M10 x 35	4

Additional Information

All parts and service references provided in this TSB (2042645) are subject to change and/or removal. Always check with your Parts Department and service manuals for the latest information.

© 2016 Audi of America, Inc.
All rights reserved. Information contained in this document is based on the latest information available at the time of printing and is subject to the copyright and other intellectual property rights of Audi of America, Inc., its affiliated companies and its licensors. All rights are reserved to make changes at any time without notice. No part of this document may be reproduced, stored in a retrieval system, or transmitted in any form or by any means, electronic, mechanical, photocopying, recording, or otherwise, nor may these materials be modified or reposted to other sites, without the prior expressed written permission of the publisher.