T-SB-0092-16

August 1, 2016

TOYOTA
Technical Service Bulletin

D/C Cut Fuse Installation During PDS

Service Category General

Section Pre-Delivery Service **Market** USA

Toyota Supports ASE Certification

Applicability

YEAR(S)	MODEL(S)	ADDITIONAL INFORMATION
2017	Mirai	

Introduction

The D/C Cut Fuse (30A) has been removed at the assembly plant to reduce parasitic current draw in transit and storage. The D/C Cut Fuse (30A) is stored in the blank space of the relay block in the engine compartment and must be reinstalled in the original location during PDS (Pre-Delivery Service).

© 2016 Toyota Motor Sales, USA

TOYOTA

D/C Cut Fuse Installation During PDS

Installation procedure

Remove the D/C Cut Fuse (30A) from the blank space of the relay block in the engine compartment and install it in the relay block as shown.

Figure 1

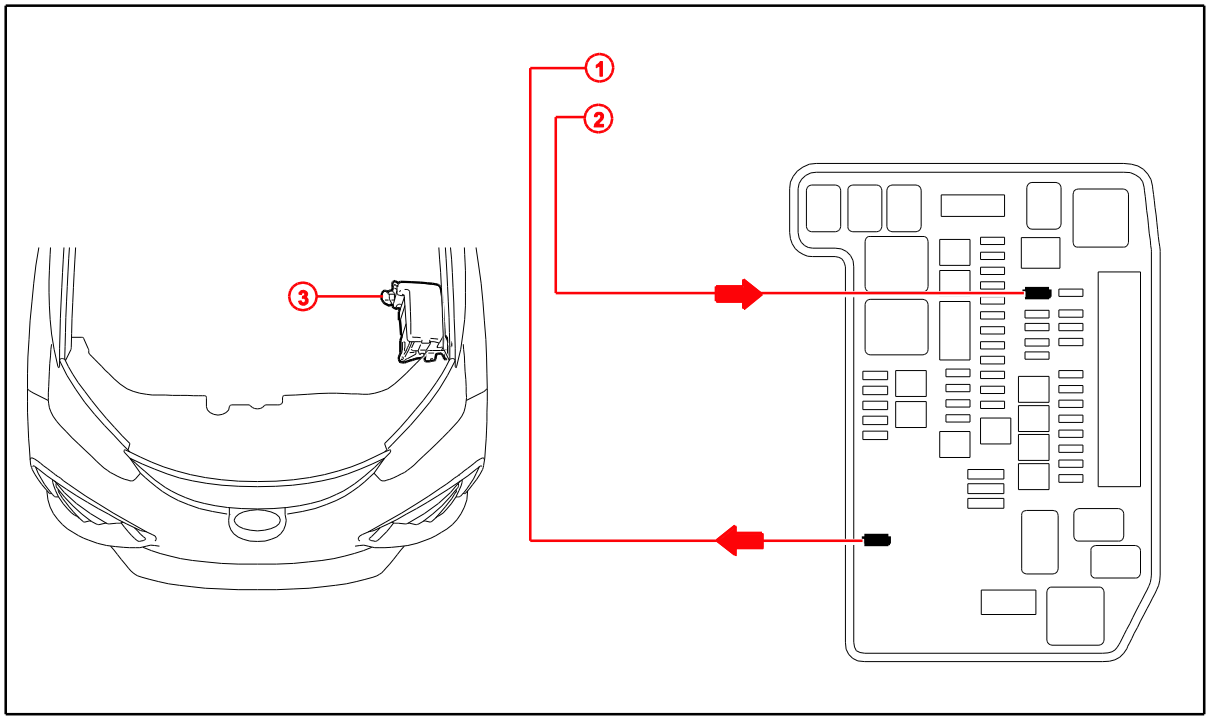

1	Remove This D/C Cut Fuse (30A)
2	Install D/C Cut Fuse (30A) Here (Original Location)

3	Main Relay Block

© 2016 Toyota Motor Sales, USA