NOVA BUS

SERVICE BULLETIN BS3531ER3

REFERENCE:	Nova Bus Manuals
SECTION:	10: Transmission and Control
RS Nº:	MQR 7621-842
EFFECTIVE IN PROD.:	N/A

APPLICATION DEADLINE: 2017SE01
CLAIM REFERENCE NUMBER: WB-3531

SUBJECT:	Transmission cooling pipes
JUSTIFICATION:	Failure of p-clamps on the transmission cooling pipes may force the pipe to come in contact with starter solenoid terminal.

LEVEL	DESCRIPTION	DIRECT CHARGES		TIME
		LABOUR	MATERIAL	
1	Installation of retrofit kit to achieve proper support and orientation of the clamp.	Nova Bus	Nova Bus	4 hrs
2	–	–	–	–

MATERIAL

QTY	PART Nº	REV.	DESCRIPTION	REPLACES PART N°
LEVEL 1				
1	N80450	–	SUPPORT PIPE OIL COOLER ASSY	–
2	N31320-09	–	SUPPORT CLAMP LOOP TYPE 2.0"	–
1	N95060-157	–	HOSE SILICONE 4PLY 2.25" X 13"	–
1	N95060-12	–	HOSE WATER 2.0" I.D. x 4.0" Lg	–
1	N82871	–	PIPE INLET PF10 B500 COOLER	–
2	N22781-05	–	CLAMP BREEZE 1 3/4" to 2 5/8" DIA.	–
2	10561546	–	CLAMP BREEZE 2 1/4" to 3 1/8" DIA.	–
2	N11121	–	BOLT M8x30 YP GR8.8 DIN933	–
2	N44888	–	NUT LOCKNYL M8 FL YP C8	–
2	N17905	–	WASHER LOCK CURV M8 YP DIN 128A	–
2	N32102	–	SCREW M8X25 FL YP CL8.8 D6921	–
LEVEL 2				
–	–	–	–	–

Materials will be available within 42 days. To order, please contact Prevost Parts by phone at 1-800-771-6682, by fax at 1-888-668-2555 or by email at prevostparts.commandes@volvo.com. Specify document number, quantity of parts required and shipping address.

DISPOSAL OF PARTS

REMOVED PARTS ARE:	DISCARDED *	RETAINED	* Dispose of the unused parts and the defective parts in accordance with local environmental standards in effect.
	Yes	–	

REVISION HISTORY

REV.	DATE	CHANGE DESCRIPTION	WRITTEN BY
NR	2016MA05	Initial release	Kumaraswamy K S
R1	2016JN17	Revised the Client List	Kumaraswamy K S
R2	2016JL07	Revision in the procedure lines	Kumaraswamy K S
R3	2016AU16	Removed L952 from Client list	Kumaraswamy K S

APPROVED BY: Daniel Theriault

Digitally signed by Daniel Theriault
DN: cn=Daniel Theriault, o=Nova Bus, ou, email=daniel.theriault@volvo.com, c=CA
Date: 2016.08.24 16:57:25 -04'00'

Symbol	Meaning
Empty Field	No changes, the procedure applies
+	Contract added, the procedure applies
–	Contract removed, the procedure does not apply

	CLIENT	ORDER	ROAD NUMBER		VIN (2NVY/4RKY...)		QTY
			FROM	TO	FROM	TO	
	CT Transit - Connecticut	L554	1041	1065	S92U1A4000139	S92U0A4000164	25
–	Houston - Texas	L952	1580	1580	S92J5G9775318	S92J5G9775318	1
	Niagara Parks Commission - Ontario	L685	—	—	S92U9C3000644	S92U8C3000652	9
	Saskatoon - Saskatchewan	L568	—	—	S92U9B3000013	S92U9B3000013	1
	Toronto Transit Commission - TTC - Ontario	L729	9000	9000	S92U9D3000905	S92U9D3000905	1

WARNING

Follow your internal safety procedures.

PROCEDURE

1.1. Park the vehicle on an even surface with transmission in neutral (N) and apply the parking brake.

1.2. Set the Master control switch in the STOP position (see Figure 1).

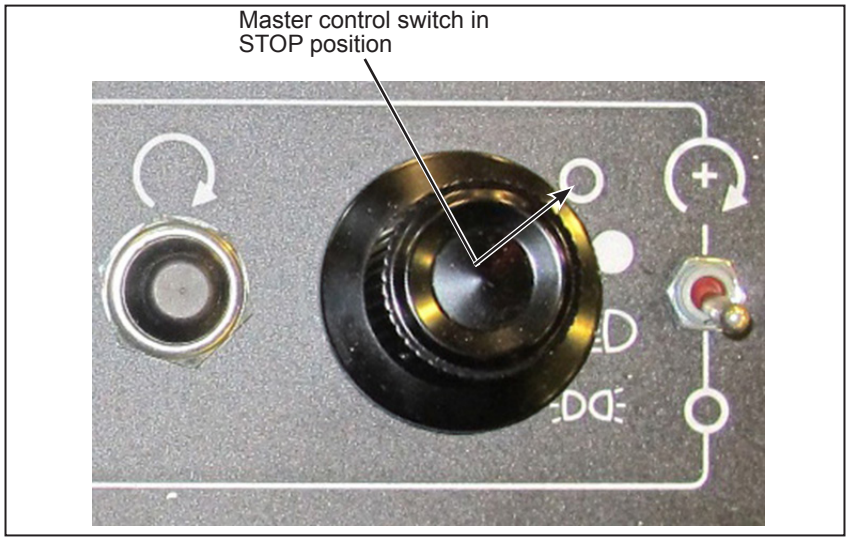

Figure 1 - Master Control Switch in STOP Position

WARNING

Before starting any work on the vehicle, make sure the vehicle is completely and securely stationary. Disconnect the starting circuit on the control box at the rear of the vehicle and place the battery disconnect switches in the off position.

1.3. Disconnect the battery ground cable. Insulate the terminals to avoid accidental grounding.

1.4. Make sure that supports have been placed in the proper locations under the vehicle and raise the vehicle.

1.5. Open the vehicle side access door (see Figure 2).

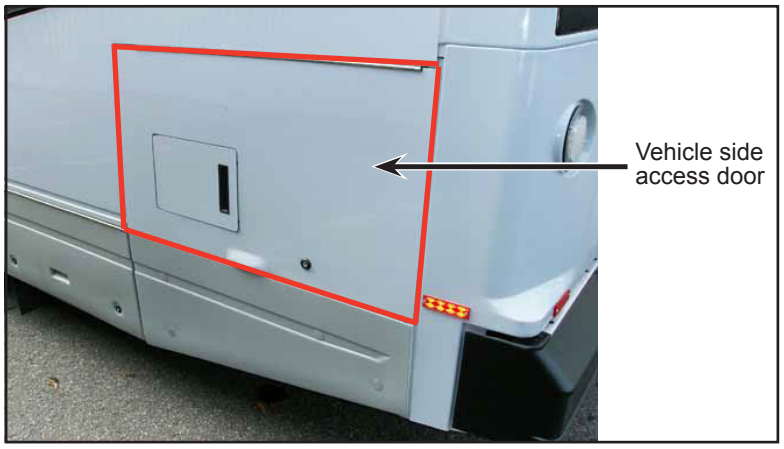

Figure 2 - Typical View of Side Access Door

1.6. Remove and retain the two-seat access from the rear five-seat, and transmission access panel with the hardware (see Figure 3).

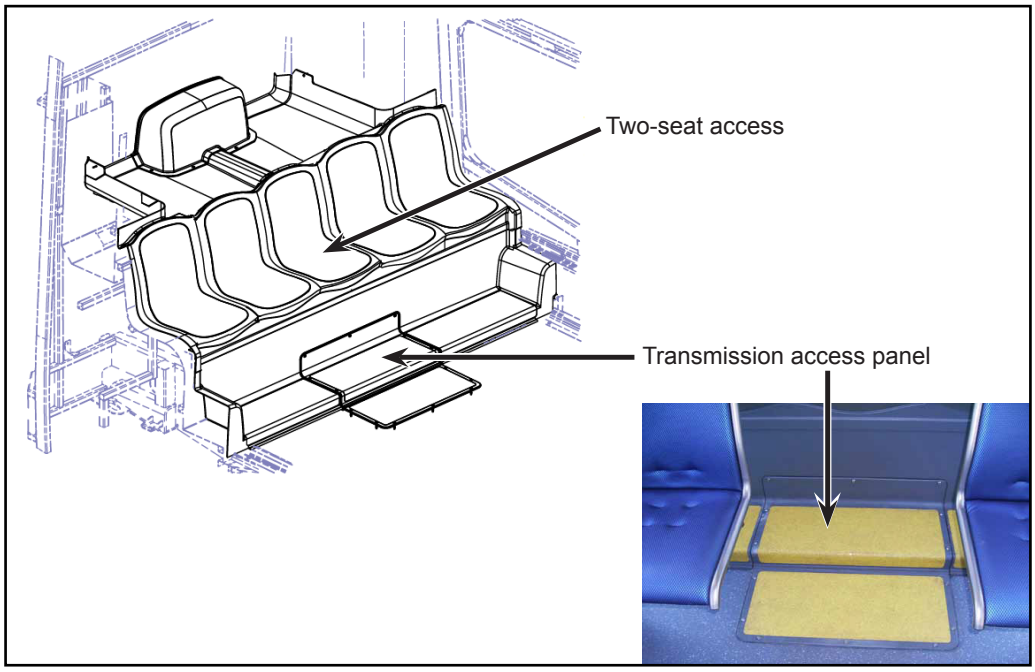

Figure 3 - Typical View of Two-seat Access Panel and Transmission Access Panel

CAUTION

VEHICLE HOISTING. Follow your internal safety procedure, and use appropriate safety equipment for your protection.

See section 18: HOISTING AND TOWING in this manual regarding lifting and towing procedures before raising or lowering the vehicle.

1.7. Remove the radiator pressure cap to vent the cooling system (see Figure 4).

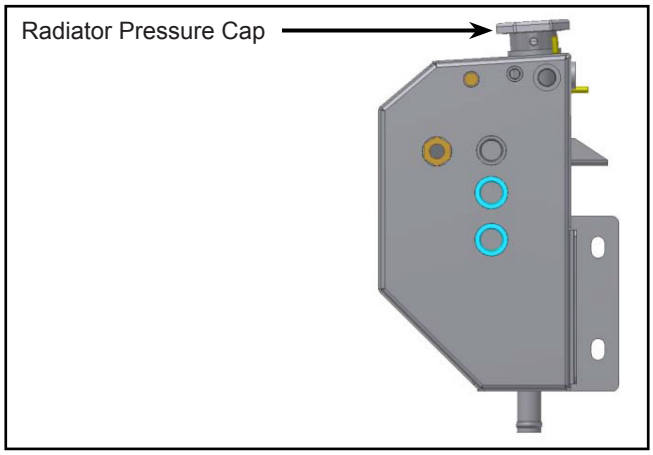

Figure 4 - Typical Location of Radiator Pressure Cap

CAUTION

Wait until the temperature is below 120°F (50°C) before removing the radiator pressure cap. Failure to do so can cause personal injury from heated coolant spray.

1.8. Close the two heater stop valves in the engine compartment.

1.9. Remove the drain plug on transmission outlet hose (see Figure 5) and let the fluid drain in an appropriate container.

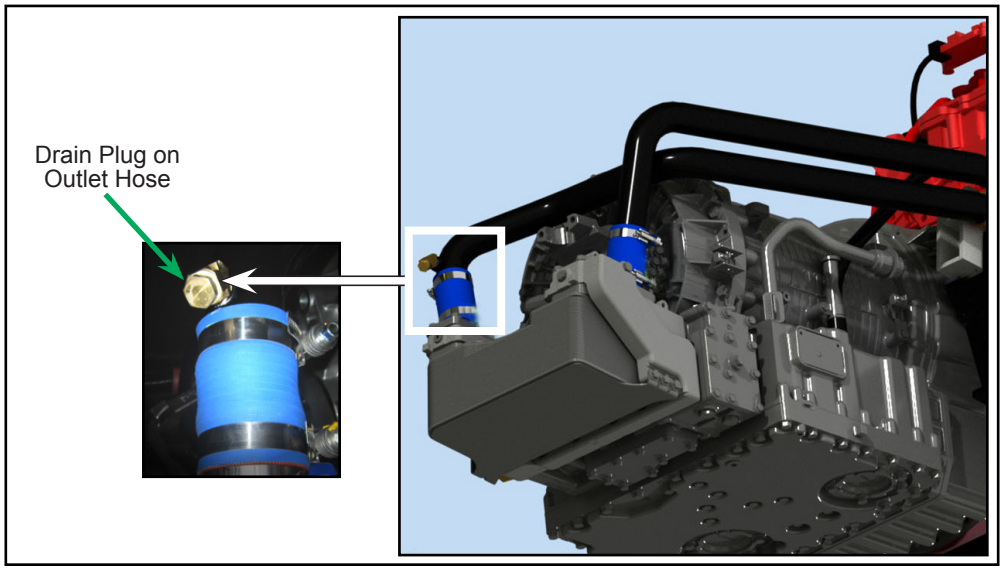

Figure 5 - Draining Point for Transmission

1.10. Connect a hose equipped with a fitting and a valve to the quick-connect filling fitting of the cooling system (see Figure 6). Make sure the valve on the hose is closed before connecting the hose. Open the valve on the hose and let the coolant drain into an appropriate container.

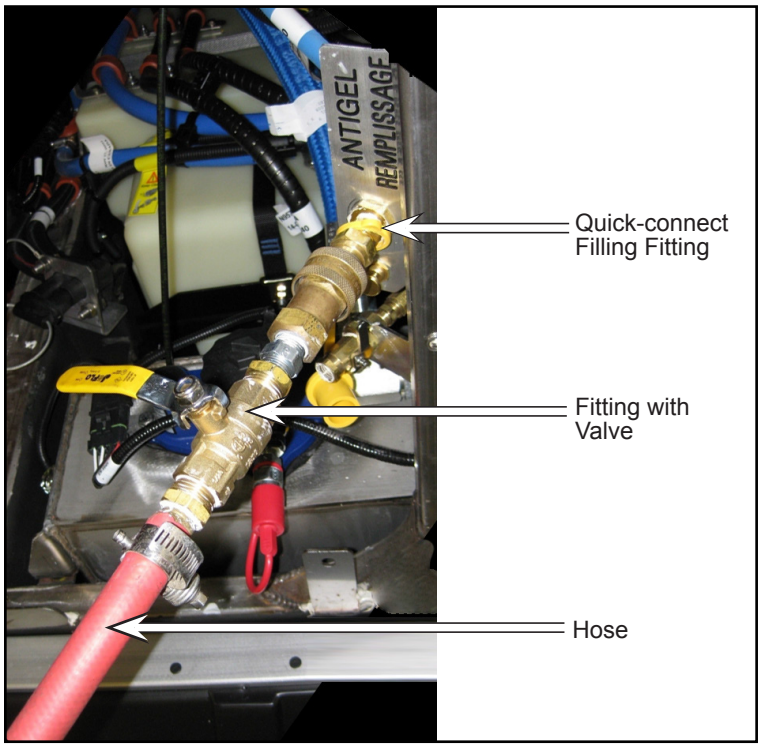

Figure 6 - Typical Location of Quick-connect Filling Fitting

NOTE

See section 09-302.06: ENGINE COOLING PACKAGE for exact information on draining the cooling system.

1.11. Locate the transmission cooling pipes.

1.12. Remove and discard the existing clamps, hoses, pipe inlet and support (see Figure 7).

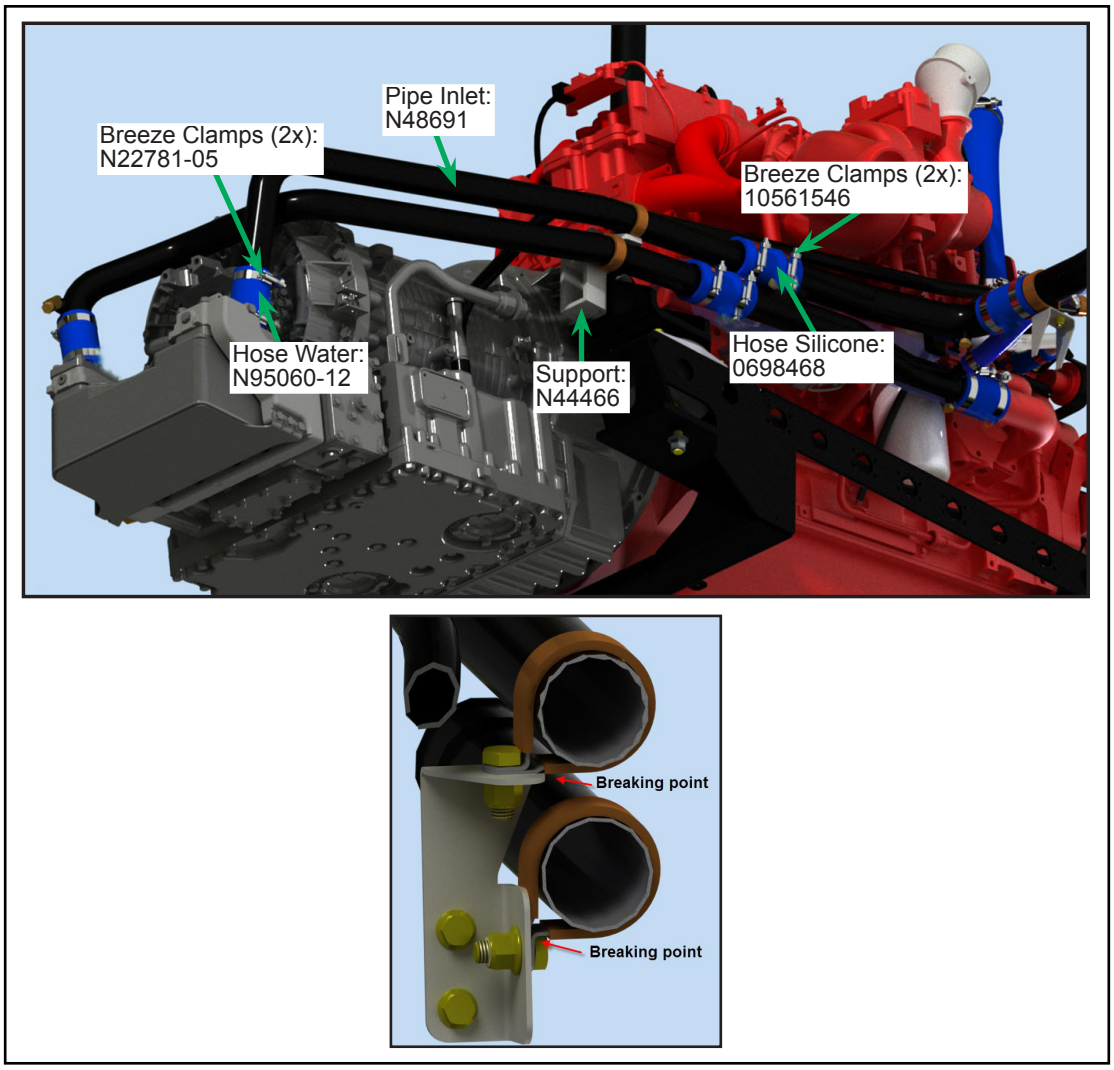

Figure 7 - Typical View of Transmission Cooling Pipes and its Accessories

1.13. Remove and discard the locknuts, washers, bolts and screws.

1.14. Install the new support (N80450) with screws (N32102) and lock washers (N17905) (see Figure 8).

1.15. Install the hoses (N95060-12) with breeze clamps onto the cooling pipe line (N82871) and secure the lines to the support with the new clamps (N31320-09) and tighten them using locknuts (N44888) and screws (N11121). Tighten to specified torque (see Figure 8).

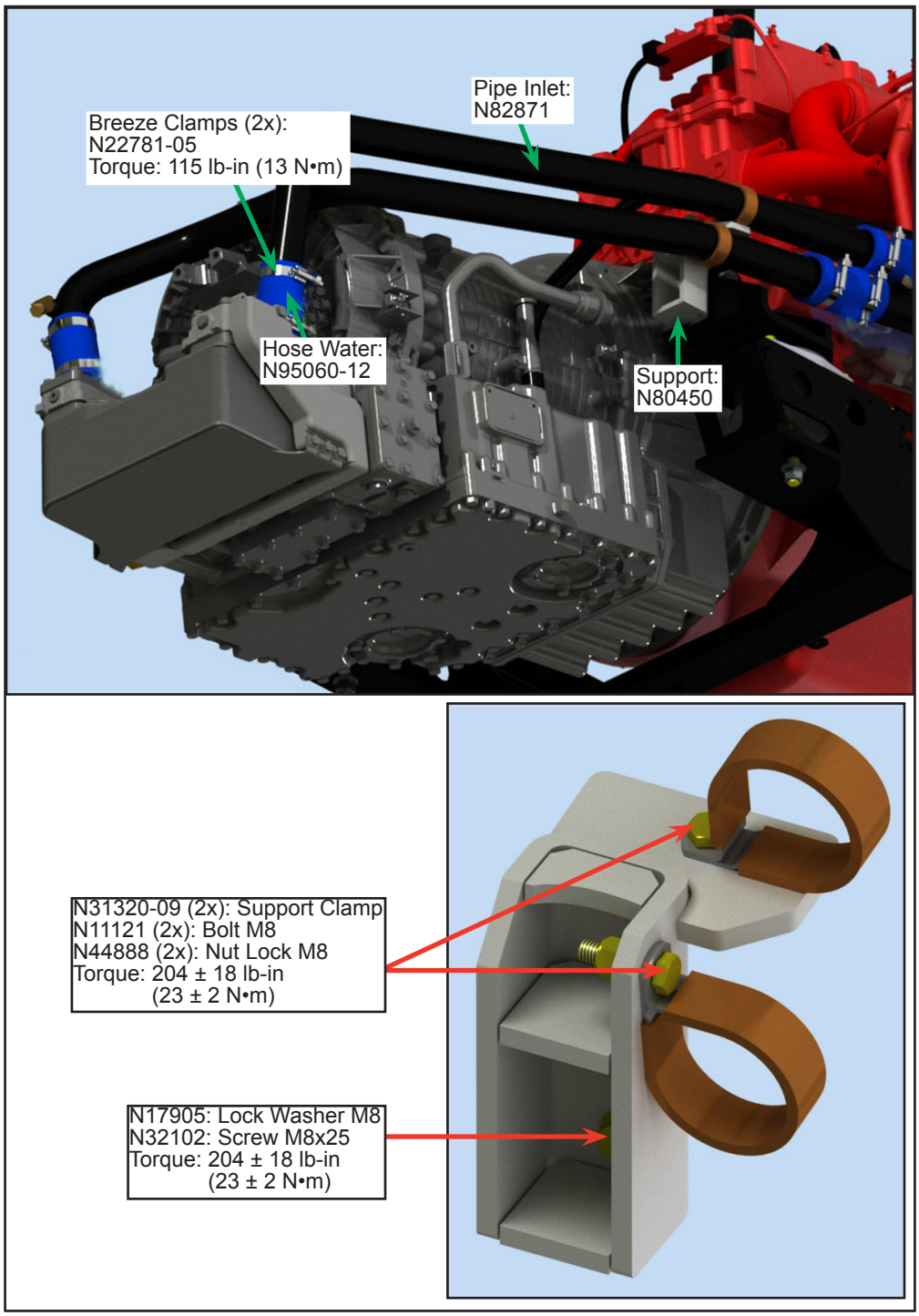

Figure 8 - Typical View of Transmission Cooling Pipes and its Accessories

1.16. Install the breeze clamps (10561546) and hose (N95060-157). Tighten the clamps to specified torque (see Figure 9).

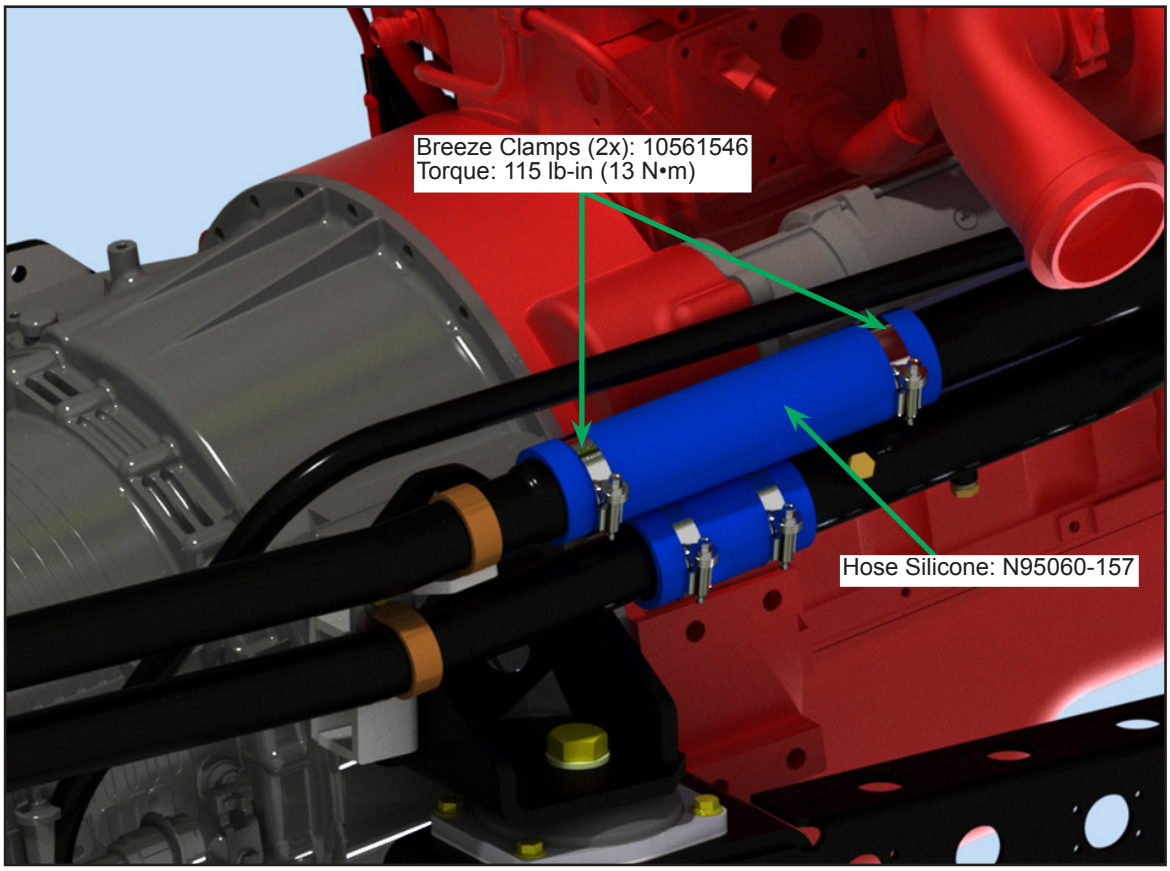

Figure 9 - Installation of Hose Silicone and Breeze Clamps

1.17. Check the quality of cooling fluid. Tighten the drain plug of transmission.

CAUTION

Before topping up or filling the cooling system, it is very important that the following conditions are met to ensure environmental safety and proper system operation:

- **The engine must be shut down and cold.**
- **The heating system drain valves (floor radiator valves and main drain valve, located at the front of the bus), must be closed. The valves of the supply lines must be open. See section 14: HEATING AND VENTILATION for the location of these components.**

Handling and disposal of used coolant can be subject to federal and local regulations. Use authorized waste disposal facilities. If in doubt, contact your local authorities for guidance as to the proper handling of used coolant.

Prolonged and repeated skin contact with used antifreeze can cause skin disorders or other injury.

1.18. Connect a hose equipped with a fitting and a valve to the quick-connect filling fitting of the cooling system, located in the engine compartment (see Figure 6). Make sure the valve on the hose is closed before connecting the hose. Use an electrical filling pump.

NOTE

Fill the coolant according to filling procedure of section 09-302.06: ENGINE COOLING PACKAGE of the Nova Bus Maintenance Manual.

CAUTION

To avoid pressure build-up in the tank, it is very important to keep the discharge valve knob pressed (or the pressure cap open) during the entire filling operation.

1.19. Connect the battery ground cable.

1.20. Place the Master control switch in ON position.

1.21. Lower the vehicle.

1.22. Start the engine and let it run at idle for 3 minutes to make the cooling fluid circulate within the system. Meanwhile, press the air discharge valve knob so that the cooling circuit keeps filling.

1.23. Check the coolant level using the rear Actia gauge. Add coolant if needed.

1.24. Check for any leaks in the cooling pipelines.

1.25. Run the engine at 2200 RPM until the coolant temperature reaches 190 °F (88 °C), approximately 10 minutes. Then, let it run at this speed for another five minutes. Make sure the coolant temperature does not exceed 200 °F (93 °C).

1.26. Stop the engine. Remove the filling hose and replace the protective cover on the coolant fill port.

1.27. Close the surge tank pressure cap.

1.28. Install the transmission access panel with the retained hardware.

1.29. Install the two-place seat from the rear five-seat with the retained hardware.

1.30. Close the vehicle side access door.

1.31. Vehicle may be returned to service. ❖