VOLVO CAR
SERVICE AND PARTS BUSINESS

Technical Journal

TITLE:

I-TPMS Low tire pressure warning

REF NO:	ISSUING DEPARTMENT:	CAR MARKET:
TJ 29818	Technical Service	United States and Canada

PARTNER:	ISSUE DATE:	STATUS DATE:
3 US 7510 Volvo Car USA	2016-03-18	2016-03-24

FUNC GROUP:	FUNC DESC:	
7761	Pressure control	Page 1 of 15

"Right first time in Time"

Attachment

File Name	File Size
TJI-490092-1_1_0_en-US.pdf	2.1291 MB

Vehicle Type

Type	Eng	Eng Desc	Sales	Body	Gear	Steer	Model Year	Plant	Chassis range	Struc Week Range
124							2015-2016	21	0188517-9999999	201439-201616
134							2015-9999	21	0346497-9999999	201439-999952
134							2015-9999	22	0346169-9999999	201439-999952
136							2015-2016	21	0213266-9999999	201439-201616
137							2016-9999		0000001-9999999	201524-999952
138							2015-9999	36	0024847-9999999	201448-999952
155							2015-9999		0239301-9999999	201439-999952
156							2015-9999	22	0676154-9999999	201439-999952
157							2015-9999		0000001-9999999	201450-999952

CSC Customer Symptom Codes

Code	Description
21	Warning lights and chimes/Tire pressure monitoring, Low tire pressure warning

Produced in the USA and available as an electronic document. Hard copy documents are printed in USA on recycled paper containing a minimum of 50% wastepaper and 10% post-consumer waste.
© 2016 VOLVO CAR USA, LLC

VST Operation Number

VST Operation Number	Description
96364-2	Troubleshooting instrumentation: LI
98620-2	Only use when remove metal particle on encoder ring

DTC Diagnostic Trouble Codes

Control Module	Code	Fault Type
BCM	C007768	Intermittent

Rows beginning with * are modified
Note! If using a printed copy of this Technical Journal, first check for the latest online version.

Text

DESCRIPTION:
* This journal is re-written in its entirety.
I-TPMS=Indirect Tire Pressure Monitoring Sensors
DIM= Driver Information Module
DTC= Diagnostic Trouble Code
BCM= Brake control Module
VIDA= Vehicle Information and Diagnostics for Aftersales
ABS=Anti-lock Brake System
RCP=Recommended Cold Tire Pressure
AWD=All Wheel Drive

If the vehicle is equipped with (I-TPMS) (VDN codes: PU02, PU03, PU04), and there is a warning message in the DIM about Low tire pressure and DTC BCM-C007768, follow advice under Service.

I-TPMS use the rotational speed of the tires in combination with signal analysis of the ABS sensor signals to determine if tires are properly inflated.
For VIDA “Design and Function”, check VCC-ID: VCC-473572-1

SERVICE:
Check tire condition, tire pressure and initiate a I-TPMS calibration according to the following method:

1. First check tire condition and that there are no visible damages or screws / nails in the tire that are causing an air leak.
   Note: The maximum difference between the tires’ rolling circumference must not exceed 5%.
   Note: Defective or worn out tires should be replaced.
2. Locate the Tire label on the B-pillar and to check the recommended cold tire pressure (RCP) for the vehicle.
3. Using cold tires, check and if needed correct the tire pressure accordingly.
4. Download software BCM Upgrade if available, (new BCM software was released 2016w09.)
5. Initiate a TPMS calibration from the MY CAR menu and drive the car, the calibration is done in the background and take usually 12-15 minutes.

In case the driving cycle is shorter the calibration will restart at next driving cycle, there is no confirmation when it is completed.

6. I-TPMS needs to be calibrated after every time the tire pressure has been corrected or after shifting wheels.
   Note: In case the wheels are never shifted, then it is still advisable to calibrate TPMS system at least once every 15.000 km (10.000 miles) to allow TPMS compensate for the normal tire wear.

Note: the event DTC BCM-C007768 does not needs to be fault traced, it will self-erase after software download or when fault has been rectified.

If the TPMS Low tire pressure message continues after installing the latest BCM software:

For wheels including a wheel hub (not AWD rear wheel):

1. Remove the wheel and disconnect the wheel speed sensor from the knuckle.
2. Use a flashlight, look inside sensor hole to see if any metal particle is trapped on the wheel hub encoder ring (rotate the wheel to see all area of the encoder ring).
3. If a metal particle could be found on the wheel hub encoder ring, then disassemble components using the attached TJ instruction and clean the encoder ring of metal particles.
4. **The encoder ring does not need to be replaced.**
   Note: Do not use any metal instrument that can damage the magnetic encoder ring when removing eventual metal particles.

For AWD rear wheel:

1. Clean and check wheel speed sensor and tooth wheel on the rear drive shaft.
2. If problems cannot be solved, replace the concerned drive shaft since it could be a deviation with the tooth wheel.

VEHICLE REPORT:
Yes, please submit a Vehicle Report if the service solution described in this TJ has no effect. Use concern area “Vehicle Report” and sub concern area “Support not needed”, use function group 7761.

And for our quality follow up purposes, please also report all cases where:

- tire air valves are leaking due to improper installation in the rim (only original rim from factory).
- AWD drive shafts needs to be replaced.
- metal particles are found on the wheel hub encoder ring.

To view TJ attachment continue to next page. This TJ has one attachment.

Issue	Date	Reason
1	2015-12	First issue

Affected vehicles

Model year	Model
2011, 2012, 2013, 2014, 2015, 2016, 2017	S60 (11-)
2016, 2017	S60 Cross Country
2014, 2015, 2016, 2017	S60L
2007, 2008, 2009, 2010, 2011, 2012, 2013, 2014, 2015, 2016	S80 (07-)
2008, 2009, 2010, 2011, 2012, 2013, 2014, 2015	S80L
2011, 2012, 2013, 2014, 2015, 2016, 2017	V60
2015, 2016, 2017	V60 Cross Country
2008, 2009, 2010, 2011, 2012, 2013, 2014, 2015, 2016	V70 (08-)
2009, 2010, 2011, 2012, 2013, 2014, 2015, 2016, 2017	XC60
2008, 2009, 2010, 2011, 2012, 2013, 2014, 2015, 2016	XC70 (08-)

Materials

Materials	Qty.	Part No.	Notes
Flange screw	1.0	999251	Only XC60/70,S/V60 CC;
Flange lock nut	1.0	999475	Only S/V60,S80,V70;
Sems screw	1.0	30640878	ALL;
Flange screw	1.0	30741260	Only S/V60,S80,V70;

Special tools

Description	Part No.
Press tool	999 7251
Hydraulic hole cylinder	951 2923
Lever	999 7076
Press tool	999 7310

Orientation view

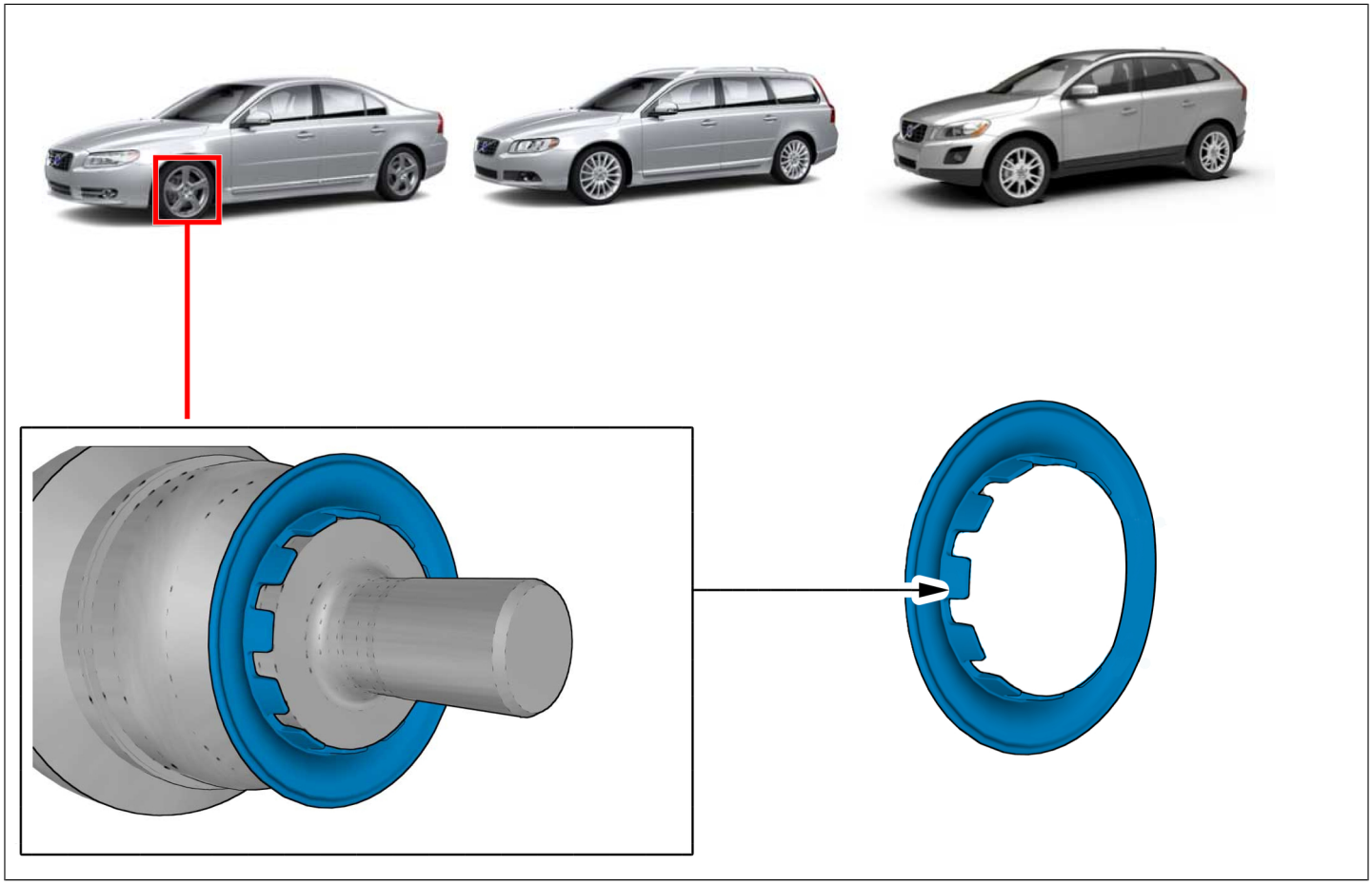

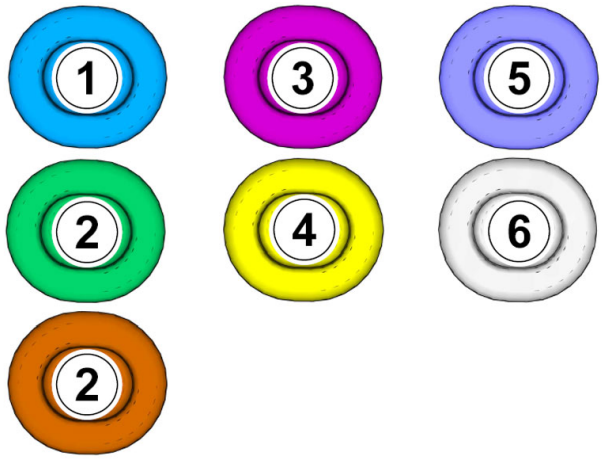

Note! This colour chart displays (in colour print and electronic version) the importance of the different colours used in the images of the method steps.

1 . Used for focused component, the component with which you will do something.
2 . Used as extra colors when you need to show or differentiate additional parts.
3 . Used for attachments that are to be removed/installed. May be screws, clips, connectors, etc.
4 . Used when the component is not fully removed from the vehicle but only hung to the side.
5 . Used for standard tools and special tools.
6 . Used as background color for vehicle components.

Removal

Remove relevant side front wheel , refer to:
Removal, replacement and installation
7 - Springs and wheels
77 - Wheels, tyres, hubs
771 - wheel and wheel trim

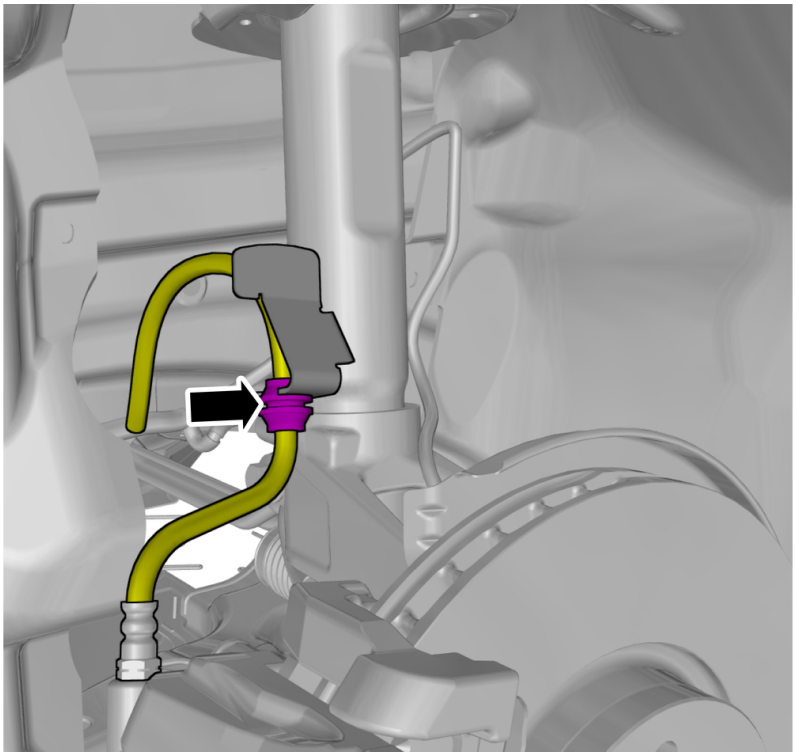

Fold marked part to one side.

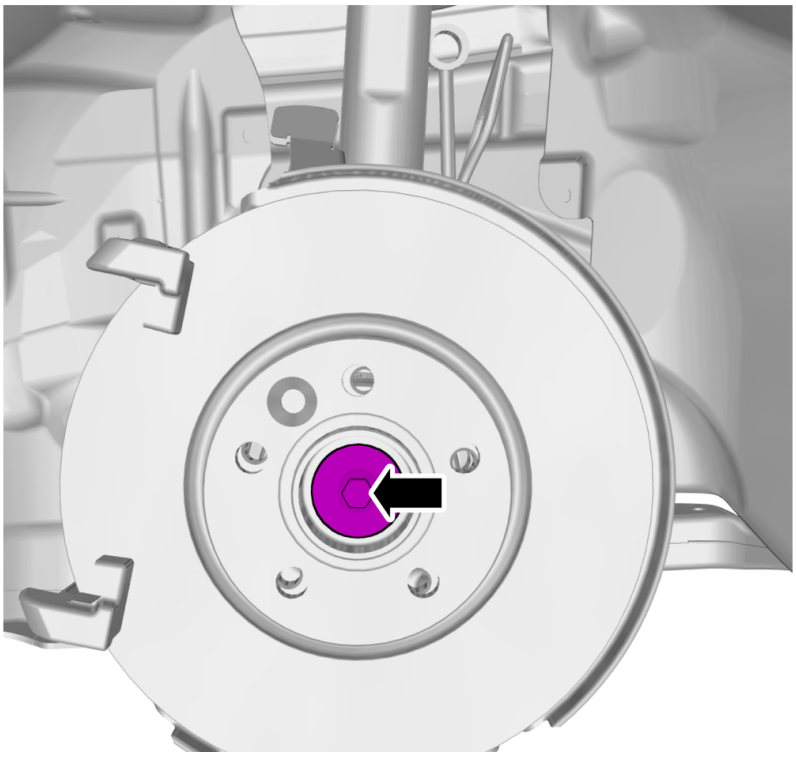

Caution! Make sure that a new bolt is installed.

Remove the screw.

Torque:

- Stage 1 : Driveshaft to wheel hub (front) , 35 Nm
- Stage 2 : Driveshaft to wheel hub (front) , 90°

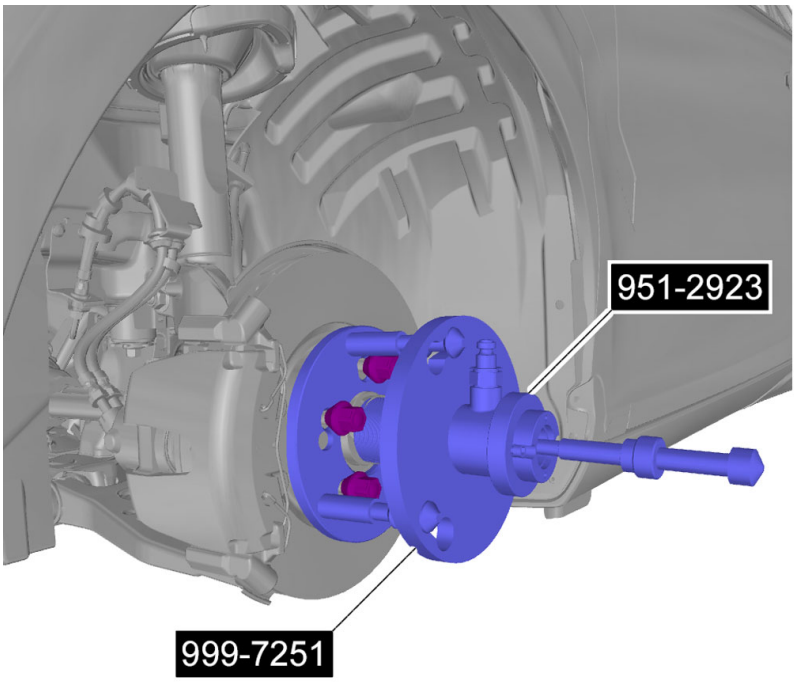

Special Tool: T9997251, Press tool

Special Tool: T9512923, Hydraulic hole cylinder

Concerns models XC60, XC70, V60CC, S60CC

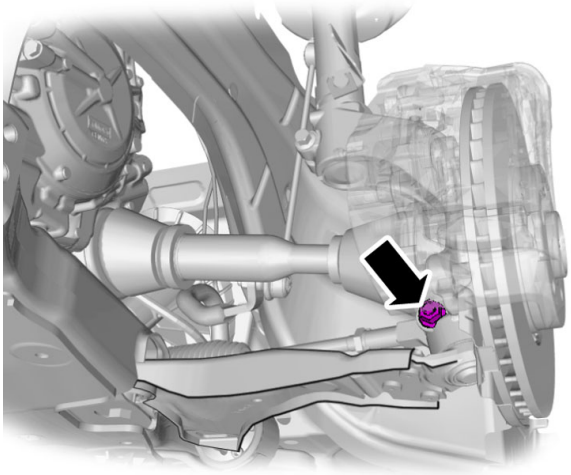

Caution! Make sure that a new bolt is installed.

Remove the screw.

Torque: 2008 XC70 (08-), 2008 XC70 (08-), 2009 XC70 (08-), 2009 XC70 (08-), 2009 XC60, 2009 XC60, 2010 XC70 (08-), 2010 XC70 (08-), 2010 XC60, 2010 XC60, 2011 XC70 (08-), 2011 XC70 (08-), 2011 XC60, 2011 XC60, 2012 V70 (08-), 2012 V70 (08-), 2012 XC70 (08-), 2012 XC70 (08-), 2012 XC60, 2012 XC60, 2013 V70 (08-), 2013 V70 (08-), 2013 XC70 (08-), 2013 XC70 (08-), 2013 XC60, 2013 XC60, 2014 V70 (08-), 2014 V70 (08-), 2014 XC70 (08-), 2014 XC70 (08-), 2014 XC60, 2014 XC60, 2015 V70 (08-), 2015 V70 (08-), 2015 XC70 (08-), 2015 XC70 (08-), 2015 XC60, 2015 XC60, 2016 XC60, 2016 XC60, 2015 V60 Cross Country, 2015 V60 Cross Country, 2016 V70 (08-), 2016 V70 (08-), 2016 XC70 (08-), 2016 XC70 (08-), 2016 V60 Cross Country, 2016 V60 Cross Country, 2016 S60 Cross Country, 2016 S60 Cross Country, 2017 S60 Cross Country, 2017 S60 Cross Country, 2017 V60 Cross Country, 2017 V60 Cross Country, 2017 XC60, 2017 XC60

Ball joint to wheel knuckle , 110 Nm

Torque: 2007 S80 (07-), 2007 S80 (07-), 2008 S80 (07-), 2008 S80 (07-), 2008 V70 (08-), 2008 V70 (08-), 2009 S80 (07-), 2009 S80 (07-), 2009 V70 (08-), 2009 V70 (08-), 2009 S80L, 2009 S80L, 2010 V70 (08-), 2010 V70 (08-), 2010 S80 (07-), 2010 S80 (07-), 2010 S80L, 2010 S80L, 2011 S60 (11-), 2011 S60 (11-), 2011 V60, 2011 V60, 2011 S80 (07-), 2011 S80 (07-), 2011 V70 (08-), 2011 V70 (08-), 2011 S80L, 2011 S80L, 2012 S80 (07-), 2012 S80 (07-), 2012 S60 (11-), 2012 S60 (11-), 2012 S80L, 2012 S80L, 2012 V60, 2012 V60, 2013 S80 (07-), 2013 S80 (07-), 2013 S80L, 2013 S80L, 2013 S60 (11-), 2013 S60 (11-), 2013 V60, 2013 V60, 2008 S80L, 2008 S80L, 2014 S80 (07-), 2014 S80 (07-), 2014 S80L, 2014 S80L, 2014 S60 (11-), 2014 S60 (11-), 2014 S60L, 2014 S60L, 2014 V60, 2014 V60, 2015 S80 (07-), 2015 S80 (07-), 2015 S60 (11-), 2015 S60 (11-), 2015 V60, 2015 V60, 2015 S60L, 2015 S60L, 2016 S60 (11-), 2016 S60 (11-), 2016 V60, 2016 V60, 2016 S80 (07-), 2016 S80 (07-), 2016 S60L, 2016 S60L, 2015 S80L, 2015 S80L, 2017 S60 (11-), 2017

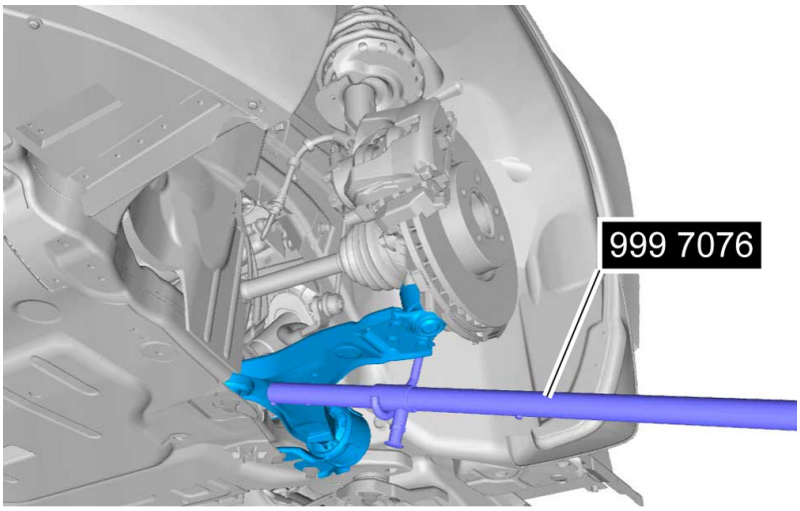

Special Tool: T9997076, Lever

Applies to all other vehicles

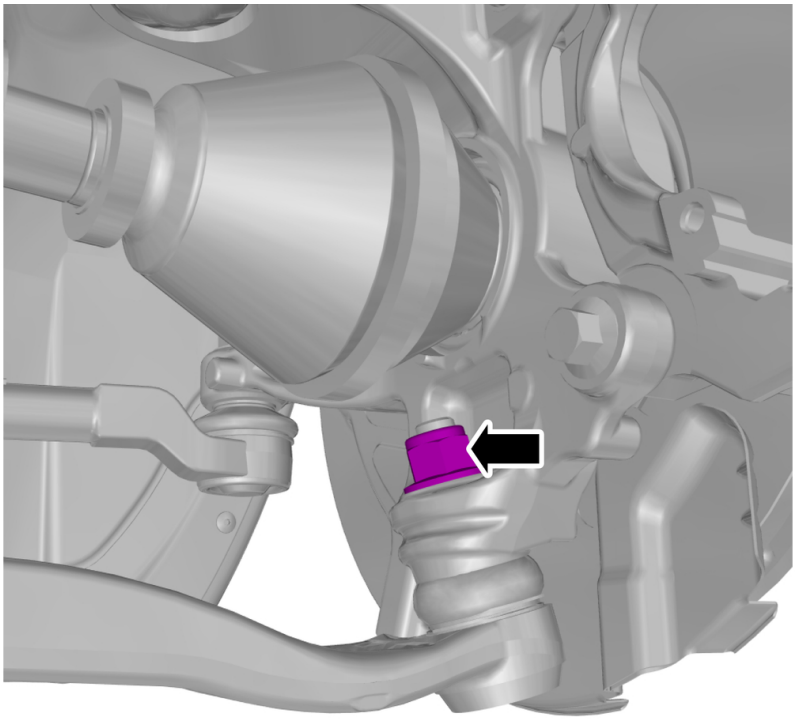

Caution! Make sure that a new nut is installed.

Caution! Make sure that the ball joint ball does not rotate.

Remove the nut.

Torque: 2008 XC70 (08-), 2008 XC70 (08-), 2009 XC70 (08-), 2009 XC70 (08-), 2009 XC60, 2009 XC60, 2010 XC70 (08-), 2010 XC70 (08-), 2010 XC60, 2010 XC60, 2011 XC70 (08-), 2011 XC70 (08-), 2011 XC60, 2011 XC60, 2012 V70 (08-), 2012 V70 (08-), 2012 XC70 (08-), 2012 XC70 (08-), 2012 XC60, 2012 XC60, 2013 V70 (08-), 2013 V70 (08-), 2013 XC70 (08-), 2013 XC70 (08-), 2013 XC60, 2013 XC60, 2014 V70 (08-), 2014 V70 (08-), 2014 XC70 (08-), 2014 XC70 (08-), 2014 XC60, 2014 XC60, 2015 V70 (08-), 2015 V70 (08-), 2015 XC70 (08-), 2015 XC70 (08-), 2015 XC60, 2015 XC60, 2016 XC60, 2016 XC60, 2015 V60 Cross Country, 2015 V60 Cross Country, 2016 V70 (08-), 2016 V70 (08-), 2016 XC70 (08-), 2016 XC70 (08-), 2016 V60 Cross Country, 2016 V60 Cross Country, 2016 S60 Cross Country, 2016 S60 Cross Country, 2017 S60 Cross Country, 2017 S60 Cross Country, 2017 V60 Cross Country, 2017 V60 Cross Country, 2017 XC60, 2017 XC60

Ball joint to wheel knuckle , 110 Nm

Torque: 2007 S80 (07-), 2007 S80 (07-), 2008 S80 (07-), 2008 S80 (07-), 2008 V70 (08-), 2008 V70 (08-), 2009 S80 (07-), 2009 S80 (07-), 2009 V70 (08-), 2009 V70 (08-), 2009 S80L, 2009 S80L, 2010 V70 (08-), 2010 V70 (08-), 2010 S80 (07-), 2010 S80 (07-), 2010 S80L, 2010 S80L, 2011 S60 (11-), 2011 S60 (11-), 2011 V60, 2011 V60, 2011 S80 (07-), 2011 S80 (07-), 2011 V70 (08-), 2011 V70 (08-), 2011 S80L, 2011 S80L, 2012 S80 (07-), 2012 S80 (07-), 2012 S60 (11-), 2012 S60 (11-), 2012 S80L, 2012 S80L, 2012 V60, 2012 V60, 2013 S80 (07-), 2013 S80 (07-), 2013 S80L, 2013 S80L, 2013 S60 (11-), 2013 S60 (11-), 2013 V60, 2013 V60, 2008 S80L, 2008 S80L, 2014 S80 (07-), 2014 S80 (07-), 2014 S80L, 2014 S80L, 2014 S60 (11-), 2014 S60 (11-), 2014 S60L, 2014 S60L, 2014 V60, 2014 V60, 2015 S80 (07-), 2015 S80 (07-), 2015 S60 (11-), 2015 S60 (11-), 2015 V60, 2015 V60, 2015 S60L, 2015 S60L, 2016 S60 (11-), 2016 S60 (11-), 2016 V60, 2016 V60, 2016 S80

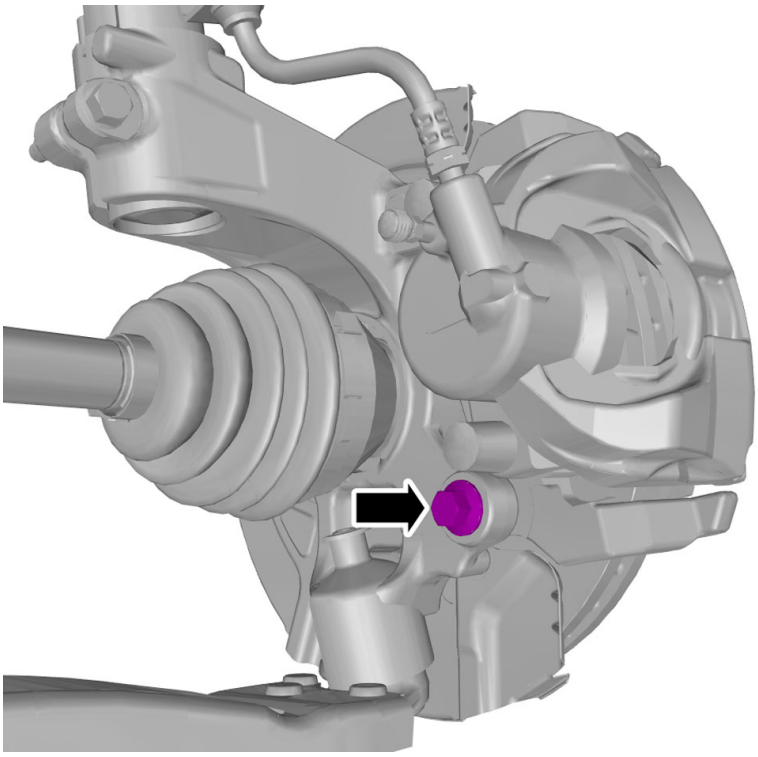

Caution! Make sure that a new bolt is installed.

Remove the screw.

Torque:

Mount front brake caliper , 200 Nm

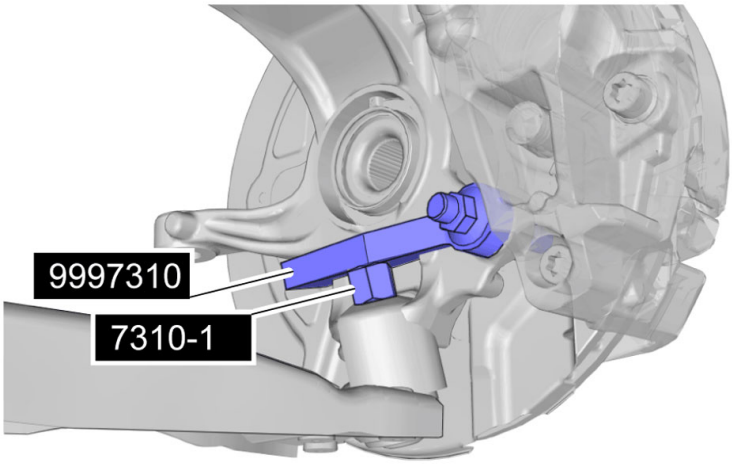

Special Tool: T9997310, Press tool

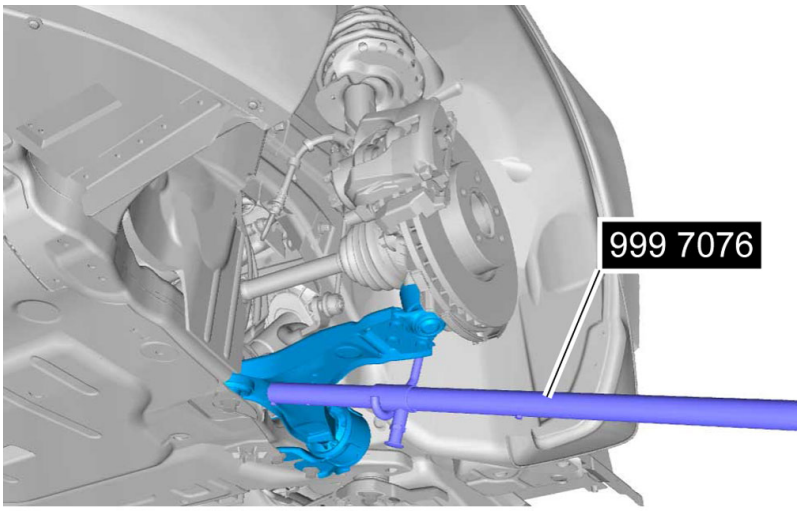

Special Tool: T9997076, Lever

All vehicles

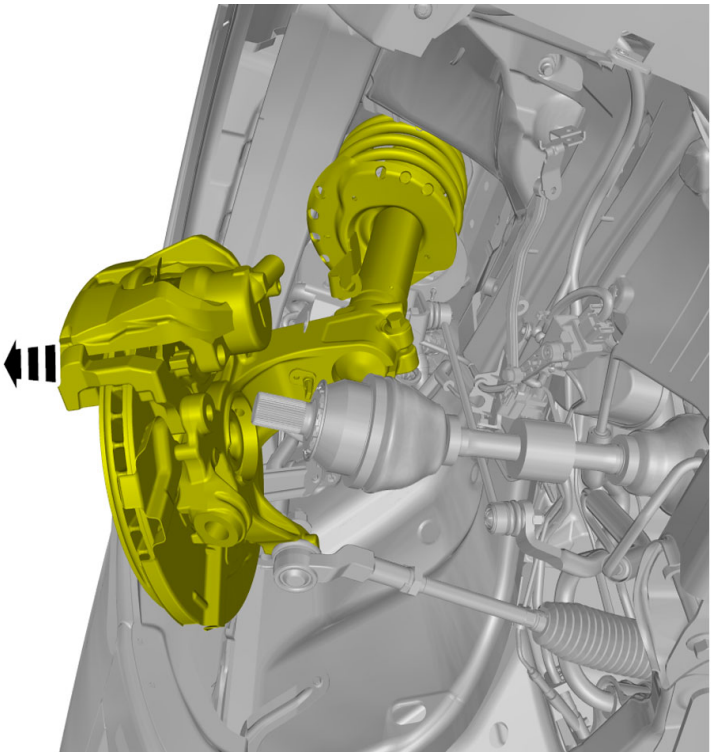

Fold marked part to one side.

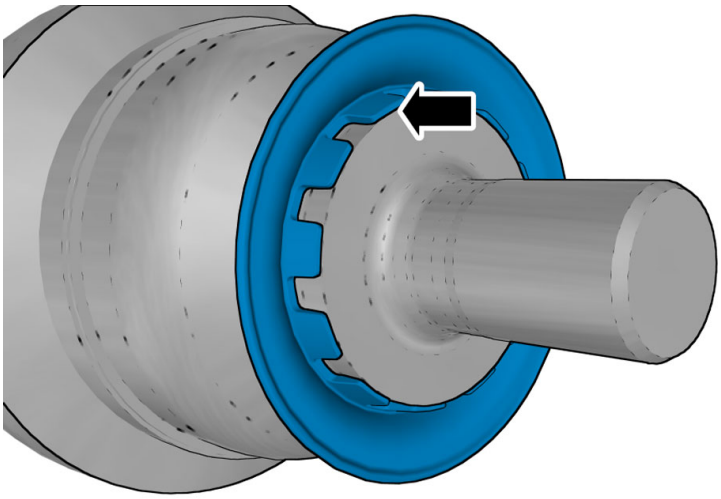

Remove the marked part.

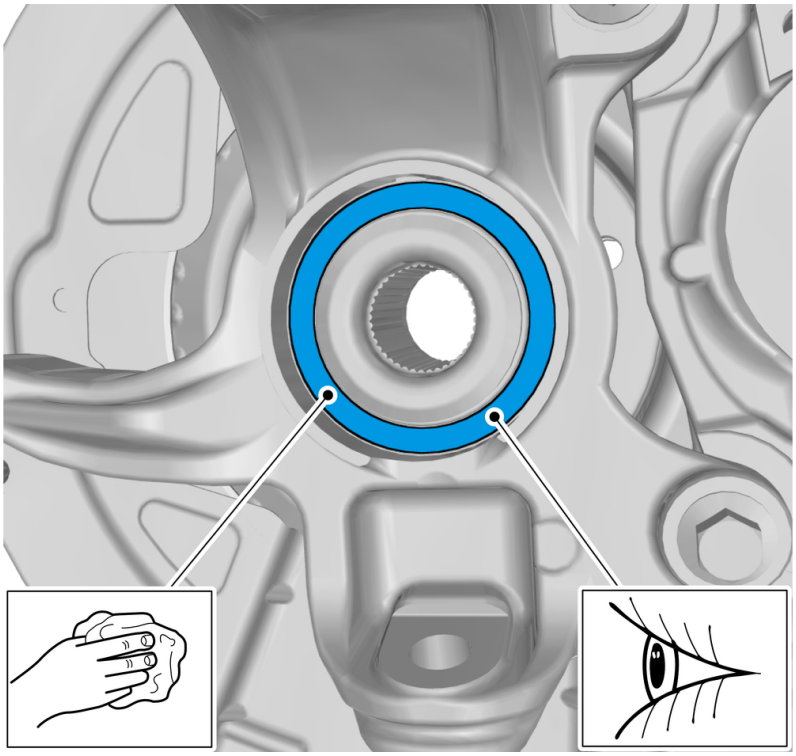

Caution! Make sure that the surface is clean and free of foreign material.

Clean the marked area.

Installation

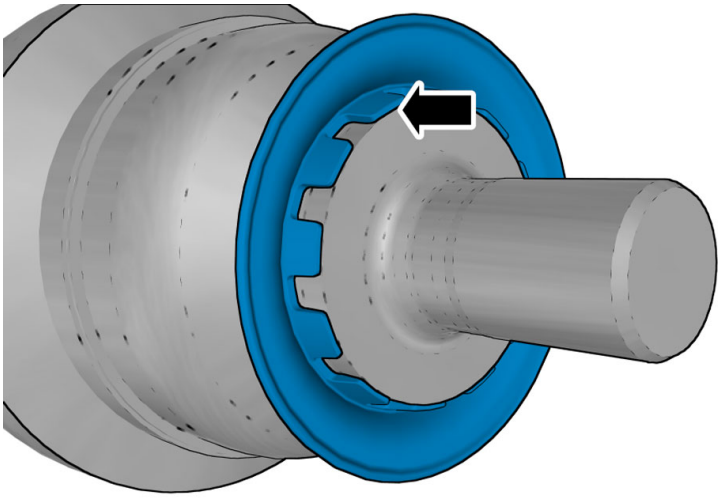

Caution! Make sure that the surface is clean and free of foreign material.

Note! Make sure that the component is installed.

To install, reverse the removal procedure.