HINO PARTS ALL-MAKES

HINO TRUCKS
A Toyota Group Company

PARTS ALERT

DOLECO USA BY MERITOR

CARGO RESTRAINTS AND LIFTING SYSTEMS!!!

May be combined with any Meritor parts order. Refer to Meritor QR Guide.

Doleco USA Products:

- Cargo Restraints, Flatbed Solutions
- Load Securing Accessories
- Interior Van Solutions
- Lifting Slings

How to Order?

- ✓ Simply place your order(s) in Hino DCS
- ✓ Standard part numbers are directly carried over
- ✓ May combine with any Meritor parts order!

Click the link below to download the full catalog.

DOLECO USA CATALOG DOWNLOAD

TO:

Dealer Principals
Parts Managers
General Managers
Parts Sales

BULLETIN: PA-2016-016
DATE: N/A
EXP: N/A

Dealers may go to HinoNet.net, Parts, Sales & Promotions to view this and other active sales.

Quest for the Cup:

On top of this competitive sale pricing, your All-Makes purchases earn you one step closer to winning the extraordinary prizes from the Quest for the Cup Program!

Added Rewards Program:

Hino dealers will also be eligible to acquire Added Rewards points on their All-Makes & Accessories purchases.

Hino Trucks reserves the right to make changes, including change in price, content, description, terms, time period, etc. at any time without notice.

GENUINE HINO PARTS | HINOSTYLE PARTS | HINO PARTS ALL-MAKES

Hino Trucks National PDC
Phone: (866) 372-4466 | Fax: (662) 342-5151
E-Mail: helpdesk@hino.com

DOLECO USA

Vendor: Meritor

Vendor Information:	Meritor, Inc. is a global supplier of a broad portfolio of axle, brake and suspension solutions to original equipment manufacturers and the aftermarket for the transportation and industrial sectors. We serve commercial truck, trailer, bus and coach and off-highway machinery manufacturers, in addition to defense contractors. Products available: new brake shoes, remanufactured brake shoes and kits, minor overhaul kits, hydraulic brakes, disc brake rotors, camshafts, slack adjusters, wheel end components, trailer axles, front axles and components, driveline components, u-joints, Timken bearings, Meritor Wabco air dryers, Haldex air valves, Midland compressors, All-Makes clutches, All-Makes suspension, Gabriel shocks, and reman carriers.
Customer Service & Technical Support:	Hino Parts Support Phone: 866-372-4466 Hino Parts Support Email: helpdesk@hino.com Hino Parts Support Fax: 662-342-3939 Parts Questions (technical questions, part availability, cross reference and catalog information): 1-888-725-9355 OnTrac (Warranty Claims, Technical & Diagnostic Assistance): 1-866-668-7221 or email OnTrac@Meritor.com Email: CustomerCareCenter.Florence@Meritor.com Web: http://www.meritor.com Literature: http://www.meritor.com/customer/northamerica/lod/default.aspx
Order Procedures:	All orders are to be placed through the Hino Dealer Connect System (DCS). The Meritor "Hino All Makes Platform" will be Direct Ship only. Note: Meritor components used "First Fit" on Hino vehicles will continue to be stocked and distributed from the Memphis PDC.
Stock Orders:	Enter orders in DCS Screen DC202 under Sales Type "S". All direct ship items will be shipped from the Meritor PDC.
Emergency Orders:	Enter emergency orders in DCS screen DC202 as Sales Type "E" or "V". All emergency orders will be processed with a shipping and handling charge.
Minimum Order Quantity:	There is no minimum order requirement on emergency or stock orders; however a minimum order value (excluding core value) of Meritor Direct Ship parts qualifies a stock order for prepaid freight (see below).
Freight Policy:	**Contiguous United States:** Freight is prepaid for a minimum order of $1000 or more. Puerto Rico, Hawaii, and Alaska: A $3000.00 order minimum is required for prepaid freight. **Note:** All order dollar values above exclude core charges and orders with brake drums. For brake drum only or mixed orders including brake drums the minimum dollar amount for pre-paid shipment is $3000.00 within the contiguous United States; and $5000.00 for **Puerto Rico, Hawaii, and Alaska:** excluding any core charges. Stock orders under the minimum dollar amounts noted above will be charged freight at the rate billed by the carrier.
Lead Time Policy:	All orders will be shipped based on your Regional Shipping Zone (see attached map). Orders will be shipped approximately 1 week from day of order receipt. All orders ship from Meritor's PDC in Florence, KY.
Part Number Pricing:	Meritor "All-Makes" parts pricing will be available on-line in the Hino DCS system. In addition, the prices will be forwarded to your service bureaus for inclusion in each pricing update.
Part Number Format:	Pricing will be available on-line in the Hino DCS system. In addition, the prices will be forwarded to your service bureaus within two weeks of each pricing update.
Mega Fleet:	All-Makes parts are not included in the Hino Mega Fleet pricing file but should be sold to Mega Fleet customers and filed as Miscellaneous Items in Corcentric when submitting for reimbursement.
Warranty:	Please always view Suppliers warranty documents as warranty varies based on items/products/vehicle applications, etc... Meritor "All Makes" components carry a 1 year, unlimited mileage warranty. Contact OnTrac Call Center (see above) for technical assistance and warranty **pre-**approval code. Please view Vendor warranty documents as warranty varies based on item. Contact vendor directly for a RGA approval number. Warranty covers manufacturers defects only and does not cover damage (installation or progressive). If the vendor provides a RGA number, contact Hino Trucks warranty department. Warranty claims are to be sent back through Hino Trucks corporate.
Part Returns:	Direct Ship Meritor product returns will be limited to 2% of your previous year purchases. A 20% re-stocking fee and freight charges will be charged to the dealer. All annual returns must be coordinated with your Meritor sales representative. Note: Direct ship parts cannot be returned to the Memphis PDC, and any special circumstance returns should be reviewed with your Hino Trucks DPM.
Core Returns:	All cores must be returned to the Hino Trucks Core Return location as per the "1-1-1" Core Return Policy. Core inspection requirements are consistent with Meritor's supplemental core inspection document included as an attachment to this Parts Alert.
Shipping Inspection & Damaged Product:	All merchandise should be inspected upon arrival and carrier damage claims should be filed with the carrier immediately. We are not responsible for, nor are we in a position to make a claim after the freight carrier accepts the shipment from us. For excess stock returns, contact the Vendor directly.
Vendor Cross Reference Web Site:	https://www.meritorpartsonline.com/webapp/wcs/stores/servlet/en/meritor-na-nasales/home
Conclusion:	Meritor has a full portfolio of innovative drivetrain mobility and braking solutions for original equipment manufacturers of trucks, trailers and specialty vehicles, as well as the related aftermarkets in the transportation and industrial sectors. The vast variety of parts available will increase sales potential in the following areas: Axles, Braking, Air & Safety Systems, Clutches, Drivelines, Hybrids, Suspensions, Tire Inflation, and Transfer Cases.
IMPORTANT NOTES!	**Trailer Load Brake Shoe Orders with Multiple Drops and/or Multiple Dealers!** Up to 3 dealers may work together to achieve trailer load discounts on **brake shoes** and have the shipments dropped at up to 3 locations! Dealers must be within 200 miles of each other. **What is needed?** Contact your DPM to coordinate up to three separate POs (one for each ship to location) following the standard trailer load criteria of full skid quantities and equaling a full trailer load. The Hino DPM will submit the POs to Hino customer support via fax at (662) 342-5151 or email at helpdesk@hino.com along with the detail that they are to be treated as a single trailer load with 3 drops. Hino customer support will coordinate with Meritor to arrange order placement and shipment. Dealer will receive order confirmation upon placement, standard lead times apply. Does the 4% discount apply? Yes. Does each dealer have to take the same number of skids? No, must total a trailer load (22 skids). This applicable to any other Meritor parts? No, brake shoes only. Does this only apply to Meritor brake kit or are drums included also? No, brake shoes only. Does the dealer need to sign a commitment sheet? Yes. Can multiple dealers participate together in a annual commitment to get the additional discount? No - **See annual commitment program information and form below.**

PA-2011-40
12-17-15 12-35PM

Doleco by Meritor Suggested Stocking List

Dolceo Part Number	Description	Unit Pack	Main Store QTY	Satellite Store QTY
CARGO BARS				
33200019	Standard-Duty Steel w/ Paddle Handle & Bolt On Feet	4	20	4
33200016	Standard-Duty Aluminum w/ Paddle Handle & Bolt On Feet	4	20	4
33200021	Heavy Duty Jack Bar Galvanized Steel	4	20	4
IUM SHORING BEAMS E-Beam				
33200007	Aluminum Beam 96"	1	25	10
33200008	Aluminum Beam 102"	1	25	10
GISTIC STRAPS & TRACK				
33200001	Beam Socket assembly	10	60	10
33500212	12' Cam Buckle Strap w/ Spring E Fittings	20	40	20
33500216	16' Cam Buckle Strap w/ Spring E Fittings	20	20	20
33500220	20' Cam Buckle Strap w/ Spring E Fittings	20	20	20
33500712	12' Ratchet Buckle Strap w/ Spring E Fittings	25	40	25
33500716	16' Ratchet Buckle Strap w/ Spring E Fittings	25	20	25
33500720	20' Ratchet Buckle Strap w/ Spring E Fittings	20	20	20
33100008	Horizontal E Track	10	50	10
LOAD BINDERS & ACCESSORIES				
28100006	Weld-On Winch Standard	5	10	5
28100008	Portable Winch Standard 2SS	5	10	5
28100010	Notched Slider Winch	5	10	5
28100020	Low Profile Winch	5	5	5
23505602	Load Binder - 3/8" Lever	2	12	2
23503802	Load Binder - 3/8" Ratchet	2	8	2
23503820	Transport Chain - 3/8" x 20' with Clevis Hooks	10	20	10
28200001	Standard Winch Bar Painted	10	10	10
28200004	Winch Bar Combination Chrome	10	10	10
28620015	15" Tarp Strap, Rubber (50 Per Box)	50	150	50
28620021	21" Tarp Strap, Rubber (50 Per Box)	50	100	50
28620031	31" Tarp Strap, Rubber (50 Per Box)	50	100	50
& RATCHET STRAP ASSEMBLIES				
23400227	2" x 27' Ratchet Strap w/ Flat Hooks	10	100	30
23400230	2" x 30' Ratchet Strap w/ Flat Hooks	10	40	20
23404330	3" x 30' Ratchet Strap w/ Flat Hooks	2	6	2
23104427	4" x 27' Winch Strap w/ Flat Hook	10	60	30
23104430	4" x 30' Winch Strap w/ Flat Hook	10	150	40
CONSUMER STRAPS				
38000015	Multi Pak Straps - Ratchet Buckle	4	12	4
38000016	Multi Pak Straps - Cam Buckle	10	10	10
38000017	Multi Pak Straps - Cam Buckle & Ratchet Buckle	10	10	10

DOLECO USA

Cargo Restraint Systems
Lifting Solutions

DOL-USA C-116

About Us

Dolezych is one of the leading professional manufacturers in the area of load securing technologies, lifting equipment, slings and ropes. With our team of more than 600 employees in 9 countries we are ready to serve you.

Headquarter in Germany

DOLECO USA is the newest company in the 80 year old Dolezych global family of businesses. A unique company focused on supplying the very best value with a keen eye on quality, with our own R&D departments and manufacturing facilities based in Europe, South America and Asia.

Founded on the principal of being able to provide the fullest offering of products, at the best value, DOLECO USA is dedicated to providing not only the widest array of products including wire rope assemblies, web and chain slings, as well as all types of load securement, but also engineered solutions to all of your lifting and securement application needs.

We strive to not only meet the demands of our customers, but exceed their expectations. Quality engineering, quality people, low cost production facilities around the world – DOLECO USA.

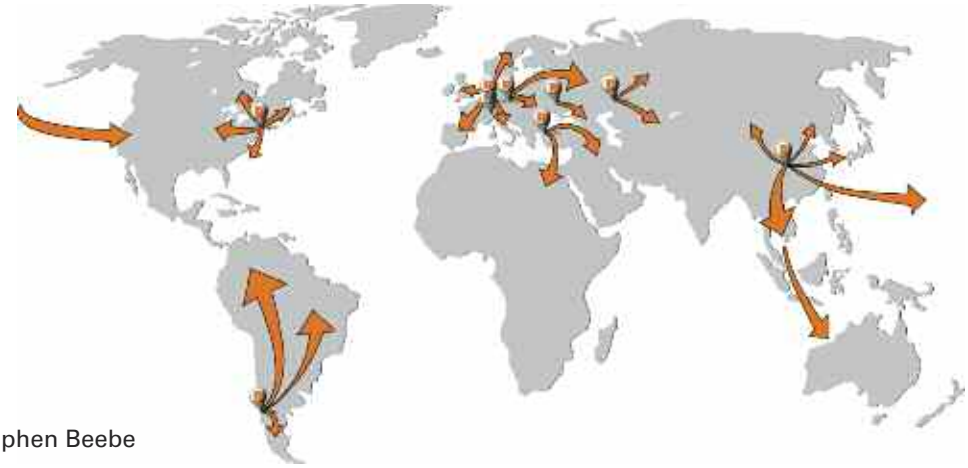

Cover photo by Stephen Beebe

Our manufacturing plant in China

Doleco Kunshan Lifting & Lashing Co., Ltd /China

Tie Downs

Ratchet and Winch Straps

DoPremium WITH Dyneema®

Catalogue Contents

	Page
Winches	6
BOA Winch	13
Winch Tracks/Bars	14
Winch Straps	15
Patented Innovations	17
Load Securing Nets	18
Chains/D-Rings	19
Load Binders/Load Anchors	20
Ratchet Straps	21
Corner/Edge Protection	27
Anti-Slip Mats	28
Flags and Banners	29
Logistic Track/Shoring Bars	30
Cam Buckle Straps	33
Tiedowns	34
Lifting Slings	36
Round Slings	37
DoPremium Products	38
Hardware	41
Webbing	44
Warranty	45
Guidelines	45
Industry Contact Information	49

Load Binders

Chains

Hardware

Winches

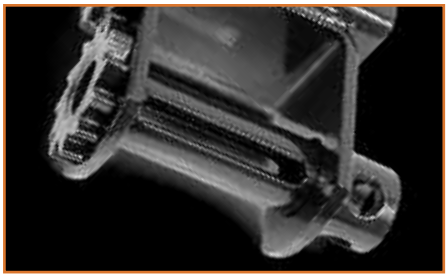

Nets

Slings

Training academy and research institute – Developing Innovative solutions in load securing and improving safety

With the 2014 opened F&T La-SiSe- Institute nearby the Dolezych Headquarter we have at our disposal a unique research location accommodating a training academy, a research institute and an outdoor research lab for road trials for all vehicle classes. The test track embedded in an area of 12.5 hectares is equipped with state-of-the-art measuring technology. A total of just over 6.5 million Euros was invested in this "load securing flagship".

Three modules are available for road tests: Many various conditions for load securing can be simulated in road tests on the circular course, hill track and dynamic motion platform; the data measured in the process can then be scientifically assessed.

The aim of the Institute is to increase traffic safety in transport by road, rail, waterways and in the air and to improve protection for employees. Proper load securing plays a central role as part of the overall logistics process and should also be held accountable on criteria such as cost-effectiveness and efficiency.

Modern test track: Demonstration on Open Day
(Photo: G. Goldstein)

Doleco test laboratory guarantees high quality products

The in-house test laboratory is a vital part of the Doleco High Quality Policy.

With our calibrated testing machines we ensure that only raw material that complies with the requested specification finds its way into our production line. Constant checks of the ready made products furthermore provide a consistent product quality.

Satisfied customers all over the world benefit from reliable quality with up to date and safe products from Doleco.

Flatbed testing machine

Going into details – Measuring the thickness of the webbing

Testing the Breaking strength of a Chain sling

Web Winches

Doleco USA winches comply with WSTDA-T3 and Canadian Standard 905 regulations. Available in different frame configurations to satisfy a variety of applications and load requirements.

All winches shown below are right hand models unless otherwise specified.

- Black powder coat finishes are standard on all Doleco USA winches.
- Stamped working load limit and Doleco name certify quality.

All products are labeled with UPC-Code.

Bottom Mount

A lighter, 7 mm frame design is available on several models. Please contact customer service.

Standard Weld-On

Weight:	8.6 lbs/3.9 kg
WLL:	5,500 lbs/2,500 kg
Part No.:	**2810 0006**

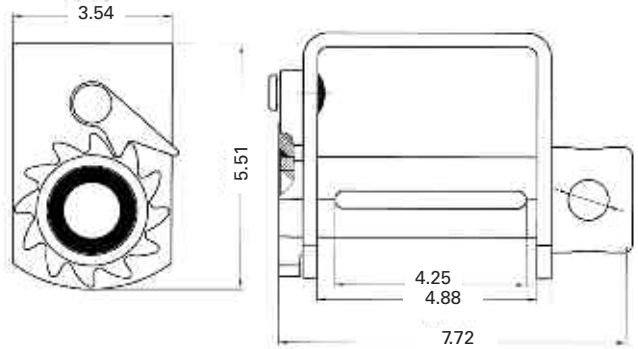

Storable Weld-on

Weight:	9.1 lbs/4.13 kg
WLL:	5,500 lbs/2,500 kg
Part No.:	**2810 0016**

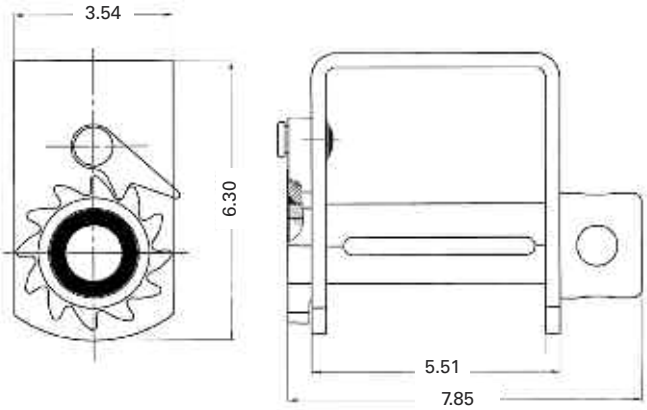

Storable Portable with 2 Set Screws

Weight:	11.1 lbs/5.0 kg
WLL:	5,500 lbs/2,500 kg
Part No.:	**2810 0007**

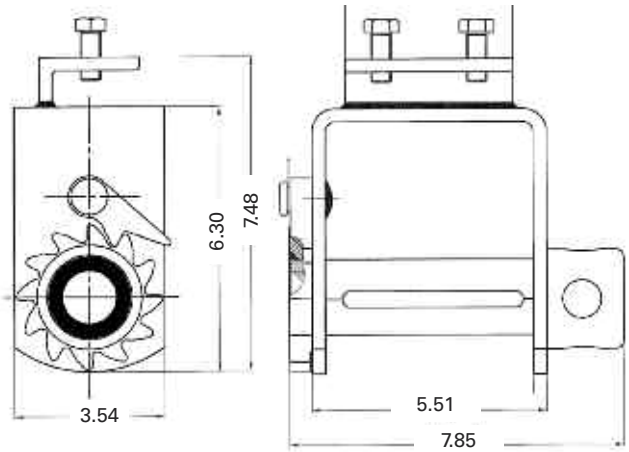

Bottom Mount

Standard Portable with 2 Set Screws

Weight:	10.7 lbs/4.85 kg
WLL:	5,500 lbs/2,500 kg
Part No.:	**2810 0008**

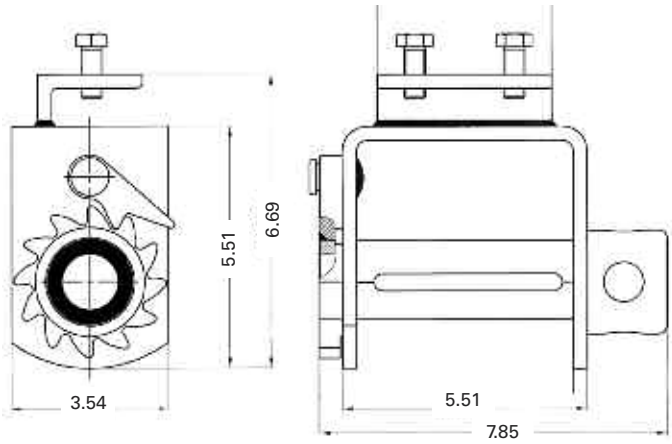

Bottom Mount Standard Storage 2" Spool

Weight:	10.5 lbs/4.77 kg
WLL:	5,500 lbs/2,500 kg
Part No.:	**2810 0017**

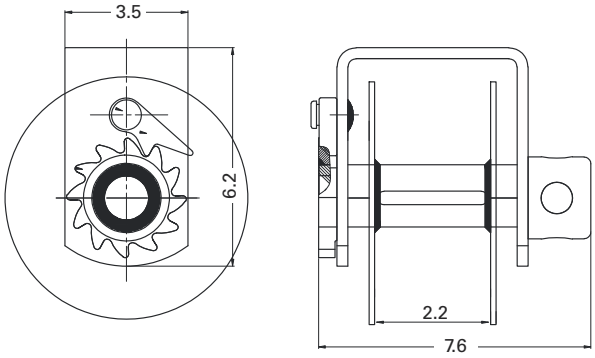

Bottom Mount Standard Storage 3" Spool

Weight:	10.5 lbs/4.77 kg
WLL:	5,500 lbs/2,500 kg
Part No.:	**2810 0018**

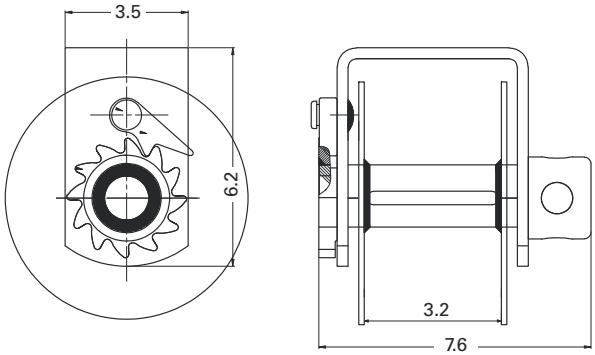

Bottom Mount Standard Storage 4" Spool

Weight:	12.4 lbs/5.6 kg
WLL:	5,500 lbs/2,500 kg
Part No.:	**2810 0019**

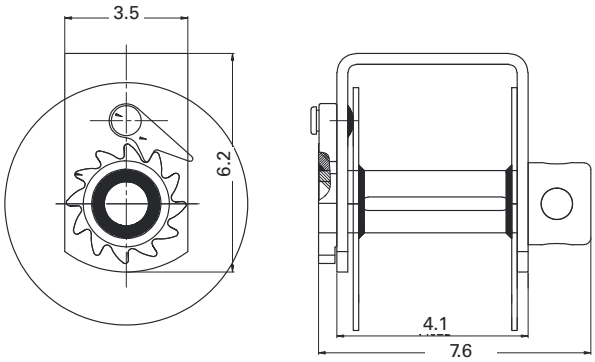

Bottom Mount

Side Mount Low Profile, Portable with 2SS

Weight:	10.1 lbs/4.5 kg
WLL:	5,500 lbs/2,500 kg
Part No.:	**2810 0009**

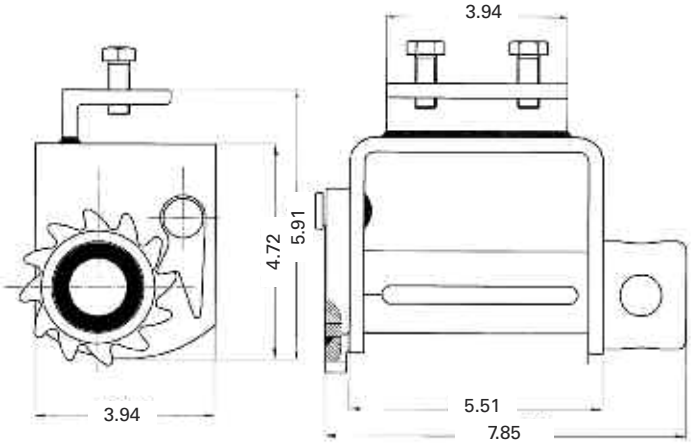

Side mount winches

Low Profile Side Mount Weld-On

Weight:	7.3 lbs/3.3 kg
WLL:	5,500 lbs/2,500 kg
Part No.:	**2810 0020**

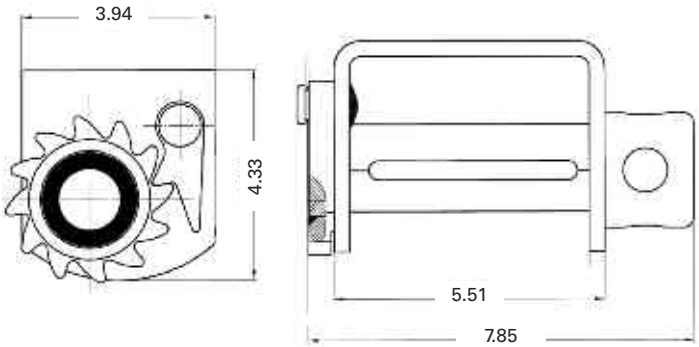

Sliders

Standard C Track Slider

Weight:	7.7 lbs/3.5 kg
WLL:	6,000 lbs/2,730 kg
Part No.:	**2810 0014**

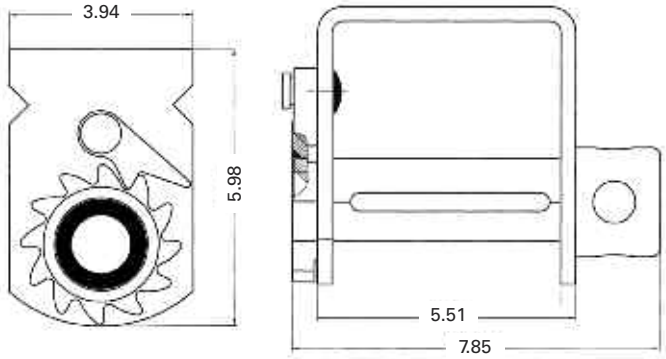

Storable C Track Slider

Weight:	8.3 lbs/3.8 kg
WLL:	6,000 lbs/2,730 kg
Part No.:	**2810 0010**

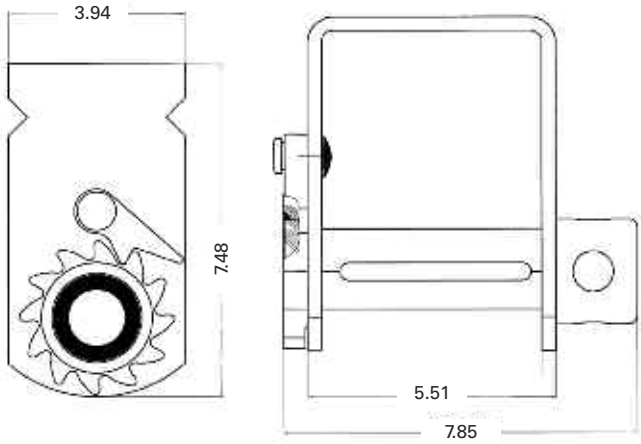

Standard Double L Track Slider

Weight:	8.16 lbs/3.70 kg
WLL:	5,500 lbs/2,500 kg
Part No.:	**2810 0033**

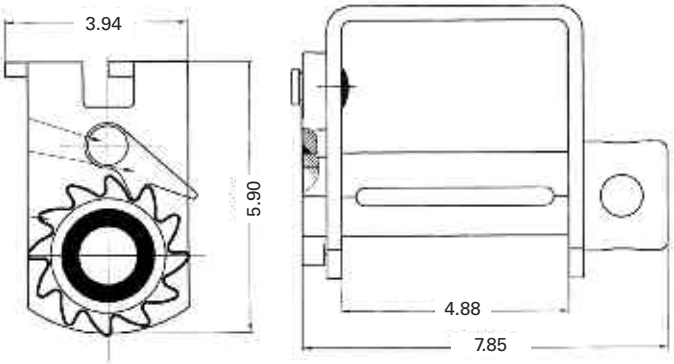

Low Profile Double L Track Slider

Weight:	7.94 lbs/3,60 kg
WLL:	5,500 lbs/2,500 kg
Part No.:	**2810 0035**

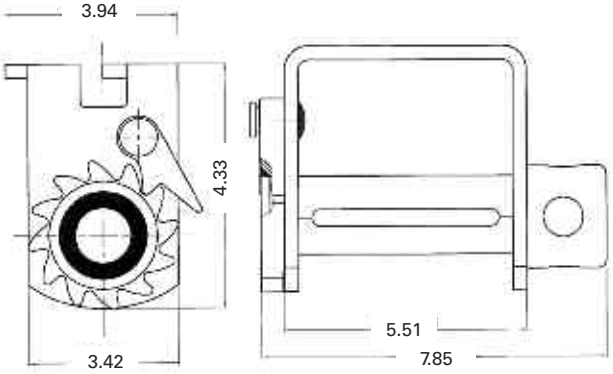

Sliders

Double L Track Storage Slider

Weight:	6.8 lbs/3.09 kg
WLL:	5,500 lbs/2,500 kg
Part No.:	**2810 0031**

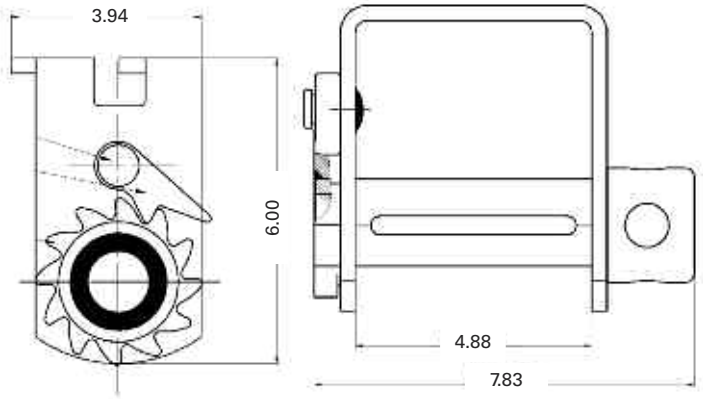

Standard Sliding Track

Weight:	12.5 lbs/5.7 kg
WLL:	5,500 lbs/2,500 kg
Part No.:	**2810 0037**

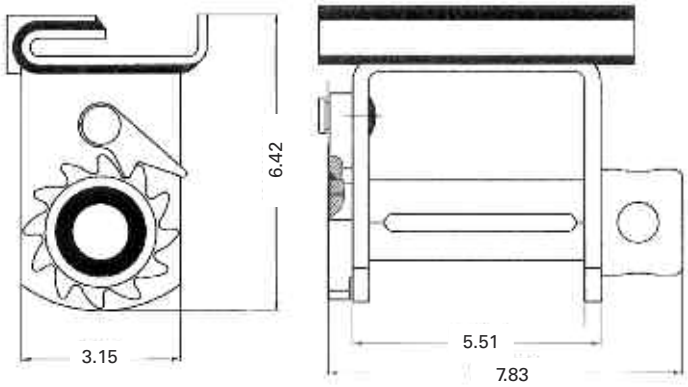

Low Profile Sliding Track

Weight:	11.5 lbs/5.2 kg
WLL:	5,500 lbs/2,500 kg
Part No.:	**2810 0038**

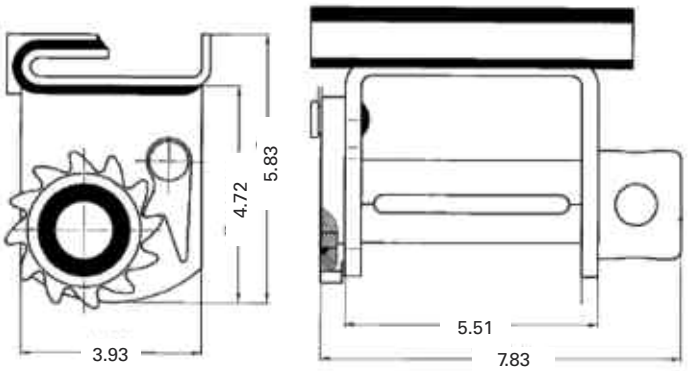

3-Bar

3-Bar Low Profile Side Mount

Weight:	13.3 lbs/6.0 kg
WLL:	6,000 lbs/2,730 kg
Part No.:	**2810 0026**

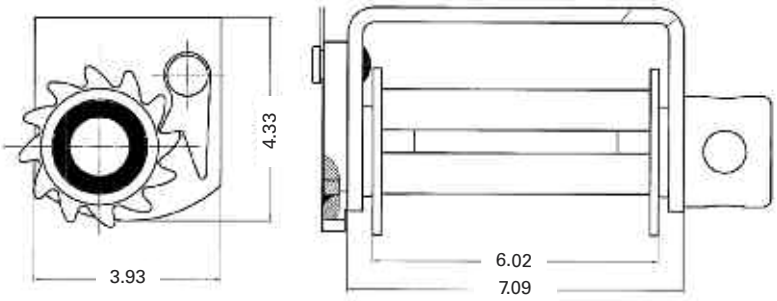

Lashing Winch

Lashing winch with double Hex Drive, 3 mounting holes

Weight:	3.8 lbs/1.7 kg
WLL:	3,333 lbs/ 1,515 kg
Part No.:	**2810 0025**

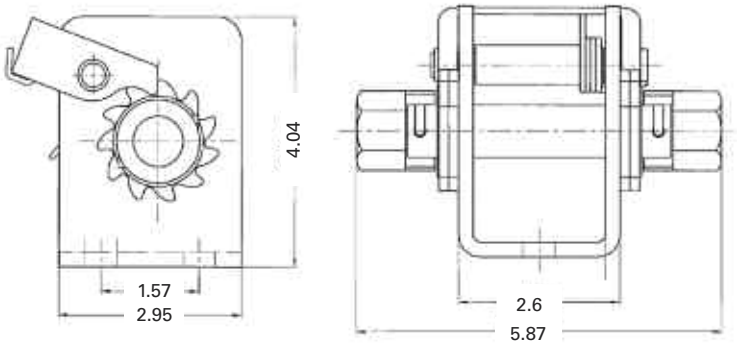

Special Application Winches – 3-Bar and Combination

3-Bar Standard Portable with 2 SS

Weight:	13.3 lbs/6.0 kg
WLL:	6,000 lbs/2,730 kg
Part No.:	**2810 0028**

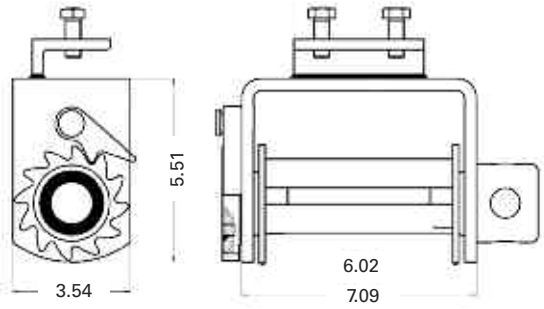

Standard Combination Weld-On

Weight:	10.6 lbs/4.8 kg
WLL:	5,500 lbs/2,500 kg
Part No.:	**2810 0001**

Standard

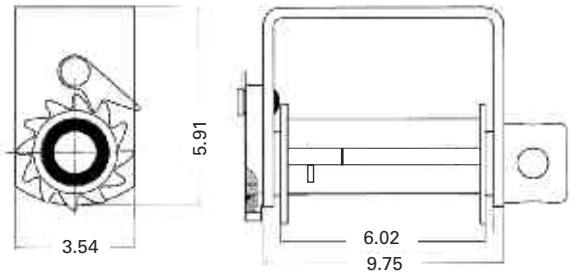

Low Profile Combination Weld on Side Mount

Weight:	10.6 lbs/4.8 kg
WLL:	5,500 lbs/2,500 kg
Part No.:	**2810 0005**

Low Profile

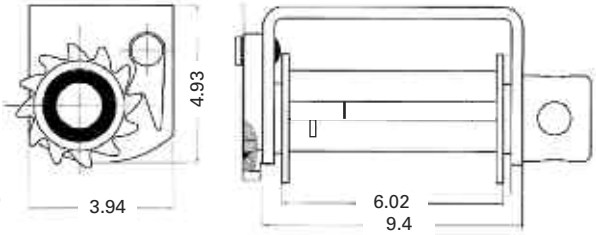

Cable Winches

Doleco USA cable winches are easy to use. Please ensure your cable WLL matches with the safe working load ratings of the winch.

We offer cable winches in right- and left-handed versions.

All products are labeled with UPC-Code.

- Black powder coat finishes are standard on all Doleco USA winches.
- Stamped working load limit and Doleco name certify quality.

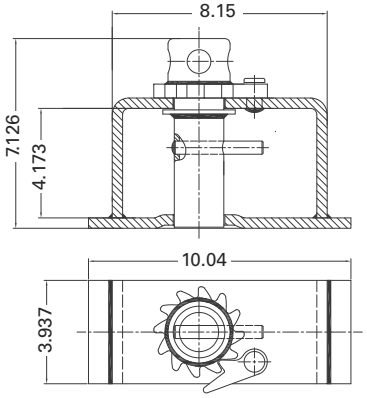

End Mount RH

Weight:	15.4 lbs/ 7.0 kg
WLL:	5,500 lbs/2,500 kg
Part No.:	**2810 0003**

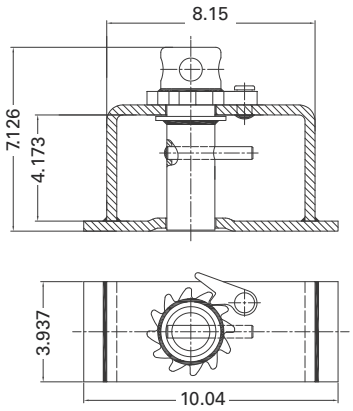

End Mount LH

Weight:	15.4 lbs/ 7.0 kg
WLL:	5,500 lbs/2,500 kg
Part No.:	**2810 0004**

Flatbed Accessories

Doleco USA heavy duty cable assemblies with zinc plated chain anchor can be used on cable, combination and web winches with side washers to prevent binding. Made of top quality aircraft cable and 19" Gr 70 anchor which meets NACM standard.

Cable assemblies with Chain Anchor

Size:	WLL:	Weight:	Part No.:
1/4" x30'	2,300 lbs	5.5 lbs./ 2.49 kg	**2370 0009**
1/4" x32'	2,300 lbs	7.9 lbs./ 3.58 kg	**2370 0010**
7/32"x30'	1,867 lbs	5.5 lbs./ 2.49 kg	**2370 0011**
7/32"x32'	1,867 lbs	5.8 lbs./ 2.63 kg	**2370 0012**
5/16"x30'	3,300 lbs	7.9 lbs./ 3.58 kg	**2370 0013**
5/16"x32'	3,300 lbs	8.4 lbs./ 3.81 kg	**2370 0014**

Boa Winch Tie-Down System

The patented BOA WINCH tie down system offers unparalleled performance and a one-year warranty against manufacturing defects.

C Track Slider

WLL:	5,500 lbs
Weight:	14.4 lbs/6.5 kg
Color:	Silver Zinc
Part No.:	**2810 0040**

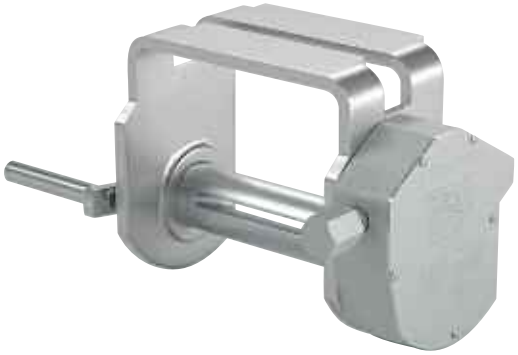

Double L Slider

WLL:	5,500 lbs
Weight:	14.3 lbs/6.2 kg
Color:	Silver Zinc
Part No.:	**2810 0039**

Handle

Weight:	3.3 lbs/1.5 kg
Color:	Orange
Part No.:	**2820 0008**

Other BOA WINCH colors available at minimum order:

An exciting new addition to the market, the BOA WINCH uses a patented 22:1 gear drive ratio to give more pretension than conventional winches. Simple to install and operate, BOA WINCH offers a safer way for users of all sizes and strengths to secure loads using either webbing straps or wire ropes. No more having to deal with ratchet winches or winch bars, the BOA WINCH utilizes a hand crank and self locking design to secure loads. Offering performance unparalleled by competitors, the BOA WINCH comes with a one-year warranty against manufacturing defects.

Winch Track For standard C track and Double L track slider winches

Steel C Track – Formed from high strength 1/4" steel plate

Weight:	39.0 lbs/17.73 kg
Length:	6 ft/182.88 cm
Part No.:	**2830 0001**

Weight:	78 lbs/35.4 kg
Length:	12 ft/364.76 cm
Part No.:	**2830 0002**

Aluminum C Track – High strength aluminum extrusion

Weight:	19 lbs/8.64 kg
Length:	6 ft/182.88 cm
Part No.:	**2830 0003**

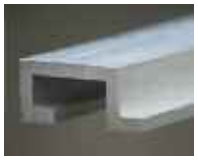

Aluminum Double L Track – Designed for Double L slider winches

Weight:	26.25 lbs/11.92 kg
Length:	10 ft/304.80 cm
Part No.:	**2830 0004**

Winch Bars

Tapered and angled at the end for easy operation, Doleco's winch bar handles are knurled at two sections, and the mushroom tip helps keep the bar from slipping from the winch cap. They are heat-treated for extra strength and cycle tested to simulate years of heavy use. Combination winch bars can be used to release tension on chain binders. **Use caution to avoid injury. Not to be used as a cheater bar.**

Flanged mushroom tip helps keep the bar from slipping from the winch cap.

Standard Painted

Weight:	5.0 lbs/2.27 kg
Part No.:	**2820 0001**

Combination Box End Chrome

Weight:	6.5 lbs/2.95 kg
Part No.:	**2820 0002**

Combination Chrome

Weight:	5.0 lbs/2.27 kg
Part No.:	**2820 0004**

Standard Chrome

Weight:	6.5 lbs/2.95 kg
Part No.:	**2820 0003**

This new industry standard winch bar offers 2 options for your use

Patented! XCELBAR

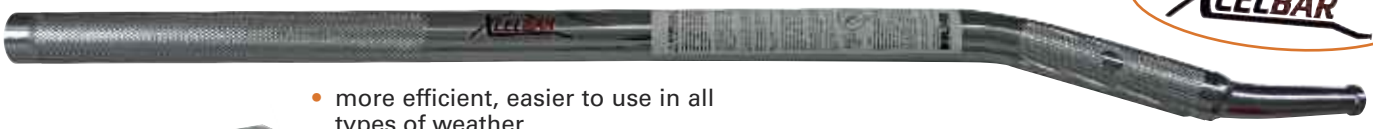

- more efficient, easier to use in all types of weather
- moves quickly and easily between winches
- notable sense of "balance" and ease of use
- with its patented angle and ergonomic design replaces the standard straight winch bar

Xcel I

Weight:	5.0 lbs/2.27 kg
Part No.:	**2820 0005**

Patented! XCELBAR

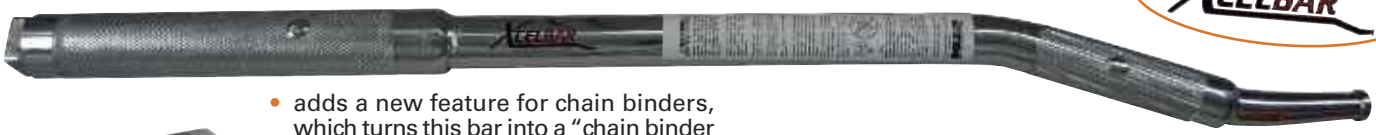

- adds a new feature for chain binders, which turns this bar into a "chain binder handle extension" for releasing only
- the Xcel II's design includes a squared attachment at the end of the handle
- Being able to release the chain binder in a controlled manner offers you the ability to re-secure the chain binder should the load begin to shift

Xcel II

Weight:	6.5 lbs/2.95 kg
Part No.:	**2820 0006**

Winch Straps

Available in many different configurations to suit your specific needs, Doleco winch and ratchet straps meet the highest standards for heavy duty wear, abrasion resistance, and strength. Meeting WSTDA T-1 Standards for Synthetic Web Tiedowns, all Doleco straps are made using the best webbing and most trusted hardware.

Standard 2" Winch Strap WLL: 3,333 lbs/1,515 kg

with Delta Ring

Weight:	3.0 lbs/1.36 kg	3.2 lbs/1.45 kg
Length:	27 ft	30 ft
Part No.:	**2310 1227**	**2310 1230**

with Wire Hook

Weight:	3.0 lbs/1.36 kg	3.2 lbs/1.45 kg
Length:	27 ft	30 ft
Part No.:	**2310 2227**	**2310 2230**

with Flat Hook

Weight:	3.0 lbs/1.36 kg	3.2 lbs/1.45 kg
Length:	27 ft	30 ft
Part No.:	**2310 0227**	**2310 0230**

Standard 3" Winch Strap WLL: 5,400 lbs/2,450 kg

with Flat Hook

Weight:	4.3 lbs/1.95 kg	4.7 lbs/ 2.13 kg
Length:	27 ft	30 ft
Part No.:	**2310 4327**	**2310 4330**

with Chain Anchor

Weight:	6.7 lbs/3.04 kg	7.1 lbs/3.22 kg
Length:	27 ft	30 ft
Part No.:	**2310 5327**	**2310 5330**

Standard 4" Winch Strap WLL: 5,400 lbs/2,450 kg

with Flat Hook

Weight:	5.0 lbs/2.27 kg	5.5 lbs/2.49 kg	6.6 lbs/2,99 kg
Length:	27 ft	30 ft	40 ft
Part No.:	**2310 4427**	**2310 4430**	**2310 4440**

with Delta Ring

Weight:	4.8 lbs/2.18 kg	5.2 lbs/2.36 kg
Length:	27 ft	30 ft
Part No.:	**2310 7427**	**2310 7430**

with Twisted Loop

Weight:	5.5 lbs/2.49 kg
Length:	30 ft
Part No.:	**2310 8430**

with Chain Anchor

Weight:	7.0 lbs/3.18 kg	7.5 lbs/3.4 kg
Length:	27 ft	30 ft
Part No.:	**2310 5427**	**2310 5430**

with Grab Hook

Weight:	6.0 lbs/2.72 kg	6.5 lbs/2.95 kg
Length:	27 ft	30 ft
Part No.:	**2310 9427**	**2310 9430**

Roll-On/Roll-Off Container Strap

Strap with Container Hook

Weight:	3.5 lbs/1.59 kg
WLL:	5,400 lbs/2,450 kg
Part No.:	**2310 4405**

4" x 5-ft. with Container Hook-FMCSA Compliant

Strap with Container Hook and Sewn Loop

Weight:	3.5 lbs/1.59 kg
WLL:	5,400 lbs/2,450 kg
Part No.:	**2310 4499**

DoPremium 2" Winch Straps WLL: 3,333 lbs/1,515 kg

The ultimate winch straps for extreme applications. Doleco's new DoPremium webbing delivers greater durability, strength and abrasion resistance. Testing shows 80% retained strength after abrasion. This is approximately twice the retained strength of standard winch straps.

with Flat Hooks

Weight:	3.9 lbs/1.77 kg	4.2 lbs/1.91 kg
Length:	27 ft	30 ft
Part No.:	**2311 4227**	**2311 4230**

DoPremium 3" Winch Straps WLL: 5,400 lbs/2,450 kg

with Flat Hooks

Weight:	6.1 lbs/ 2.7 kg
Length:	30 ft
Part No.:	**2311 4330**

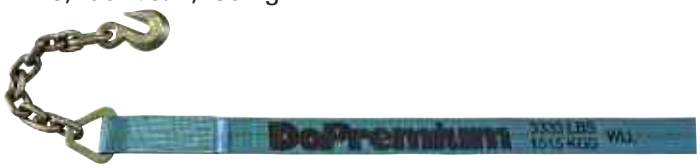

with Chain Anchors

Weight:	9.2 lbs/ 4.17 kg
Length:	30 ft
Part No.:	**2311 5330**

DoPremium 4" Winch Straps WLL: 5,400 lbs/2,450 kg

with Delta Ring

Weight:	6.2 lbs/2.81 kg	6.8 lbs/3.08 kg
Length:	27 ft	30 ft
Part No.:	**2311 7427**	**2311 7430**

with Half Twisted Loop

Weight:	7.2 lbs/ 3.27 kg
Length:	30 ft
Part No.:	**2311 9430**

with Flat Hook

Weight:	6.5 lbs/2.95 kg	7.2 lbs/3.27 kg
Length:	27 ft	30 ft
Part No.:	**2311 4427**	**2311 4430**

with Chain Anchor

Weight:	9.8 lbs/ 4.45 kg
Length:	30 ft
Part No.:	**2311 5430**

Roll-On/Roll-Off Container Strap

4" x 5-ft. with Container Hook-FMCSA Compliant

Strap with Container Hook

Weight:	3.5 lbs/1.59 kg
WLL:	5,400 lbs/2,450 kg
Part No.:	**2311 4405**

Strap with Sewn Loop

Weight:	3.5 lbs/1.59 kg
WLL:	5,400 lbs/2,450 kg
Part No.:	**2311 4499**

Patented Innovations

Designed with input from our 80 years of experience in the load securing industry, our patented innovations offer load securing solutions unlike any other products currently on the market. From ratchet levers to force indicators and cargo nets, we produce our own uniquely designed products with a competitive edge. Made from the highest quality webbing, metals, and fasteners, our products take load security, personnel safety, and national standards to the next level.

DoMulti Long lever pull ratchet – the ergonomic ratchet

Zinc plated long handle ratchet with lever safety. Highly stretched Polyester fabric, 2" webbing, low elongation. Zinc plated hooks. WLL 5,511 lbs/2,500 kg.

Two-piece lashing strap with 2x Double J-Hook

Weight:	7.39 lbs/3.35 kg	7.62 lbs/3.45 kg
Length:	27 ft	30 ft
Part No.:	**2651 5034-27**	**2651 5034-30**

- Long tensioner lever (350 mm) and ideal transmission ratio (20 teeth)
- Easy handling – high pretension force (2,222 lbs / 1,000 kg can be achieved)
- Four cog wheels instead of two
- Wear-resistant and robust
- Easy to open – safe construction

DoMulti Ratchet with DoMess tension indicator and U-Profile Hook

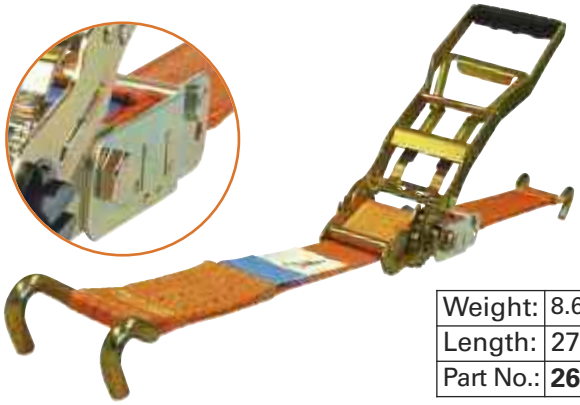

Two-piece lashing strap with 2x U-Profile Hook

Weight:	8.6 lbs/3.90 kg	8.83 lbs/4.00 kg
Length:	27 ft	30 ft
Part No.:	**2652 5078-27**	**2652 5078-30**

- Width 2"
- WLL 5,511 lbs/2,500 kg
- Zinc plated long handle ratchet with lever safety, four cog wheels
- Highly stretched Polyester fabric, low elongation, abrasion resistant
- Zinc plated hooks

Do2Step An innovation based on the well-proven DoMulti long lever ratchets

The easy and safe way to avoid accidents that can be caused by instable, sliding, and tilting loads when opening the lashing devices.

The first step loosens the webbing without loosening the lashing devices, maintaining load security. The second step opens the lashing devices and allows removal of the load once safety has been ensured.

Two-piece lashing strap with 2x Profile Hook

Weight:	9.41 lbs/4.27 kg	9.7 lbs/4.40 kg
Length:	27 ft	30 ft
Part No.:	**2650 5434-27**	**2650 5434-30**

- Width 2"
- WLL 5,511 lbs/2,500 kg
- Zinc plated long handle ratchet with lever safety
- Four cog wheels
- Pre-stretched polyester fabric
- low elongation
- Abrasion resistant
- Zinc plated hooks

Please contact customer service for more information

DoMess Tension Force Indicator

DoMess Tension Force Indicator allows easy reading of the tension forces applied to the lashing strap, ensuring greater user safety and overall efficiency. Accurate tension readings minimize both lashing systems and installation time used. Simply install the DoMess indicator, move the lever, and read the value.

DoMess 3 – chromated mobile pretension force indicator

Weight:	5.29 lbs/2.4 kg
Part No.:	**0650 4035**

DoMess 3 – chromated with case

Weight:	9.92 lbs/4.5 kg
Part No.:	**0650 4031**

Can alternatively be connected to the ratchet or to the long part

DoMess 2 – for all 2 inch ratchets

Weight:	1.09 lbs/0.495 kg
Part No.:	**0650 4099**

Removable Handle Ratchet

The DoZurr ratchet with removable handle has several advantages over ratchets with standard handles. It is highly theft-resistant, low-weight, low-profile, and high-quality.

Perfect for use on one way lashings, train loads, and export deliveries.

Standard ratchet with removable handle, 2 inch

	Ratchet body only	Handle only
Weight:	1.21 lbs/0.551 kg	2.67 lbs/1.21 kg
Part No.:	**0650 5017**	**0650 5016**

DoKEP® SIT net®

DoKEP® Nets

DoKEP nets are custom designed depending on the application. Available in either one or two inch widths with an assortment of attachment options, our DoKEP nets are constructed with a patented sewing technique that gives them twice the load security capacity of our old nets. Our nets are fast and easy to install, and are a dependable and durable way to secure your loads. Contact sales for more information.

Please contact customer service for more information

Transport Chain

Grade 70 Transport Chain meets NACM standards

Chain Assemblies with Clevis Hooks

Size:	WLL:	Weight:	Part No.:
5/16" x 16'	4,700 lbs	17.4 lbs / 7.89 kg	**2350 5616**
5/16" x 20'	4,700 lbs	22.0 lbs / 9.98 kg	**2350 5620**
5/16" x 25'	4,700 lbs	26.7 lbs / 12,11 kg	**2350 5625**
3/8" x 16'	6,600 lbs	27.6 lbs / 12,52 kg	**2350 3816**
3/8" x 20'	6,600 lbs	30.4 lbs / 13.79 kg	**2350 3820**
3/8" x 25'	6,600 lbs	38.5 lbs / 17.46 kg	**2350 3825**
1/2" x 20'	11,300 lbs	57.5 lbs / 26.08 kg	**2350 1220**
1/2" x 25'	11,300 lbs	62.3 lbs / 28.26 kg	**2350 1225**

Chain assemblies available in 5-gallon drums

Size:	WLL:	Weight:	Part No.:
5/16" x 16'	4,700 lbs	17.6 lbs / 7.85 kg	**2361 5616**
5/16" x 20'	4,700 lbs	22.0 lbs / 9.98 kg	**2361 5620**
5/16" x 25'	4,700 lbs	26.7 lbs / 12,11 kg	**2361 5625**
3/8" x 16'	6,600 lbs	25.4 lbs / 11.52 kg	**2361 3816**
3/8" x 20'	6,600 lbs	32.0 lbs / 14.51 kg	**2361 3820**
3/8" x 25'	6,600 lbs	39.7 lbs / 18.01 kg	**2361 3825**

Bulk Chains

Size:	Weight:	Part No.:
5/16" x 400'	408 lbs / 185.07 kg	**2350 5600**
3/8" x 200'	296 lbs / 134.26 kg	**2350 3800**
1/4" x 400'	262 lbs / 118.84 kg	**2350 1400**
1/2" x 100'	251 lbs / 113.85 kg	**2350 1200**

Clevis Hooks

Size:	Weight:	Part No.:
5/16"	0.85 lbs / 0.39 kg	**2350 5604**
3/8"	1.10 lbs / 0.5 kg	**2350 3804**
1/4"	0.40 lbs / 0.18 kg	**2350 1404**
1/2"	2.10 lbs / 0.95 kg	**2350 1204**

Slip Hooks G70, Zinc Plated with Safety Latch

Size:	WLL:	Weight:	Part No.:
1/4"	2,750 lbs	.59 lbs / .27 kg	**2360 0058**
5/16"	4,300 lbs	.92 lbs / .42 kg	**2360 0059**
3/8"	5,250 lbs	1.32 lbs / .60 kg	**2360 0060**
1/2"	9,000 lbs	2.90 lbs / 1.32 kg	**2360 0061**

Coil Rack

Designed to be used with wood bracing to secure coils in transit.

Light Duty, 10 gauge steel

Weight:	5.7 lbs / 2.6 kg
Part No.:	**2370 0001**

Heavy Duty Coil Rack

Weight:	15.63 lbs / 7.09 kg
Part No.:	**2370 0002**

Heavy Duty D-Rings

Forged Ring Assembly

with Bolt-on Clip

Size:	1/2 inch
WLL	4,000 lbs
Weight:	1.1 lbs/ 0.5 kg
Part No.:	**2840 0001**

with Weld-on Clip

Size:	1/2 inch
WLL	4,080 lbs
Weight:	1.1 lbs/ 0.5 kg
Part No.:	**2840 0002**

with Weld-on Clip

Size:	5/8 inch
WLL	6,300 lbs
Weight:	2.0 lbs / 0.9 kg
Part No.:	**2840 0003**

with Weld-on Clip

Size:	3/4 inch
WLL	9,120 lbs
Weight:	2.3 lbs / 1.0 kg
Part No.:	**2840 0004**

with Weld-on Clip

Size:	1 inch
WLL	15,586 lbs
Weight:	4.8 lbs / 2.2 kg
Part No.:	**2840 0005**

Load Binders

Drop forged steel meeting WSTDA T-6 specifications. In three popular models.

Lever Load Binders

Ratchet Load Binders

WLL:	Weight:	Accepted Chain:	Part No.:
2,600 lbs	3.5 lbs	1/4"–5/16"	**2350 1401**
5,400 lbs	7.9 lbs	5/16"–3/8"	**2350 5601**
6,600 lbs	9.4 lbs	5/16"–3/8"	**2350 6601**
9,200 lbs	11.9 lbs	3/8"–1/2"	**2350 3801**
13,000 lbs	20.8 lbs	1/2"–5/8"	**2350 1201**

WLL:	Weight:	Accepted Chain:	Part No.:
2,000 lbs	3.5 lbs	1/4"–5/16"	**2350 1402**
5,400 lbs	7.9 lbs	5/16"–3/8"	**2350 5602**
6,600 lbs	9.4 lbs	5/16"–3/8"	**2350 6602**
9,200 lbs	11.9 lbs	3/8"–1/2"	**2350 3802**
13,000 lbs	20.8 lbs	1/2"–5/8"	**2350 1202**

Recoilless Lever Load Binder

WLL:	Weight:	Accepted Chain:	Part No.:
5,400 lbs	9.0 lbs	5/16"–3/8"	**2350 5603**

Chain Tensioner

Our Chain Tensioner is twice as fast as a regular tensioner, has a folding handle for ease of storage, and can be locked with a padlock for additional load security.

Part No.:	Size	Weight (lbs)	WLL (lbs)
2350 5614	5/16"~3/8" G70-G80	10.91	7,100
2350 3814	3/8"~1/2" G70-G80	13.36	12,000
2350 1214	1/2"~5/8" G70-G80	17.09	18,100

Patented, innovative Load Anchor

These Load Anchors are a patented new way to secure loads to truck beds. Flush fitting when not in use, Load Anchors are easy to install, easy to use, and have a self cleaning design. They will not freeze up under muddy, wet, or other poor conditions. Safer to use than alternative designs.

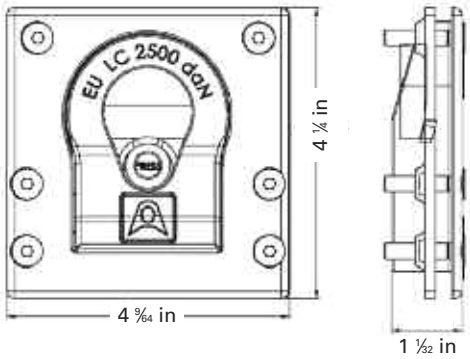

WLL lbs:	LC daN:	Width x Length:	Eye Diameter	Part No.:	Weight:
4,400	2500	105 x 108 mm / 4.13 x 4.25 in	33 mm / 1.30 in	**0600 3025**	1.96 lbs / 0.890 kg

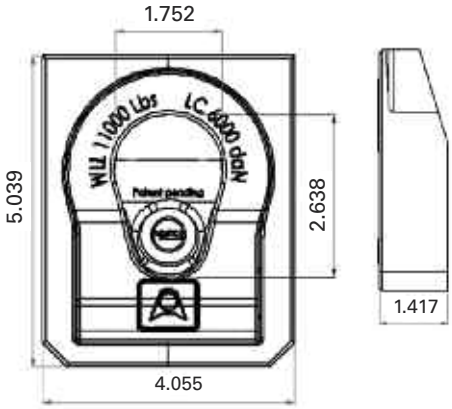

WLL lbs:	LC daN:	Width x Length:	Eye Diameter	Part No.:	Weight:
11,000	6000	103 x 130 mm / 4.06 x 5.12 in	45 mm / 1.77 in	**0600 3060**	3.64 lbs / 1.65 kg

Ratchet Strap Assemblies

Meets FMCSA and WSTDA T-1 standards for synthetic web tiedowns

2" Long-Wide Handle Ratchet Buckle Straps – WLL: 3,333 lbs/1,515 kg

with Flat Hooks

Weight:	6.4 lbs/2.9 kg	6.5 lbs/2.95 kg
Length:	27 ft	30 ft
Part No.:	**2340 0227**	**2340 0230**

with Chain Anchors

Weight:	11.5 lbs/5.22 kg	11.7 lbs/5.31 kg
Length:	27 ft	30 ft
Part No.:	**2340 3227**	**2340 3230**

with Wire Hooks

Weight:	6.3 lbs/2.86 kg	6.5 lbs/2.95 kg
Length:	27 ft	30 ft
Part No.:	**2340 2227**	**2340 2230**

2" Short-Wide Handle Ratchet Buckle Straps – WLL: 3,333 lbs/1,515 kg

with Flat Hooks

Weight:	6.1 lbs/2.77 kg	6.3 lbs/2.86 kg
Length:	27 ft	30 ft
Part No.:	**2340 1227**	**2340 1230**

2" Standard Handle Ratchet Buckle Straps

– WLL: 3,333 lbs/1,515 kg

with Flat Hooks

Weight:	6.3 lbs/2.86 kg	6.5 lbs/2.95 kg
Length:	27 ft	30 ft
Part No.:	**2343 2227**	**2343 2230**

New: Quick Release Side Loading Ratchet Assembly

Faster lashing saves time

Frequent loading and unloading operations often mean to the driver time-consuming feeding the webbing into the ratchet, tightening, loosening, unloading and possibly removing the webbing from the ratchet.

With the new Doleco USA Ratchet you are saving valuable time when lashing: The strap is inserted through a side gate directly into the spool, which eliminates the time-consuming threading process of webbing into the ratchet.

2“ Side Loading Ratchet „DoRapid“ – WLL: 3,333 lbs/1,515 kg

with Flat Hooks

Weight:	5.6 lbs/2.52 kg	5.7 lbs/2.57 kg
Length:	27 ft	30 ft
Part No.:	**2653 0227**	**2653 0230**

with Wire hooks

Weight:	5.5 lbs/2.48 kg	5.6 lbs/2.52 kg
Length:	27 ft	30 ft
Part No.:	**2653 2227**	**2653 2230**

Your Benefits:

- **Up to 40% faster lashing!**
- **Simplified Handling**

1. **Closed Ratchet** (fig. a)
2. **Open Ratchet, release lock**
3. **Insert Webbing via opened side gate** (fig. b)
4. **Close Side gate**
5. **Lock side panel with ratchet**

Step by Step Instruction

WLL 3,333 lbs / 1,515 kg

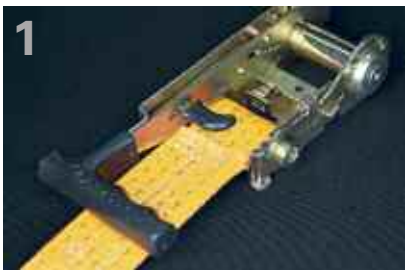

1. Closed Ratchet
In closed ratchet the side gate is locked

2. Open Ratchet, release lock
By opening the ratchet (bringing the manual lever in the release position) the locking mechanism disengages and the side gate can be opened

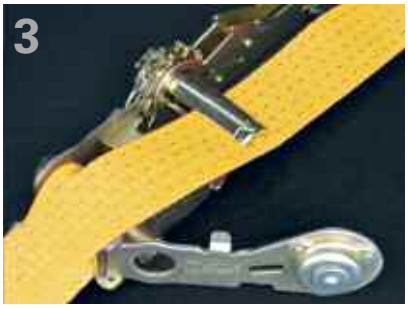

3. Insert Webbing
The webbing can easily be loaded sideways into the spool

4. Close Side gate
After the webbing is inserted, the side gate must be closed again

5. Lock side panel with ratchet
By closing the hand lever, the side gate is locked and the ratchet is ready to use

3" Ratchet Buckle Straps – WLL: 5,400 lbs/2,450 kg

with Flat Hooks

Weight:	16.49 lbs/7.48 kg	16.7 lbs/7.57 kg
Length:	27 ft	30 ft
Part No.:	**2340 4327**	**2340 4330**

with Chain Anchors

Weight:	17.1 lbs/7.76 kg	17.3 lbs/7.85 kg
Length:	27 ft	30 ft
Part No.:	**2340 5327**	**2340 5330**

with Wire Hooks

Weight:	16.7 lbs/7.57 kg
Length:	30 ft
Part No.:	**2340 6330**

4" Ratchet Buckle Straps – WLL: 5,400 lbs/2,450 kg

with Flat Hooks

Weight:	18.0 lbs/8.16 kg	18.2 lbs/8.26 kg
Length:	27 ft	30 ft
Part No.:	**2340 4427**	**2340 4430**

with Chain Anchors

Weight:	22.6 lbs/10.25 kg	22.8 lbs/10.34 kg
Length:	27 ft	30 ft
Part No.:	**2340 5427**	**2340 5430**

4" Ratchet Buckle Straps – WLL: 6,600 lbs/3,000 kg

with Narrow Wire Hooks

Weight:	18.1 lbs/8.21 kg	18.3 lbs/8.3 kg
Length:	27 ft	30 ft
Part No.:	**2340 6427**	**2340 6430**

Weight:	3.3 lbs/1.5 kg
Part No.:	**2370 0006**

Web Winder

Manufactured from durable steel, the Web Winder is the perfect tool to help secure your loads. Designed to keep excess webbing straps neatly organized, the Web Winder works with two, three, or four inch wide straps. It is easy to install, easy to remove, and easy to disassemble. Light weight and compact means ease of storage as well.

DoPremium – Engineered for Strength and Durability

Doleco Ratchet Buckle Strap Assemblies have redefined the industry standard. Now with the tested and proven 80% retained strength of Doleco's DoPremium webbing and the integrity of our ratchet buckles, these assemblies surpass the others. A complete line of Doleco's standard and heavy-duty assemblies and accessories can meet all your specific requirements.

- Custom lengths and a wide range of end hardware are available
- Complies with WSTDA T-1 Standards
- Webbing meets or exceeds WSTDA T-4 Standards
- Standard fixed end length is 18-in. (33 in. for chain anchor) unless otherwise specified

DoPremium 2" Ratchet Buckle Straps WLL: 3,333 lbs/1,515 kg

with Flat Hooks

Weight:	7.0 lbs/3.18 kg	7.2 lbs/3.27 kg
Length:	27 ft	30 ft
Part No.:	**2341 0227**	**2341 0230**

with Chain Anchors

Weight:	12.7 lbs/5.76 kg	12.9 lbs/5.85 kg
Length:	27 ft	30 ft
Part No.:	**2341 3227**	**2341 3230**

with Wire Hooks

Weight:	7.0 lbs/3.18 kg	7.2 lbs/3.27 kg
Length:	27 ft	30 ft
Part No.:	**2341 2227**	**2341 2230**

DoPremium 3" Ratchet Buckle Straps WLL: 5,400 lbs/2,450 kg

with Flat Hooks

Weight:	16.5 lbs/7.48 kg	16.7 lbs/7.57 kg
Length:	27 ft	30 ft
Part No.:	**2341 4327**	**2341 4330**

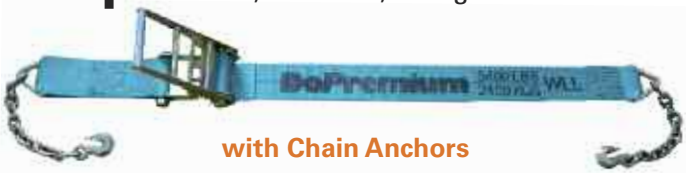

with Chain Anchors

Weight:	17.1 lbs/7.76 kg	17.3 lbs/7.85 kg
Length:	27 ft	30 ft
Part No.:	**2341 5327**	**2341 5330**

DoPremium 4" Ratchet Buckle Straps WLL: 5,400 lbs/2,450 kg

with Flat Hooks

Weight:	19.8 lbs/8.98 kg	20.0 lbs/9.07 kg
Length:	27 ft	30 ft
Part No.:	**2341 4427**	**2341 4430**

with Chain Anchors

Weight:	24.9 lbs/11.29 kg	25.1 lbs/11.39 kg
Length:	27 ft	30 ft
Part No.:	**2341 5427**	**2341 5430**

with Wire Hooks

Weight:	19.9 lbs/9.03 kg	20.1 lbs/9.12 kg
Length:	27 ft	30 ft
Part No.:	**2341 6427**	**2341 6430**

Heavy Duty Tarp Ties

Made in the USA and known for quality, durability, and resistance to weather, these tarp ties offer good stretch recovery and maintain their strength over the entire life of the tarp ties. The DoPremium domestic tarp ties offer the longest lasting, larger cross section, recognized by heavy duty truckers throughout North America.
They all offer exceptional strength and costs that compete with import tarp ties. All hooks are made in the USA from wire coils.

- Quantity 50 per box
- Designed to hold tarp covers on trucks and trailers
- Not to be used to restrain or secure cargo
- Wear safety glasses and use caution when using tarp ties
- Molded EPDM construction for high Ozone resistance and strength resiliency or molded natural rubber for good cold weather stretch properties

Natural Rubber

Made in USA

Length:	Part No.:	Weight:
10"	**2864 0010**	10.0 lbs/4.54kg
15"	**2864 0015**	12.0 lbs/5.44kg
21"	**2864 0021**	15.0 lbs/6.8 kg
31"	**2864 0031**	19.0 lbs/8.62 kg
41"	**2864 0041**	23.0 lbs/10.43kg

High Quality Tarp Ties/HD EPDM

DoPremium Made in USA

Length:	Part No.:	Weight:
10"	**2862 0010**	10.0 lbs/4.54kg
15"	**2862 0015**	12.0 lbs/5.44kg
21"	**2862 0021**	15.0 lbs/6.8 kg
31"	**2862 0031**	19.0 lbs/8.62 kg
41"	**2862 0041**	23.0 lbs/10.43kg

EPDM

IMPORT

Length:	Part No.:	Weight:
10"	**2861 0010**	10.0 lbs/4.54kg
15"	**2861 0015**	12.0 lbs/5.44kg
21"	**2861 0021**	15.0 lbs/6.8 kg
31"	**2861 0031**	19.0 lbs/8.62 kg
41"	**2861 0041**	23.0 lbs/10.43kg

Rubber rope and Hooks

	Lenght/Quantity	Part No.:	Weight:
3/8" Solid Core	**200' Roll**	**2863 0001**	10.7 lbs/4.85 kg
7/16" Solid Core	**150' Roll**	**2863 0002**	7.4 lbs/3.36 kg
Rubber Rope Hooks	**100 pc Bag**	**2863 0003**	5.2 lbs/2.36 kg

Corner Protectors

Full line of corner protectors to protect your straps and cargo

Fiber Reinforced Rubber – For up to 3″ web straps

Weight:	.63 lbs/.29 kg
Part No.:	**2330 0003**

Fiber Reinforced Rubber – For up to 4″ web straps

Weight:	.75 lbs/.34 kg
Part No.:	**2330 0004**

12" Plastic – For up to 3″ web straps

Weight:	.47 lbs/.21 kg
Part No.:	**2330 0009**

Steel – For use with chain

Weight:	1.10 lbs/.50 kg
Part No.:	**2330 0006**

Steel – For use with chain and straps

Weight:	.1.26 lbs/.86 kg
Part No.:	**2330 0010**

Rubber Coated Steel – For use with chain and extends 4" to protect load

Weight:	1.90 lbs/.29 kg
Part No.:	**2330 0007**

High Density Polymer – For up to 4" web straps

Weight:	.06 lbs/.03 kg
Part No.:	**2330 0005**

Tarp Protector –Yellow plastic

Weight:	.63 lbs/.29 kg
Part No.:	**2330 0011**

DoPremium Guard

DoPremium VeeBoards® are manufactured from ultra strong, crack resistant, high-density polyethylene and have been tried and tested all over the world. They are light weight, user friendly and long lasting, making them ideal for the rough and tough trucking industry. While being strong enough to hold a load of drums in place, they are also flexible enough to bend when the cargo is not of a uniform shape.

DOT requirements specify that all loads should be secured in such a way as to assure that no pieces come loose, endangering those behind. Also, DoPremium VeeBoards MUST be used if the strap is in any danger of being cut or damaged by the freight.

- Lighter than steel
- Last 10 times longer than wood
- Stack efficiently
- Spread the pressure of the strap over 12", 24", 36" or 48"
- Unlike aluminum they will bend, then return to their original shape
- Weather resistant
- Do not crack in freezing temperatures, will not burn your hands in hot temperatures.
- Cost efficient
- Made in various colors
- Do little or no damage if they come loose

Length:	8" x 12"
Weight:	.8 lbs/.36 kg
Part No.:	**2850 0012**

Length:	8" x 24"
Weight:	1.7 lbs/.78 kg
Part No.:	**2850 0024**

Length:	8" x 36"
Weight:	2.7 lbs/1.23 kg
Part No.:	**2850 0036**

Length:	8" x 48"
Weight:	3.6 lbs/1.63 kg
Part No.:	**2850 0048**

Anti-Slip Mats

Anti-Slip Mats increase the coefficient of friction between the load and the load bearing surface. This increases load stability and security, and reduces the number of lashing devices required to secure the load. Several sizes available to choose from.

Rubber Friction Mat
30" x 42"

Weight:	3.5 lbs/1.59 kg
Part No.:	**2370 0008**

Please contact customer service for more information like Part No., Dimensions, Thickness, Price.

Flags and Banners

Double-sided banner, „Wide load“ and „Oversize load“, Vinyl Fabric, with 4 Ropes

Size:	Part No.:	Weight:
18“x 84“	**2800 0006**	1.2 lbs/0.54 kg

Double-sided banner, „Wide load“ and „Oversize load“, Durable Vinyl Fabric, with 4 Ropes

Size:	Part No.:	Weight:
14“x 72“	**2800 0008**	0.8 lbs/0.36 kg

One-sided banner, „Wide load“ Mesh, with 4 Ropes

Size:	Part No.:	Weight:
18“x 84“	**2800 0010**	0.8 lbs/0.36 kg

Double-sided banner, „Wide load“ and „Oversize load“, Mesh with 4 Ropes

Size:	Part No.:	Weight:
18“x 84“	**2800 0009**	0.8 lbs/0.36 kg

Double-sided banner, „Wide load“ and „Oversize load“, Durable Vinyl Fabric, with 4 Ropes

Size:	Part No.:	Weight:
18“x 84“	**2800 0007**	1.3 lbs/0.59 kg

Canadian D Sign, Durable Vinyl Fabric, 10 Attachment Points

Size:	Part No.:	Weight:
12“x 96“	**2800 0011**	0.8 lbs/0.36 kg

Heavy Duty Mesh Flag (Fluorescent, with 2 Brass Grommets)

Size:	Part No.:	Weight:
18“x 18“	**2800 0003**	0.2 lbs/0.09 kg

PVC coated Orange Flag with Grommets

Size:	Part No.:	Weight:
18“x 18“	**2800 0005**	0.2 lbs/0.09 kg

Cotton Flag with Steel Rod

Size:	Part No.:	Weight:
18“x 18“	**2800 0002**	0.2 lbs/0.09 kg

Heavy Duty Mesh Flag (Fluorescent)

Size:	Part No.:	Weight:
18“x 18“	**2800 0001**	0.4 lbs/0.18 kg

PVC coated Orange Flag and Wooden Dowel

Size:	Part No.:	Weight:
18“x 18“	**2800 0004**	0.2 lbs/0.09 kg

Logistic Track

Doleco Series E, A and F Track were designed to team with Doleco end fittings, Beam Sockets and Decking/Shoring Beams for the strongest, most reliable support. Steel constructed and tested for strength, Doleco Track comes in 10 ft. (3 m) lengths for a wide range of cargo restraint applications. To withstand corrosion, Doleco galvanized track has a G-90 hot dip finish with a surface chemical treatment.

Series E Logistic Track Made with high grade 12-gauge steel

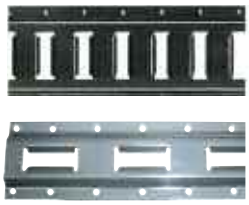

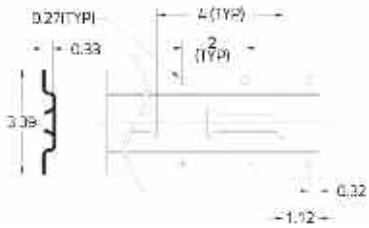

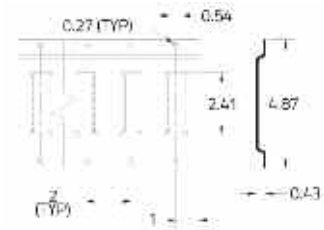

Grey Powdercoat

Horizontal	Weight:	16.6 lbs/7.5 kg	8.3 lbs/7.5 kg
	Length:	10 ft/3 m	5 ft/1.5 m
	Part No.:	**3310 0008**	**3310 0009**

Vertical	Weight:	13.5 lbs/6.1 kg
	Length:	10 ft/3 m
	Part No.:	**3310 0001**

Galvanized

Horizontal	Weight:	17.2 lbs/7.8 kg	8.3 lbs/7.5 kg
	Length:	10 ft/3 m	5 ft/1.5 m
	Part No.:	**3310 0010**	**3310 0011**

Vertical	Weight:	14.0 lbs/6.4 kg
	Length:	10 ft/3 m
	Part No.:	**3310 0002**

Series A Logistic Track

Grey Powdercoat – 12-gauge

Weight:	Length:	Part No.:
15.0 lbs/6.8 kg	10 ft/3 m	**3310 0005**

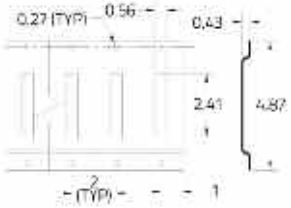

Series F Logistic Track

Galvanized

1.62" hole spacing, 3/4" hole dia., 15-gauge

Weight:	Length:	Part No.:
6.0 lbs/2.7 kg	10 ft/3 m	**3310 0004**

Shoring Bars F Series with new easy push button design

Square Shoring Bar

Adjustable in 2" increments with recommended install length of 81" – 117"

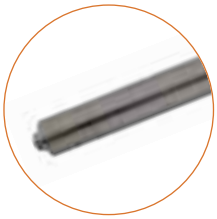

	for 3/4" hole diameter track (U.S.)	for 1" hole diameter track (Canada)	for 10" hole (Canada)
Shoring WLL:	1000 lbs/454 kg	1000 lbs/454 kg	1000 lbs/454 kg
Weight:	20.0 lbs/9.1 kg	20.0 lbs/9.1 kg	20.0 lbs/9.1 kg
Part No.:	3320 0005	**3320 0004**	**3310 0003**

Round Shoring Bar

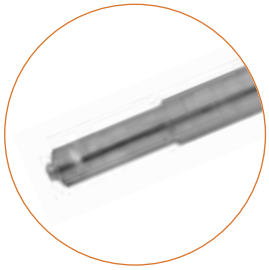

	for 3/4" hole diameter track (U.S.)	for 1" hole diameter track (Canada)
Shoring WLL:	1000 lbs/454 kg	1000 lbs/454 kg
Weight:	28.0 lbs/12.71 kg	28.0 lbs/12.71 kg
Part No.:	**3320 0003**	**3320 0006**

Clamping Bars

Telescope bars made of galvanized steel, with antiskid rubber feet on each side

Please contact customer service for more information like adjustable range, Part No., Price.

Series E and A Decking/Shoring Beams

All Doleco Decking/Shoring Beams are equipped with our patented Flat Latch. The Flat Latch eliminates bent triggers, jammed beams, costly beam replacement and repairs, and out-of-service problems. The Flat Latch can't damage interior trailer walls. The flat latch channel assembly can be purchased separately to retro-fit older trigger style beams.

Standard Duty Aluminum E and A Decking Beams
Decking & Shoring WLL: 2,200 lbs

Adjustment range:	Weight:	Part No.:
85.7" – 96.6"	16.0 lbs/7.27 kg	**3320 0007**
92.9" – 103.8"	18.8 lbs/8.55 kg	**3320 0008**

Heavy Duty Aluminum E and A Decking Beams
Decking WLL: 3,000 lbs/Shoring WLL: 2,500 lbs

Adjustment range:	Weight:	Part No.:
84.7" – 95.6"	20.5 lbs/9.32 kg	**3320 0009**
92.9" – 103.8"	22.5 lbs/10.23 kg	**3320 0010**
96.0" – 106.9"	24.25 lbs/11.03 kg	**3320 0011**

Cargo Bars

Available in Steel Bar models and Aluminum for light to medium duty applications. Bolt-On Feet.

Steel Cargo Bar – Galvanized Steel Tubing

Length:	Weight:	Long Tube Diameter:	Part No.:
89.75" – 104.5"	11.72 lbs/5.33 kg	1.50"	**3320 0019**

Aluminum Cargo Bar – 6061 T6 Aluminum

Length:	Weight:	Long Tube Diameter:	Part No.:
89.75" – 104.5"	8.95 lbs/4.07 kg	1.50"	**3320 0016**

Jack Bars

Doleco's jack mechanism makes quick work of securing loads and is available in two lengths.

Heavy Duty One-Piece – Galvanized finish for corrosion resistance.

Adjustment range:	Weight:	Part No.:
85.0″ – 104.0″ Black Handle	16.2 lbs/7.35 kg	**3320 0020**
85.0″ – 114.0″ Red Handle	16.6 lbs/7.54 kg	**3320 0021**

Heavy-Duty One-Piece Jack Bar with Hoops

Built-in hoops for restraining small items and packages.
One-Piece galvanized.

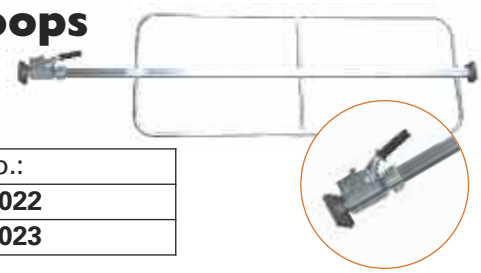

Adjustment range:	Weight:	Part No.:
85.0″ – 114.0″ Red Handle	20.0 lbs/9.08 kg	**3320 0022**
85.0″ – 104.0″ Black Handle	19.6 lbs/9.0 kg	**3320 0023**

Accessories

Cargo Bar Hoop Set

Designed to help restrain the movement of small packages of cargo within your truck or trailer. For 3320 0016 and 3320 0019 round tube bars. Tube Diameter: 1.5″.

Weight:	10.0 lbs/4.5 kg
Part No.:	**3320 0017**

Standard Beam Socket

For use w/commercial grade Douglas Fir 2″x 6″ lumber.

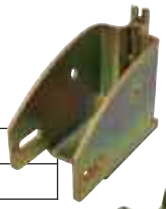

Weight:	.70 lbs/.32 kg
Part No.:	**3320 0001**

Beam Socket Heavy Duty

Weight:	0.85 lbs/0.39 kg
Part No.:	**3320 0002**

Cargo Bar Holder

Constructed of high quality steel and finished with black powder coating for corrosion resistance. Holds two standard or heavy-duty cargo bars.

Weight:	6.68 lbs/3.03 kg
Part No.:	**3320 0025**

Series E/A Rope Tie Off

With spring actuated fitting for rope use in Series E or A track. WLL: 1,333 lbs/605 kg.

Weight:	.40 lbs/.18 kg
Part No.:	**3330 0002**

Pan Fitting

Weight:	0.3 lbs / 0.14 kg
WLL:	530 lbs / 239 kg
Part No.:	**3330 0005**

Recessed Pan Fitting

Weight:	1.2 lbs / 0.54 kg
WLL:	1,666 lb / 750 kg
Part No.:	**3330 0006**

Patented Reversible Channel Assembly

3320 0035 can be used even if damaged by simply reversing it in the aluminum tube.

With two latches

Weight:	3.8 lbs/1.73 kg
Part No.:	**3320 0035**

Standard version

Weight:	3.8 lbs/1.73 kg
Part No.:	**3320 0032**

Series E Cam Buckle Straps with Spring End Fittings

Popular straps for securing light to medium loads. Comes in 3 color coded sizes. WLL: 833 lbs/378 kg.

Yellow Webbing

Weight:	1.65 lbs/.75 kg
Length:	12 ft/365.76 cm
Part No.:	**3350 0212**

Grey Webbing

Weight:	1.80 lbs/.82 kg
Length:	16 ft/487.68 cm
Part No.:	**3350 0216**

Blue Webbing

Weight:	1.95 lbs/.88 kg
Length:	20 ft/609.60 cm
Part No.:	**3350 0220**

Series E Ratchet Buckle Straps with Spring End Fittings

Low profile ratchet buckle makes tensioning more convenient for securing loads.
Three standard color coded sizes. WLL: 1,333 lbs/605 kg.

Yellow Webbing

Weight:	2.25 lbs/1.02 kg
Length:	12 ft/365.76 cm
Part No.:	**3350 0712**

Grey Webbing

Weight:	2.40 lbs/1.09 kg
Length:	16 ft/487.68 cm
Part No.:	**3350 0716**

Blue Webbing

Weight:	2.55 lbs/1.16 kg
Length:	20 ft/609.60 cm
Part No.:	**3350 0720**

Ratchet Strap Assemblies for Interior Van

Heavy Duty Ratchet Buckle Strap, with Spring End Fitting, WLL: 1,333 lbs/0,605 kg

Weight:	3.5 lbs/1.59 kg	4.0 lbs/1.81 kg	5.0 lbs/2.27 kg
Length:	12 ft	16 ft	20 ft
Part No.:	**3351 0712**	**3351 0716**	**3351 0720**

Auto Tiedown Serie E Transit Strap with RTJ Hook, WLL: 1,000 lbs / 454 kg

Weight:	6.0 lbs/2.72 kg	6.5 lbs/2.95 kg	7.5 lbs/3.4 kg
Length:	6 ft	8 ft	12 ft
Part No.:	**3340 0010**	**3340 0011**	**3340 0012**

Utility Tiedowns

Versatile and reliable for securing a wide range of light- to medium-duty cargo.

Cam Buckle Tiedown

1" x 5 – 1/2' Red, vinyl coated S Hooks, Fixed End: 6"

WLL:	400 lbs/181 kg
Weight:	1.60 lbs/.73 kg
Part No.:	**3800 0008**

Mini Ratchet Strap with D-Rings and Wire Hooks

WLL: 1,000 lbs/454 kg
Packaged with header card and bag

Size:	Weight:	Part No.:
1″x16'	1.56 lbs/.71 kg	**3800 0010**
1″x20'	1.69 lbs/.77 kg	**3800 0011**

Ratcheting Tiedowns

1" x 10', 2-pack, 1" black Ratchet straps with vinyl coated S Hooks in an interactive package.

WLL:	550 lbs/250 kg
Weight:	2.25 lbs/1.0 kg
Part No.:	**3800 0002**

Ratcheting and Cam Tiedowns

Contains two each 1″ multi-purpose Ratchet and Cam Buckle tie downs with scratch-resistant vinyl coating.

WLL:	500 lbs/227 kg
Weight:	3.20 lbs/1.45 kg
Part No.:	**3800 0006**

Cam Buckle Tiedowns

1" x 8', 4-pack, 1" red Cam straps with scratch-resistant vinyl coated S Hooks in an interactive package.

WLL:	400 lbs/180 kg
Weight:	3.8 lbs/1.72 kg
Part No.:	**3800 0004**

Ratcheting Tiedowns

1″ x 10′, 4-pack, 1″ black Ratchet straps with vinyl coated S Hooks in an interactive package.

WLL:	550 lbs/250 kg
Weight:	4.6 lbs/2.1 kg
Part No.:	**3800 0005**

Cam Buckle Tiedowns

1″x 8′, 2-pack, 1″ Cam straps with scratch-resistant vinyl coated S Hooks in an interactive package.

WLL:	400 lbs/181.44 kg
Weight:	1.9 lbs/.86 kg
Part No.:	**3800 0001**

4-pack, Strap Assembly
Ratchet Buckle with vinyl coated S Hooks

WLL:	266 lbs/121 kg
Size:	1″x 15'
Weight:	4.7 lbs/2.13 kg
Part No.:	**3800 0015**

Ratchet Strap with Wire Hooks

WLL:	1,000 lbs/454 kg
Size:	1″x 10'
Weight:	1.6 lbs/0.73 kg
Part No.:	**3800 0013**

Ratchet Strap with S Hooks, with Clamshell Packaging

WLL:	400 lbs/182 kg
Size:	1″x 14'
Weight:	1.0 lbs/0.45 kg
Part No.:	**3800 0018**

Ratchet Strap with S Hooks, Bulk

WLL:	400 lbs/182 kg
Size:	1″x 14'
Weight:	0.80 lbs/0.40 kg
Part No.:	**3800 0020**

Flat Eye to Eye – Polyester Slings

- Light Weight & Economical
- 9,800 lbs. Polyester Webbing
- Single-Ply & Double-Ply Styles
- Industry Compliant Sewn In Warning Tags
- Reinforced Eyes
- Tapered Eyes on 2", 3", & 4" Widths

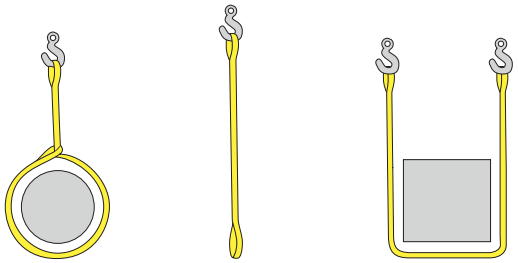

Single-Ply 9,800 lbs Twisted Eye to Eye Slings

PartNo.	Size	Choker	Vertical	Basket	Weight
6811 0103	1" x 3'	1,250	1,600	3,200	0.35 lbs/0.16 kg
6811 0104	1" x 4'	1,250	1,600	3,200	0.42 lbs/0.19 kg
6811 0106	1" x 6'	1,250	1,600	3,200	0.53 lbs/0.24 kg
6811 0110	1" x 10'	1,250	1,600	3,200	0.75 lbs/0.34 kg
6811 0203	2" x 3'	2,500	3,200	6,400	0.75 lbs/0.34 kg

PartNo.	Size	Choker	Vertical	Basket	Weight
6811 0204	2" x 4'	2,500	3,200	6,400	0.88 lbs/0.40 kg
6811 0206	2" x 6'	2,500	3,200	6,400	1.08 lbs/0.49 kg
6811 0210	2" x 10'	2,500	3,200	6,400	1.48 lbs/0.67 kg
6811 0212	2" x 12'	2,500	3,200	6,400	1.80 lbs/0.82 kg
6811 0214	2" x 14'	2,500	3,200	6,400	2.00 lbs/0.91 kg

Double-Ply 9,800 lbs Twisted Eye to Eye Slings

PartNo.	Size	Choker	Vertical	Basket	Weight
6812 0104	1" x 4'	2,500	3,200	6,400	0.57 lbs/0.26 kg
6812 0108	1" x 8'	2,500	3,200	6,400	1.00 lbs/0.45 kg
6812 0203	2" x 3'	5,000	6,400	12,800	0.80 lbs/0.36 kg
6812 0204	2" x 4'	5,000	6,400	12,800	0.97 lbs/0.44 kg
6812 0206	2" x 6'	5,000	6,400	12,800	1.32 lbs/0.60 kg
6812 0208	2" x 8'	5,000	6,400	12,800	1.72 lbs/0.78 kg
6812 0210	2" x 10'	5,000	6,400	12,800	2.10 lbs/0.95 kg
6812 0212	2" x 12'	5,000	6,400	12,800	2.43 lbs/1.11 kg
6812 0216	2" x 16'	5,000	6,400	12,800	2.70 lbs/1.225 kg
6812 0220	2" x 20'	5,000	6,400	12,800	3.75 lbs/1.70 kg
6812 0230	2" x 30'	5,000	6,400	12,800	5.80 lbs/2.63 kg

PartNo.	Size	Choker	Vertical	Basket	Weight
6812 0310	3" x 10'	6,900	8,600	17,200	2.65 lbs/1.2 kg
6812 0312	3" x 12'	6,900	8,600	17,200	3.09 lbs/1.4 kg
6812 0316	3" x 16'	6,900	8,600	17,200	4.10 lbs/1.86 kg
6812 0320	3" x 20'	6,900	8,600	17,200	5.07 lbs/2.30 kg
6812 0406	4" x 6'	9,200	11,500	23,000	2.18 lbs/0.99 kg
6812 0408	4" x 8'	9,200	11,500	23,000	2.73 lbs/1.24 kg
6812 0410	4" x 10'	9,200	11,500	23,000	3.30 lbs/1.5 kg
6812 0412	4" x 12'	9,200	11,500	23,000	3.85 lbs/1.75 kg
6812 0416	4" x 16'	9,200	11,500	23,000	5.0 lbs/2.26 kg
6812 0420	4" x 20'	9,200	11,500	23,000	6.12 lbs/2.78 kg
6812 0430	4" x 30'	9,200	11,500	23,000	8.82 lbs/4.0 kg

Wire Rope Slings for all types of applications

Contact us for specifications and pricing.

Polyester Round Slings

- Light Weight & Durable
- Low Stretch Properties for Optimum Use in Low Headroom Applications
- Continuous Looped Polyester Load Yarns Inside
- Abrasion Resistant Double Wall Polyester Protective Cover
- Color Coded to Industry Capacity Standards
- Industry Compliant Sewn Warning Tags

Part No.	Straight Length	Color	Rated Capacity / lbs. Choker	Vertical	Basket	Weight
6820 0103	1" x 3'	Purple	2,100	2,600	5,200	0.9 lbs / 0.41 kg
6820 0104	1" x 4'	Purple	2,100	2,600	5,200	1.2 lbs / 0.54 kg
6820 0106	1" x 6'	Purple	2,100	2,600	5,200	1.8 lbs / 0.82 kg
6820 0108	1" x 8'	Purple	2,100	2,600	5,200	2.4 lbs / 1.09 kg
6820 0110	1" x 10'	Purple	2,100	2,600	5,200	3.0 lbs / 1.36 kg
6820 0112	1" x 12'	Purple	2,100	2,600	5,200	3.6 lbs / 1.63 kg
6820 0203	2" x 3'	Green	4,200	5,300	10,600	1.2 lbs / 0.54 kg
6820 0204	2" x 4'	Green	4,200	5,300	10,600	1.6 lbs / 0.73 kg
6820 0208	2" x 8'	Green	4,200	5,300	10,600	3.2 lbs / 1.45 kg
6820 0210	2" x 10'	Green	4,200	5,300	10,600	4.0 lbs / 1.81 kg
6820 0212	2" x 12'	Green	4,200	5,300	10,600	4.8 lbs / 2.18 kg
6820 0220	2" x 20'	Green	4,200	5,300	10,600	8.0 lbs / 3.63 kg
6820 0303	3" x 3'	Yellow	6,700	8,400	16,800	1.8 lbs / 0.82 kg
6820 0304	3" x 4'	Yellow	6,700	8,400	16,800	2.4 lbs / 1.09 kg
6820 0306	3" x 6'	Yellow	6,700	8,400	16,800	3.6 lbs / 1.63 kg
6820 0308	3" x 8'	Yellow	6,700	8,400	16,800	4.8 lbs / 2.18 kg
6820 0310	3" x 10'	Yellow	6,700	8,400	16,800	6.0 lbs / 2.72 kg
6820 0312	3" x 12'	Yellow	6,700	8,400	16,800	7.2 lbs / 3.27 kg
6820 0320	3" x 20'	Yellow	6,700	8,400	16,800	12.01 lbs / 5.44 kg
6820 0410	4" x 10'	Tan	8,500	10,600	21,200	7.0 lbs / 3.18 kg
6820 0416	4" x 16'	Tan	8,500	10,600	21,200	11.2 lbs / 5.08 kg
6820 0504	5" x 4'	Red	10,600	13,200	24,400	3.2 lbs / 1.45 kg
6820 0506	5" x 6'	Red	10,600	13,200	24,400	4.8 lbs / 2.18 kg
6820 0508	5" x 8'	Red	10,600	13,200	24,400	6.4 lbs / 2.9 kg
6820 0510	5" x 10'	Red	10,600	13,200	24,400	8.0 lbs / 3.63 kg
6820 0512	5" x 12'	Red	10,600	13,200	24,400	9.61 lbs / 4.35 kg
6820 0520	5" x 20'	Red	10,600	13,200	24,400	16.1 lbs / 7.26 kg
6820 0706	7" x 6'	Blue	17,000	21,200	42,400	9.61 lbs / 4.35 kg
6820 0708	7" x 8'	Blue	17,000	21,200	42,400	12.81 lbs / 5.81 kg
6820 0710	7" x 10'	Blue	17,000	21,200	42,400	16.0 lbs / 7.26 kg
6820 0712	7" x 12'	Blue	17,000	21,200	42,400	19.21 lbs / 8.71 kg
6820 0720	7" x 20'	Blue	17,000	21,200	42,400	32.01 lbs / 14.51 kg

Warnings

Please read and comply with all warnings on labels and packaging. Failure to do so may result in loss of load or serious property damage and/or personal injury. Always inspect slings for damage and excessive wear prior to using. DO NOT USE if fibers are cut, burned, melted or have been exposed to unknown chemicals. DO NOT USE if wires are broken or severely deformed or if eye crimps have become loose or broken. Discard and replace appropriately. For Operating and Inspection Manuals for Synthetic Web Slings, see the Web Sling & Tie-Down Association Publication WSTDA-WS-2 at www.wstda.com. For Operating and Inspection Manuals for Polyester Round Slings, see the Web Sling & Tie-Down Association Publication WSTDA-RS-2 at www.wstda.com.
For Operating and inspection Requirements for Wire Rope Slings, see OSHA Part 1910.184 Slings or Contact the Association of Wire Rope Fabricators AWRF at www.awrf.org.

DoPremium Eye Slings

DoPremium Eye Slings are the highest quality Eye Slings we have to offer. Improvements over our standard Eye Slings include: higher temperature resistance (up to 150° C), higher abrasion resistance, higher compression resistance, and overall longer service life. All DoPremium Eye Slings come standard with fully reinforced eyes. Please contact us for pricing.

Item No.	WLL Single (lbs/kg)	WLL Double (lbs/kg)	Band Width x Thickness (in/mm)	Length of Eye (in/mm)	Width of Eye (in/mm)	Min. Length (in/mm)
0567 9602	2204/1000	4409/2000	1.97 x 0.24/50 x 6	7.87/200	.98/25	33.46/850
0567 9752	4409/2000	8818/4000	2.95 x 0.31/75 x 8	11.81/300	.98/25	51.18/1300
0567 9782	6613/3000	13227/6000	3.94 x 0.31/100 x 8	13.78/350	1.38/35	59.01/1500
0567 9852	8818/4000	17636/8000	4.92 x 0.31/125 x 8	16.73/425	1.77/45	62.99/1600
0567 0002	11023/5000	22046/10000	5.91 x 0.39/150 x 10	19.69/500	1.97/50	74.80/1900

DoPremium Wire Rope Slings

DoPremium Wire Rope Slings take the benefits of various other Wire Rope Slings and combine them all into one great product.
Our DoPremium Wire Rope Slings feature better flexibility in load handling, cone splices for easier manipulation around loads, and a color coding system for easy differentiation. All these features combine to give these slings a very high level of safety. Please contact us for pricing.

Item No.	Nominal Diameter (in/mm)	Load Capacity (lbs/kg)
6261 1301	.51/13	4409/2000
6261 1601	.63/16	6613/3000
6261 2001	.79/20	11023/5000

Please contact customer service for more information like Part No., Dimensions, Thickness, Price.

DoPremium Round Slings

DoPremium Round Slings are an improvement over our standard Round Slings.
The covers are made of a thicker, improved webbing that is more abrasion resistant and less prone to wrinkling.
In addition, each Round Sling comes with the WLL woven into the fabric for easy, permanent, identification. These Round Slings offer the best performance, safety, and service life of any Round Sling we have to offer. Please contact us for pricing.

Item No.	WLL Single (lbs/kg)
0514 0552	2204/1000
0514 1552	4409/2000
0514 3552	6613/3000
0514 4552	8818/4000
0514 5552	11023/5000
0514 6052	13227/6000
0514 7552	17636/8000
0514 8052	22046/10000
0514 9152	26455/12000
0514 9352	33069/15000

Heavy Duty Roundslings

DoPremium WITH Dyneema®

When Lifting Slings with extreme high carrying capacities are needed Roundslings made with Dyneema® are the best choice. Through this high performance fibres an own weight reduction of 60% is achieved.

The lower elongation of Dyneema® in comparison to Polyester-fibres lead to an improved dimensional accuracy. This becomes relevant when lifting asymmetrical loads.

Dyneema® Rope Sling

DoPremium WITH Dyneema®

Our 12-times braided Dyneema®-Lifting slings are as standard available up to WLL 100 t. Higher carrying capacities up to 400 t are possible.
These ropes are lightweight and handy. Rigging has never been easier!

Sharp Edge Protection

DoPremium WITH Dyneema®

Dyneema® Protection tubes offer the optimum sharp edge protection for Weblings and Roundslings.
This clearly extends the lifetime of textile Lifting Slings and allows their use at load with sharp edges at all.

Dyneema® is a trademark of DSM.
Use of this trademark is prohibited unless strictly authorized.

Tie-down DoPremium with Dyneema®

DoPremium

These ratchet tie downs are made for the roughest purposes. DoPremium with Dyneema®-Tie downs can be used without any additional webbing protector because the Dyneema® webbing is highly resistant against cuts and abraision.
The longer lifetime saves money!

Heavy Duty Tie Down

DoPremium

The powerhouse for direct lashing with 1,110 lbs / 5,000 kg and only 2 inch webbing width.
This extraordinary high lashing capacity is achieved by high value components in combination with Dyneema® webbing. Substitute your Lashing Chains and benefit from low weight and easy handling!

DoFlex1 Abrasion Protection

Innovative: The elastic PES-tube for tie downs reliable protects the webbing against wear and tear.

DoFlex2

Abrasion Protection with Dyneema®

Extra tough; The Elastic weaving construction made of Dyneema® fibres makes the DoFlex2-Protection tube to an ideal webbing protector for all kind of purposes.

Dyneema® is a trademark of DSM.
Use of this trademark is prohibited unless strictly authorized.

Cam Buckles

1", WLL 500 lbs / 227 kg

Weight:	0.25 lbs / 0.11 kg
Part No.:	**5810 0004**

2", WLL 1,000 lbs / 454 kg

Weight:	0.69 lbs / 0.31 kg
Part No.:	**5810 0001**

Ratchet Buckles, 1"

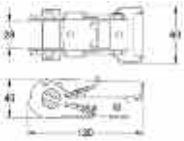

WLL 1,466 lbs

Weight:	0.76 lbs / 0.34 kg
Part No.:	**5820 0001**

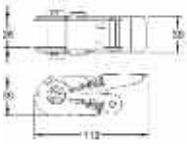

WLL 500 lbs

Weight:	0.5 lbs / 0.22 kg
Part No.:	**5820 0003**

WLL 1,100 lbs

Weight:	1.0 lbs / 0.45 kg
Part No.:	**5820 0015**

Ratchet Buckles, 2"

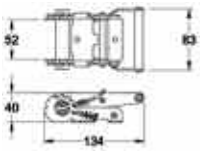

Low Profile, WLL 1,500 lbs

Weight:	1.3 lbs / 0.59 kg
Part No.:	**5820 0005**

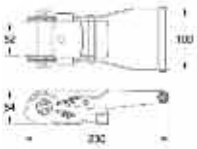

Long Wide Handle, WLL 3,666 lbs

Weight:	2.3 lbs / 1.05 kg
Part No.:	**5820 0006**

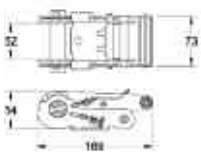

Standard Handle, WLL 3,666 lbs

Weight:	2.1 lbs / 0.95 kg
Part No.:	**5820 0007**

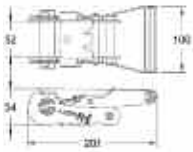

Short Wide Handle, WLL 3,666 lbs

Weight:	2.2 lbs / 1.0 kg
Part No.:	**5820 0008**

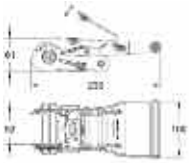

Web Keeper LWH WLL 3,666 lbs

Weight:	2.35 lbs / 1.07 kg
Part No.:	**5820 0011**

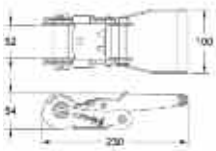

Long Wide Handle, WLL 3,666 lbs

Weight:	2.4 lbs / 1.1 kg
Part No.:	**5820 0014**

Ratchet Buckles, 3 & 4"

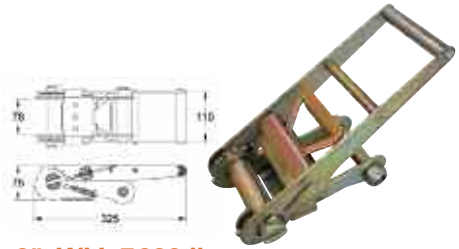

3", WLL 7,333 lbs

Weight:	7.0 lbs / 3.18 kg
Part No.:	**5820 0012**

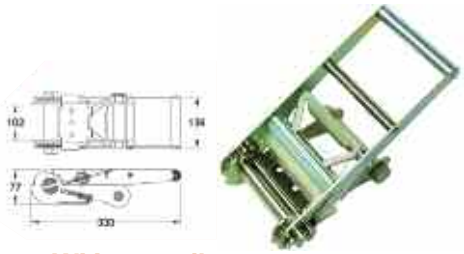

4", WLL 8,000 lbs

Weight:	8.0 lbs / 3.63 kg
Part No.:	**5820 0013**

Wire Hooks

Narrow 1", WLL 1,000 lbs

Weight:	0.10 lbs / 0.05 kg
Part No.:	**5841 0002**

Narrow 2", WLL 1,666 lbs

Weight:	0.39 lbs / 0.18 kg
Part No.:	**5841 0009**

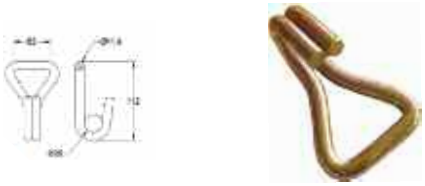

Narrow 2", WLL 3,333 lbs

Weight:	0.62 lbs / 0.28 kg
Part No.:	**5841 0010**

Narrow 2", WLL 3,333 lbs

Weight:	0.62 lbs / 0.28 kg
Part No.:	**5841 0014**

Narrow 3", WLL 7,333 lbs

Weight:	1.39 lbs / 0.63 kg
Part No.:	**5841 0012**

S-Hook, Plated, 1" , WLL 400 lbs

Weight:	0.28 lbs / 0.13 kg
Part No.:	**5841 0005**

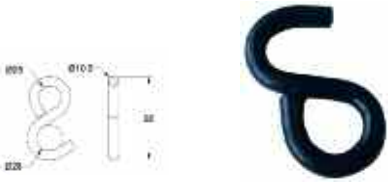

S-Hook, Vinyl, 1" , WLL 400 lbs

Weight:	0.29 lbs / 0.13 kg
Part No.:	**5841 0006**

S-Hook, Vinyl, 1", WLL 600 lbs

Weight:	0.30 lbs / 0.14 kg
Part No.:	**5841 0007**

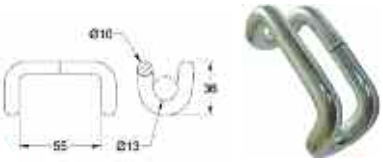

Rave-Hook, Vinyl, 1" , WLL 1.167 lbs

Weight:	0.29 lbs / 0.13 kg
Part No.:	**5841 0013**

Flat Hooks

2"

Weight:	0.41 lbs/0.19 kg
WLL	1666 lb
PN	**5842 0007**

2"

Weight:	0.41 lbs/0.19 kg
WLL	1666 lb
PN	**5842 0011**

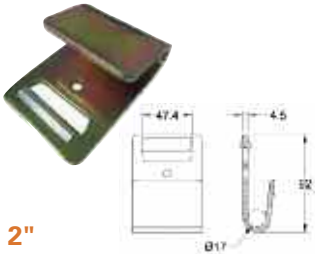

2"

Weight:	0.71 lbs/0.32 kg
WLL	3,333 lb
PN	**5842 0004**

3"

Weight:	1.0 lbs/0.45 kg
WLL	5,400 lb
PN	**5842 0005**

Snap Hooks

2" sling hook

Weight:	2.2 lbs/1 kg
WLL	5,400 lb
PN	**5842 0009**

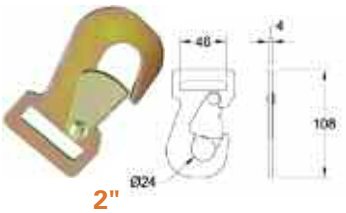

2"

Weight:	0.3 lbs/0.14 kg
WLL	2100 lb
PN	**5843 0001**

2"

Weight:	0.6 lbs/0.27 kg
WLL	3,333 lb
PN	**5843 0002**

Rings

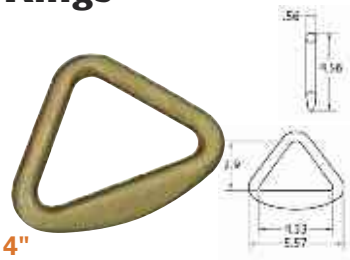

4"

Weight:	1.2 lbs/0.54 kg
WLL	6,666 lb
PN	**5844 0004**

Track Fittings

Series E Track Fitting

Weight:	0.3 lbs/0.14 kg
WLL	1,333 lbs
PN	**5845 0006**

Series E Track Fitting with D Ring

Weight:	0.4 lbs/0.18 kg
WLL	1,000 lbs
PN	**3330 0007**

Series E Track Fitting with Ring

Weight:	0.5 lbs/0.23 kg
WLL	1,000 lbs
PN	**3330 0008**

Chain Attachments

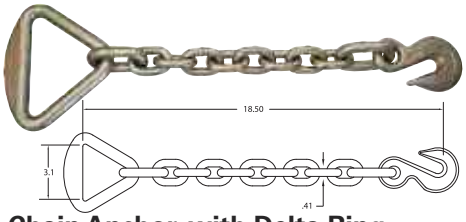

Chain Anchor, with Delta Ring, Unplated

Weight:	3.4 lbs/1.54 kg
WLL	5,400 lbs
PN	**5846 0002**

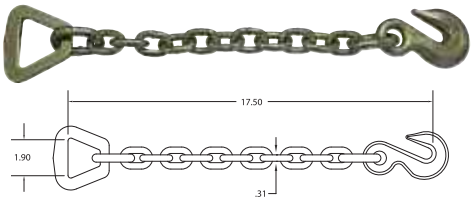

Chain Anchor 5/16"

Weight:	2.7 lbs/1.22 kg
WLL	3,333 lbs
PN	**5846 0003**

Grabhook Assembly, Unplated

Weight:	1.6 lbs/0.73 kg
WLL	5,400 lbs
PN	**5846 0001**

Webbing

Widh in:	mm	Break. Strength Cap. lbs	kg	Type	Color*	Part No.	Weight:
1"	25	4,500	2,045	Nylon, 100 yard roll	blue	**5890 0001**	1.105 lbs/0.05 kg
2"	50	6,000	2,727	Polyester, Bulk Webbing	yellow	**5890 0002**	1.165 lbs/0.07 kg
2"	50	6,000	2,727	Polyester, Bulk Webbing	grey	**5890 0003**	1.165 lbs/0.07 kg
2"	50	6,000	2,727	Polyester, Bulk Webbing	blue	**5890 0004**	1.165 lbs/0.07 kg
2"	50	12,000	5,454	Polyester, Latex Treated, Bulk Webbing	yellow	**5890 0005**	0.228 lbs/01 kg
3"	75	18,000	8,181	Polyester, Latex Treated, Bulk Webbing	yellow	**5890 0006**	0.133 lbs/0.06 kg
4"	100	20,000	9,090	Polyester, Latex Treated, Bulk Webbing	yellow	**5890 0007**	0.133 lbs/0.06 kg

* Different colors on inquiry

5890 0001

5890 0002

5890 0003

5890 0004

5890 0005

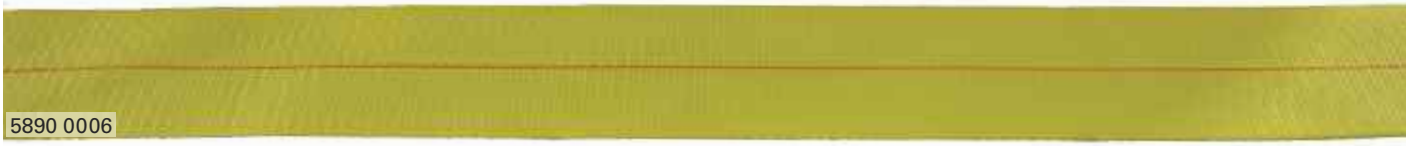
5890 0006

Warranty

Doleco USA warrants its products to be free from defect in material or workmanship for a period of twelve (12) months from the date of shipment. During this period, Doleco USA will, at its option either repair or replace any product or part thereof found to be defective in material or workmanship. This warranty is good for all product that has not been subject to modification, abuse, misuse, accident or repair. Defective product must be returned to Doleco USA or its factory location. The Company warrants that it has the right to provide the Goods but otherwise the Goods are provided on an "as-is" basis without warranty of any kind, express or implied, oral or written including, without limitation, the implied conditions of merchantable quality, fitness for purpose and description, all of which are specifically and unreservedly excluded. In particular, but without limitation, no warranty is given that the Goods are suitable for the purposes intended by the Client. The Company warrants that the Goods will be supplied using reasonable care and skill. The Company does not warrant that the Goods supplied are error-free, accurate or complete.

RECOMMENDED OPERATING, AND INSPECTION GUIDELINES FOR SYNTHETIC WEB TIE DOWNS

WARNING

Read and follow all use and safety information provided with this tie down. Failure to do so may result in severe **INJURY** or **DEATH** due to tie down failure and/or loss of load.

The following six points briefly summarize several important safety issues:

1. **All users must be trained** in tie down selection, use and inspection, cautions to personnel and environmental effects. Users must follow all applicable federal, state, provincial and local regulations and industry standards.
2. **Inspect tie down for damage** before each use. A tie down shall be removed from service if you detect any of the conditions listed on the back of this label. If you have ANY doubts about the condition of a tie down, do not use or repair it.
3. **Protect tie down from damage.** ALWAYS protect tie downs in contact with edges, corners, protrusions or abrasive surfaces with materials of sufficient strength, thickness and construction to prevent damage.
4. **Do not exceed the working load limit of the tie down**, taking into account the tie down, the load, the vehicle's anchor points, etc. Always consider the effect of tie down angle and tension on the tie down's capacity.
5. **Be alert when securing loads.** Loads must be securely blocked and stabilized before applying tension to or releasing tie downs.
6. **Maintain and store tie downs properly.** Tie downs should be protected from mechanical, chemical and environmental damage.

Inspection and Removal from Service

The **entire tie down must be inspected** before each use and it shall be **removed from service** if ANY of the following are detected:

- If tie down identification tag is missing or not readable.
- Holes, tears, cuts, snags or embedded materials.
- Broken or worn stitches in the load bearing splices.
- Knots in any part of the webbing
- Acid or alkali burns.
- Melting, charring or weld spatters on any part of the webbing.
- Excessive abrasive wear or crushed webbing.
- Signs of ultraviolet (UV) light degradation.
- Distortion, excessive pitting, corrosion or other damage to buckles or end fitting(s).
- Any conditions which cause doubt as to the strength of the tie down.

To detect possible damage, perform a visual inspection of the entire length of the tie down. Even damage that looks "minor" can significantly degrade tie down performance. If you have ANY doubts about the condition of a tie down, **DO NOT USE IT.**

Never attempt to perform temporary field repairs of damaged tie downs (e.g., tie knots in the webbing, etc.).

Use this tie down for securing cargo only. NEVER use a tie down for towing purposes. NEVER use a tie down for lifting, lowering, or suspending objects.

If you want more information about Tie Down safety, contact WSTDA to obtain copies of the Synthetic Tie Down Safety Bulletin — a companion document to this labeling. (Roundsling & Web Sling Safety Bulletins are also available)

©Web Sling & Tie Down Association, Inc.
www.wstda.com

TDWT-1 2010

Types of damage you should look for in tie downs:

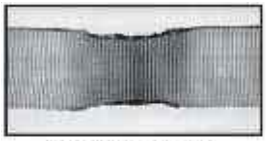
Acid/alkali burns

Cuts or tears

Snags

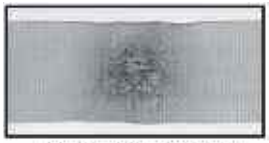
Melting or charring

Excessive abrasive wear

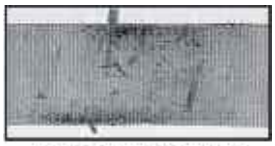
Embedded materials

Knots

Broken/worn stitches

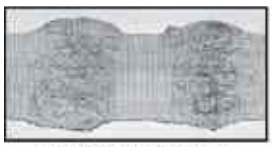
Crushed webbing

UV degradation

© by WSTDA 2010. Used with permission.
'WSTDA' is the registered trade or service mark of Web Sling and Tie Down Association.

Where to Find Additional Information

This bulletin does not provide you with all the information you need to know in order to be considered trained and knowledgeable about securing cargo and using tie downs, but it does provide important information about the use of tie downs. If you need more information about tie downs or your responsibilities according to regulations and standards, talk to your employer. You and your employer can consult a number of sources of information to help ensure that you are properly knowledgeable and trained when using tie downs, including (but not limited to):

- WSTDA-T-1—Recommended Standard Specification for Synthetic Web Tie Downs.
- WSTDA-T-2—Recommended Operating and Inspection Manual for Synthetic Web Tie Downs.
- Protection against shifting and falling cargo. 49 CFR 393.100-393.136 U.S. Department of Transportation
- Understanding the Federal Motor Carrier Safety Administration's Cargo Securement Rules. U.S. Department of Transportation. Publication No.: MC-P/PSV-04-001. (http://fmcsa.dot.gov/documents/cargo/cs-policy.pdf)
- FMCSA Final Rule on Cargo Securement. U.S. Department of Transportation (http://www.fmcsa.dot.gov/cargosecurement.pdf)
- CCMTA National Safety Code Standard 10 Cargo Securement (http://www.ccmta.ca/english/pdf/Standard%2010.pdf)
- Interpretation guide for CCMTA NSC 10 (http://www.ccmta.ca/english/committees/cra/cargo/pdf/interpretationguide.pdf)
- Manufacturer's catalog, manual, website, bulletins, etc.
- Formal training provided by manufacturers or other outside entities.

RECOMMENDED OPERATING, AND INSPECTION GUIDELINES FOR SYNTHETIC WEB SLINGS

⚠ WARNING

Read and follow all use and safety information provided with this sling. Failure to do so may result in severe **INJURY** or **DEATH** due to sling failure and/or loss of load.

The following six points briefly summarize some important safety issues:

1 **All users must be trained** in sling selection, use and inspection, cautions to personnel, environmental effects and rigging practices.

2 **Inspect sling for damage regularly.** A sling shall be removed from service if you see any of the conditions listed on the back of this label. If you have ANY doubts about the condition of a sling, do not use or repair it.

3 **Protect sling from damage.** ALWAYS protect slings in contact with edges, corners, protrusions or abrasive surfaces with materials of sufficient strength, thickness and construction to prevent damage.

4 **Do not exceed a sling's rated capacity.** Always consider the effect of sling angle and tension on the sling's rated capacity.

5 **Do not stand on, under or near a load** with the sling under tension. All personnel should be alert to dangers of falling or uncontrolled loads, sling tension and the potential for snagging.

6 **Maintain and store slings properly.** Slings should be protected from mechanical, chemical and environmental damage.

1. SLING USERS MUST BE TRAINED

This warning label **DOES NOT** contain all the information you need about sling safety. All sling users must be:

- Trained in sling selection and inspection, hazards to personnel, environmental effects and rigging practices.
- Knowledgeable about the safe and proper use and application of slings.
- Thoroughly familiar with the manufacturer's recommendations and safety materials provided with each product.
- Aware of their responsibilities as outlined in all applicable standards and regulations.

2. INSPECT SLING FOR DAMAGE

The entire web sling must be **inspected before each shift or day in Normal service and before each use in Severe service applications.** It shall be **removed from service** if ANY of the following are detected:

- If sling identification tag is missing or not readable.
- Holes, tears, cuts, snags or embedded materials.
- Broken or worn stitches in the load bearing splices.
- Knots in any part of the sling webbing.
- Acid or alkali burns.
- Melting, charring or weld spatters on any part of the web sling.
- Excessive abrasive wear or crushed webbing.
- Signs of ultraviolet (UV) light degradation.
- Distortion, excessive pitting, corrosion or other damage to fitting(s).
- If provided, exposed red core yarn. However if damage is present and red yarns are not exposed DO NOT USE the sling.
- Any conditions which cause doubt as to the strength of the web sling.

To detect possible damage, perform a visual inspection and also feel along the entire length of the sling. Even damage that looks or feels "minor" can significantly degrade sling performance. If you have ANY doubts about the condition of a sling, **DO NOT USE IT.** Never attempt to repair a damaged sling (e.g., tie knots in the webbing, etc.).

3. PREVENT SLING DAMAGE

Synthetic slings can fail if damaged, abused, misused, overused or improperly maintained. Avoid any action that could cause the types of damage listed in the previous section and take steps to prevent sling damage, including:

- **Web slings must ALWAYS be protected from being cut or damaged by corners, edges, protrusions or abrasive surfaces with protection sufficient for the intended purpose.**
- Do not drop or drag slings on the ground, floor or over abrasive surfaces.
- Do not pull slings from under loads when the load is resting on the sling—place blocks under load if feasible.
- Web slings shall not be twisted, shortened, lengthened, tied into knots or joined by knotting.
- Avoid twisting or kinking sling legs.
- Avoid exposing slings to damaging acids or alkalis.
- Never use or allow exposure to temperatures above 194°F (90°C) or below -40°F (-40°C).
- Center sling in the base or "bowl" of a hook to prevent "tip loading."
- Avoid using hooks, shackles or other hardware that have edges or surfaces that could damage sling.
- Do not run/drive over slings with vehicles or other equipment.

4. USE SLING SAFELY

A competent and qualified sling user must consider all risk factors prior to lifting a load. User must:

- Determine the weight of the load and its center-of-gravity (CG).
- Select a sling and hardware having suitable characteristics for the type, size and weight of the load, the type of hitch and the environment.
- Consult the manufacturer's rated capacity tag and/or other materials to determine the reduction in capacity due to sling configuration and angle.
- Avoid accelerating or decelerating the load too quickly (i.e., "shock loading").
- Control the lift and load to prevent slipping, sliding and/or loss of the load.

Use this sling for lifting loads only.

- NEVER use a sling for towing purposes.
- NEVER use a sling to pull on stuck objects.

5. BE ALERT WHEN LIFTING LOADS

When using slings, all personnel must be alert to potential risks:

- Always stand clear of a lifted load and never be under, on or near a suspended load.
- No part of the body should be placed between the sling and load or between the sling and lifting hook.
- Personnel must be alert to the potential for the sling to become snagged during lifting—never use a web sling to pull on objects in a snagged or constrained condition.

6. SLING CARE AND STORAGE

When slings are not in use, they should be stored in a cool, dry and dark location. Slings should also be stored in an area free from environmental or mechanical sources of damage, such as: weld spatter, splinters from grinding/machining, heat sources, UV or chemical exposure, etc.

Slings should be kept clean and free of dirt, grime and foreign materials. Mild soap and water can be used to clean slings, but be sure to let the sling dry completely before placing back in storage or use. Do not machine wash slings. Machine washing results in significant loss of sling strength.

If you want more information about Web Sling safety, contact WSTDA to obtain copies of the Synthetic Web Sling Safety Bulletin — a companion document to this labeling. (Roundsling & Tie Down Safety Bulletin are also available)

©Web Sling & Tie Down Association, Inc.
www.wstda.com

WSWT-1 2010

© by WSTDA 2010. Used with permission.
'WSTDA' is the registered trade or service mark of Web Sling and Tie Down Association.

Types of damage you should look and feel for in web slings:

Cuts or tears

Snags

Holes/punctures

Melting or charring

Weld spatter

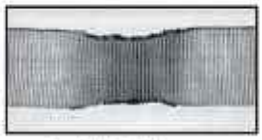
Acid/alkali burns

Broken/worn stitches

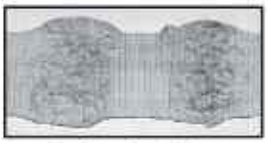
Crushed webbing

Knots

Embedded materials

UV degradation

Exposed red core yarns

Excessive abrasive wear

Where to Find Additional Information

This bulletin does not provide you with all the information you need to know in order to be considered trained and knowledgeable about rigging and lifting loads, but it does provide important information about the use of web slings within a rigging system. If you need more information about web slings and rigging practices or your responsibilities according to regulations and standards, talk to your employer. You and your employer can consult a number of sources of information to help ensure that you are properly trained and knowledgeable when using web slings, including (but not limited to):

- WSTDA-WS-1—Recommended Standard Specification for Synthetic Web Slings.
- ASME B30.9—Synthetic Webbing Slings: Selection, Use and Maintenance.
- OSHA 29 CFR 1910.184—Slings.
- Rigging handbooks.
- OSHA Guidance on Safe Sling Use. (http://www.osha.gov/dsg/guidance/slings/synth-web.html)
- Manufacturer's catalog, manual, website, bulletins, etc.
- Formal training provided by manufacturers or other outside entities.

WSTDA-WSSB-1 2010

RECOMMENDED OPERATING, AND INSPECTION GUIDELINES FOR SYNTHETIC ROUND SLINGS

Types of damage you should look and feel for in round slings:

Holes/tears/cuts in cover; exposed/damaged yarns

Melting or charring

Weld spatter

Knots

Acid/alkali burns

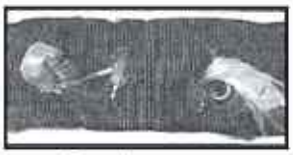
Snags/punctures

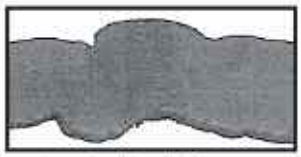
Bunched/wadded yarns

Embedded materials

© by WSTDA 2010. Used with permission.
'WSTDA' is the registered trade or service mark of Web Sling and Tie Down Association.

⚠ WARNING

Read and follow all use and safety information provided with this sling. Failure to do so may result in severe **INJURY** or **DEATH** due to sling failure and/or loss of load.

The following six points briefly summarize some important safety issues:

1 All users must be trained in sling selection, use and inspection, cautions to personnel, environmental effects and rigging practices.

2 Inspect sling for damage regularly. A sling shall be removed from service if you see any of the conditions listed on the back of this label. If you have ANY doubts about the condition of a sling, do not use or repair it.

3 Protect sling from damage. ALWAYS protect slings in contact with edges, corners, protrusions or abrasive surfaces with materials of sufficient strength, thickness and construction to prevent damage.

4 Do not exceed a sling's rated capacity. Always consider the effect of sling angle and tension on the sling's capacity.

5 Do not stand on, under or near a load with the sling under tension. All personnel should be alert to dangers of falling or uncontrolled loads, sling tension and the potential for snagging.

6 Maintain and store slings properly. Slings should be protected from mechanical, chemical and environmental damage.

1. SLING USERS MUST BE TRAINED

This warning label **DOES NOT** contain all the information you need about sling safety. All sling users must be:

- Trained in sling selection and inspection, hazards to personnel, environmental effects and rigging practices.
- Knowledgeable about the safe and proper use and application of slings.
- Thoroughly familiar with the manufacturer's recommendations and safety materials provided with each product.
- Aware of their responsibilities as outlined in all applicable standards and regulations.

2. INSPECT SLING FOR DAMAGE

The entire roundsling must be **inspected before each shift or day in Normal service and before each use in Severe service applications.** It shall be **removed from service** if ANY of the following are detected:

- If roundsling identification tag is missing or not readable.
- Holes, tears, cuts, embedded materials, excessive abrasive wear or snags that expose the core yarn of the roundsling.
- Broken or damaged core yarn.
- If roundsling has been tied into one or more knots.
- Acid or caustic burns of the roundsling.
- Melting, charring or weld spatter of any part of the roundsling.
- Distortion, excessive pitting, corrosion or other damage to fitting(s).
- Broken or worn stitching in the cover which exposes the core yarn.
- Any conditions which cause doubt as to the strength of the roundsling.

To detect possible damage, perform a visual inspection and also feel along the entire length of the sling.

Even damage that looks or feels "minor" can significantly degrade sling performance. If you have ANY doubts about the condition of a sling, **DO NOT USE IT.** Never attempt to repair a damaged sling (e.g., tie knots in the sling, etc.).

3. PREVENT SLING DAMAGE

Synthetic slings can fail if damaged, abused, misused, overused or improperly maintained. Avoid any action that could cause the types of damage listed in the previous section and take steps to prevent sling damage, including:

- **Roundslings must ALWAYS be protected from being cut or damaged by corners, protrusions or from contact with edges that are not smooth or well rounded with materials sufficient for the intended purpose. See Synthetic Roundsling Safety Bulletin (WSTDA-RSSB-1).** Roundslings should be protected from abrasive surfaces.
- Do not drop or drag slings on the ground, floor or over abrasive surfaces.
- Do not pull slings from under loads when the load is resting on the sling – place blocks under load if feasible.
- Roundslings shall not be twisted, shortened, lengthened, tied into knots or joined by knotting.
- Avoid twisting or kinking sling legs.
- Avoid exposing slings to damaging acids or alkalis.
- Never use or allow exposure to temperatures above 194°F (90°C) or below –40°F (-40°C).
- Center sling in the base or "bowl" of a hook to prevent "tip loading."
- Avoid using hooks, shackles or other hardware that have edges or surfaces that could damage sling
- Do not run/drive over slings with vehicles or other equipment.

4. USE SLING SAFELY

A competent and qualified sling user must consider all risk factors prior to lifting a load. Users must:

- Determine the weight of the load and its center-of-gravity (CG).
- Select a sling and hardware having suitable characteristics for the type, size and weight of the load, the type of hitch and the environment.
- Consult the manufacturer's rated capacity tag and/or other materials to determine the reduction in capacity due to sling configuration and angle.
- Avoid accelerating or decelerating the load too quickly (i.e., "shock loading").
- Control the lift and load to prevent slipping, sliding and/or loss of the load.

Use this sling for lifting loads only.

- NEVER use a sling for towing purposes.
- NEVER use a sling to pull on stuck objects.

5. BE ALERT WHEN LIFTING LOADS

When using slings, all personnel must be alert to potential risks:

- Always stand clear of a lifted load and never be under, on or near a suspended load.
- No part of the body should be placed between the sling and load or between the sling and lifting hook.
- Personnel must be alert to the potential for the sling to become snagged during lifting—never use a roundsling to pull on objects in a snagged or constrained condition.

6. SLING CARE AND STORAGE

When slings are not in use, they should be stored in a cool, dry and dark location. Slings should also be stored in an area free from environmental or mechanical sources of damage, such as: weld spatter, splinters from grinding/machining, heat sources, UV or chemical exposure, etc.

Slings should be kept clean and free of dirt, grime and foreign materials. Mild soap and water can be used to clean slings, but be sure to let the sling dry completely before placing back in storage or use. Do not machine wash slings. Machine washing results in significant loss of sling strength.

If you want more information about Roundsling safety, contact WSTDA to obtain copies of the Synthetic Roundsling Safety Bulletin — a companion document to this handbook. Web Sling & Tie Down Safety Bulletins are also available.

© Web Sling & Tie Down Association, Inc.
www.wstda.com

RSWT-1 2010

Where to Find Additional Information

This bulletin does not provide you with all the information you need to know in order to be considered trained and knowledgeable about rigging and lifting loads, but it does provide important information about the use of roundslings within a rigging system. If you need more information about roundslings and rigging practices or your responsibilities according to regulations and standards, talk to your employer. You and your employer can consult a number of sources of information to help ensure that you are properly trained and knowledgeable when using roundslings, including (but not limited to):

- WSTDA-RS-1—Recommended Standard Specification for Synthetic Polyester Roundslings
- WSTDA-RS-2—Recommended Operating and Inspection Manual for Synthetic Roundslings
- ASME B30.9—Synthetic Roundslings: Selection, Use, and Maintenance
- OSHA Guidance on Safe Sling Use (http://www.osha.gov/dsg/guidance/slings/synth-round.html)
- OSHA 29 CFR 1910.184-Slings
- Rigging handbooks
- Manufacturer's catalog, manual, website, bulletins, etc.
- Formal training provided by manufacturers or other entities

© by WSTDA 2010. Used with permission.
'WSTDA' is the registered trade or service mark of Web Sling and Tie Down Association.

ADDITIONAL RESOURCES

U.S. Department of Transportation
Federal Highway Administration (FHWA)
Federal Motor Carrier Safety Regulations (FMCSR's, Title 49 of the Code of
Federal Regulations (CFR): Sections 392.9, Safe Loading; Part 393, Subpart 1
Protection Against Shifting or Falling Cargo). Copies of 49 CFR Parts 200-399 may be purchased from the U.S. Government Printing Office, (202) 512-1800. For questions concerning specific requirements, you can contact the Federal Highway Administration, Office of Motor Carrier Research and Standards (HCS-10),
400 Seventh Street, SW
Washington, D.C., 20590
Telephone (202) 366-4009
Fax (202) 366-8842.

Commercial Vehicle Safety Alliance
(CVSA) Cargo Securement Tie Down Guidelines.
Commercial Vehicle Safety Alliance,
6303 Ivy Lane, Suite 310
Greenbelt, MD 20770
Phone (202) 775-1623
Fax (202) 775-1624
Website: www.cvsa.org

Specialized Carriers & Rigging Association
Cargo Securement on Motor Vehicles;
Specialized Carriers & Rigging Assoc.,
2750 Prosperity Avenue, Suite 620,
Fairfax, VA 22031-4312.
Phone (703) 698-0291
Fax (703) 698-0297
Website: www.scranet.org

In Canada Contact:
The Ministry of Transportation
in each Province. www.mto.gov.on.ca

In Mexico Contact:
Director General de Transporte
Terreste Sub-Director de
Inspection del Transporte
(Rep. En el C.V.S.A.)
Calzada de las Bombas Number
411-11-Piso
Col. San Bartolo Coapa
Mexico, D.F.C.P. 04500

WEB SLING & TIE DOWN ASSOCIATION, INC.
2105 Laurel Bush Road, Suite 200
Bel Air, Maryland 21015
Phone (443) 640-1070
Fax (443) 640-1031
Email: wstda@stringfellowgroup.net
Website: www.wstda.com

NATIONAL ASSOCIATION OF CHAIN MANUFACTURERS
Post Office Box 89014
Tucson, AZ 85752-9014
Phone (520) 886-0695
E-mail: NACMoffice@nacm.info

Index

A

About Us 2
Anti-Slip Mats 28

B

Boa Winch Tie-Down System 13

C

Cable Assembly 12
Cable Winches 12
Cam Buckle Straps
with Spring End Fittings, Series E 33
Cam Buckles 41
Cargo Bar, Aluminum 31
Cargo Bar Holder 32
Cargo Bar Hoop Set....32
Cargo Bar, Steel,
Galvanized Steel Tubing 31
Chain Anchor 5/16" 43
Chain Anchor, with Delta Ring,
Unplated 43
Chain Attachments 43
Chain Tensioner, G70-G80....20
Clamping Bars 31
Coil Rack 19
Coil Rack Heavy Duty Coil Rack 19
Coil Rack Light Duty, 10 gauge steel 19
Corner Protectors....27
Corner Protectors, Fiber Reinforced
Rubber for web straps 27
Corner Protectors,
Rubber Coated Steel 27
Corner Protectors,
Steel for use with chain and straps 27
Corner Protectors, Tarp Protector 27

D

Do2Step lashing strap with Profile Hook 17
DoKEP Nets 18
DoKEP SITnet 18
DoMess 2 – for all 2 inch ratchets 18
DoMess 3 chromated
mobile pretension force indicator 18
DoMess 3 chromated with case....18
DoMess Tension Force Indicator 18
DoMulti Long lever pull ratchet,
strap with Double J-Hook....17
DoMulti Ratchet with DoMess tension
indicator, with U-Profile Hook 17
DoPremium 16, 25, 40
DoPremium 2" Winch Straps
with Flat Hooks 16
DoPremium 3" Winch Straps
with Chain Anchors 16
DoPremium 3" Winch Straps
with Flat Hooks 16
DoPremium 4" Winch Straps
with Chain Anchors 16
DoPremium 4" Winch Straps
with Delta Ring....16
DoPremium 4" Winch Straps
with Flat Hooks 16
DoPremium 4" Winch Straps
with Half Twisted Loop 16
DoPremium Corner Protectors 28
DoPremium Guard 28
DoPremium Roll-On / Roll-Off Container
Strap with Container Hook 16
DoPremium Roll-On / Roll-Off Container
Strap with Sewn Loop 16
DoPremium Round Slings 38
DoPremium Wire Rope Slings 38
DoPremium, Ratchet Buckle Strap,
2" Ratchet Straps with Chain Anchors ..25
DoPremium, Ratchet Buckle Strap,
2" Ratchet Straps with Flat Hooks 25
DoPremium, Ratchet Buckle Strap,
2" Ratchet Straps with Wire Hooks 25
DoPremium, Ratchet Buckle Strap,
3" Ratchet Straps with Chain Anchors ..25
DoPremium, Ratchet Buckle Strap,
3" Ratchet Straps with Flat Hooks 25
DoPremium, Ratchet Buckle Strap,
4" Ratchet Straps with Chain Anchors ..25
DoPremium, Ratchet Buckle Strap,
4" Ratchet Straps with Flat Hooks 25
DoPremium, Ratchet Buckle Strap,
4" Ratchet Straps with Sewn Loop ....
DoPremium, Ratchet Buckle Strap,
4" Ratchet Straps with Wire Hooks 25
DoRapid, Quick Release 2" Side Loading
Ratchet with Flat Hooks 22
DoRapid, Quick Release 2" Side Loading
Ratchet with Wire Hooks 22

F

Flag, Cotton Flag with Steel Rod 29
Flag, Heavy Duty Mesh Flag
(Fluorescent, with 2 Brass Grommets) ..29
Flag, Heavy Duty Mesh Flag
(Fluorescent) 29
Flag, PVC coated Orange Flag and
Wooden Dowel 29
Flag, PVC coated Orange Flag
with Grommets 29
Flags and Banners 29
Flat Eye to Eye – Polyester Slings 36
Flat Hooks 43
Flatbed Accessories 12
Flatbed Solutions 6-29

G

Grabhook Assembly, Unplated 43
Guidelines, additional Information 46

H

Hardware 41-43
Heavy Duty D-Rings 19
Heavy Duty D-Rings with Bolt-on Clip ..19
Heavy Duty D-Rings with Weld-on Clip..19
Heavy Duty Tarp Ties 26

I

Industry Contact Information 49
Interior Van Solutions 30-33
Interior Van Solutions Accessories 32
Interior Van Solutions Accessories,
Beam Socket Heavy Duty 32
Interior Van Solutions Accessories,
Cargo Bar Holder 32
Interior Van Solutions Accessories,
Cargo Bar Hoop Set 32
Interior Van Solutions Accessories,
Reversible Channel Assembly 32
Interior Van Solutions Accessories,
Series E / A Rope Tie Off 32
Interior Van Solutions Accessories,
Standard Beam Socket 32

J

Jack Bars 32

L

Lashing Winch 11
Lashing winch with double Hex Drive,
3 mounting holes 11
Lever Load Binders 20
Lifting Slings 36
Load Anchor 20
Load Banner 29
Load Binders....20
Logistic Track 30
Logistic Track, Series A,
Grey Powdercoat 30
Logistic Track, Series E, Galvanized 30
Logistic Track, Series E,
Grey Powdercoat 30
Logistic Track, Series F, Galvanized 30

P

Pan Fitting 32
Patented Innovations 17
Polyester Round Slings....37
Product Range 3

Q

Quick Release Side Loading
Ratchet Assembly 22
Quick Release Side Loading Ratchet,
Step by Step Instruction 23

R

Ratchet Buckle Strap Serie E Transit Strap with RTJ Hook 33
Ratchet Buckle Strap, Heavy Duty, with Spring End Fitting 33
Ratchet Buckle Straps with Spring End Fittings, Series E 33
Ratchet Buckle Straps, 3" with Chain Anchors 24
Ratchet Buckle Straps, 3" with Flat Hooks 24
Ratchet Buckle Straps, 3" with Wire Hooks 24
Ratchet Buckle Straps, 4" with Chain Anchors 24
Ratchet Buckle Straps, 4" with Flat Hooks 24
Ratchet Buckle Straps, 4" with Narrow Wire Hooks 24
Ratchet Buckles, 1" 41
Ratchet Buckles, 2" 41
Ratchet Buckles, 3 & 4" 42
Ratchet Load Binders 20
Ratchet Strap Assemblies 21
Ratchet Strap Assemblies for Interior Van 33
Ratchet Strap, 2" Long-Wide Handle with Chain Anchors 21
Ratchet Strap, 2" Long-Wide Handle with Flat Hooks 21
Ratchet Strap, 2" Long-Wide Handle with Wire Hooks 21
Ratchet Strap, 2" Short-Wide Handle with Flat Hooks 21
Ratchet Strap, 2" Standard Handle with Flat Hooks 21
Rave-Hook, Vinyl, 1" , WLL 1.167 lbs 42
Recessed Pan Fitting 32
Recoilless Lever Load Binders 20
Recommended operating and inspection guidlines for synthetic round slings 47
Recommended operating, and inspection guidlines for synthetic web slings 46
Recommended operating and inspection guidlines for synthetic web tie downs ..45
Removable Handle Ratchet 18
Rings 43
Roll-off Container Hook 15, 16
Roll-On / Roll-Off Container Strap with Container Hook 15
Roll-On / Roll-Off Container Strap with Sewn Loop 15
Round Shoring Bar 31
Round Slings 37
Rubber Friction Mat, 30" x 42" 28

S

S-Hook, Plated, 1" , WLL 400 lbs 42
S-Hook, Vinyl, 1" , WLL 400 - 600 lbs 42
Shoring Bars 30
Shoring Beams, Series E and A Decking 31
Slip Hooks G70 with Safety Latch 19
Snap Hooks, WLL 2100 - 3333 lb 43
Special Application Winches 11
Square Shoring Bar 30
Standard 2" Winch Strap with Delta Ring 15
Standard 2" Winch Strap with Flat Hook 15
Standard 2" Winch Strap with Wire Hook 15
Standard 3" Winch Strap with Chain Anchor 15
Standard 3" Winch Strap with Flat Hook.....15
Standard 4" Winch Strap with Chain Anchor 15
Standard 4" Winch Strap with Delta Ring 15
Standard 4" Winch Strap with Flat Hook.....15
Standard 4" Winch Strap with Grab Hook 15
Standard 4" Winch Strap with Twisted Loop 15
Standard ratchet with removable handle, 2 inch 18

T

Tiedowns, 4-pack, Strap Assembly, Ratchet Buckle 35
Tiedowns, Cam Buckle Tiedowns 34
Tiedowns, Mini Ratchet Strap with D-Rings and Wire Hooks 34
Tiedowns, Ratched Strap with S Hooks 35
Tiedowns, Ratched Strap with S Hooks, Bulk 35
Tiedowns, Ratchet Strap with Wire Hooks 35
Tiedowns, Ratcheting Tiedowns 34
Tiedowns, Retractable Ratcheting and Cam Tiedowns 34
Track Fitting, Series E 43
Track Fitting, Series E with D Ring 43
Track Fitting, Series E with Ring 43
Transport Chains 19
Transport Chain, Bulk 19
Transport Chain with Clevis Hooks 19
Transport Chains in drums 19
Twisted Eye to Eye Slings, Double-Ply 9,800 lbs 36
Twisted Eye to Eye Slings, Single-Ply 9,800 lbs 36

U

Utility Tiedowns 34-35

W

Warning 46, 47, 48
Warranty 45
Warranty and Guidelines 45-48
Web slings, types of damage and additional Information 47
Web Winches 6
Web Winches, 3 Bar, Low Profile 10
Web Winches, Bottom Mount, Standard Storage 2" Spool 7
Web Winches, Bottom Mount, Standard Storage 3" Spool 7
Web Winches, Bottom Mount, Standard Storage 4" Spool 7
Web Winches, Double L Track Storage Slider 10
Web Winches, Low Profile Double L Track Slider 9
Web Winches, Low Profile Sliding Track Winch 10
Web Winches, Side Mount Low Profile, Portable with 2 Set Screws 8
Web Winches, Standard C Track Slider 9
Web Winches, Standard Double L Track Slider 9
Web Winches, Standard Portable with 2 Set Screws 7
Web Winches, Standard Sliding Track Winch 10
Web Winches, Standard Weld-On 6
Web Winches, Storable C Track Slider 9
Web Winches, Storable Portable with 2 Set Screws 6
Web Winches, Storable Weld-on 6
Web Winder 24
Webbing, 1"- 4", 4,500 - 20,000 lbs, different colors 44
Wide Load Banner, Oversize Load, Mesh with 4 Ropes 29
Wide Oversized Load Banner with 2 ropes 29
Winch Bars 14
Winch Bars, Combination Box End Chrome 14
Winch Bars, Combination Chrome 14
Winch Bars, Standard Chrome 14
Winch Bars, Standard Painted 14
Winch Bars, Xcel 1, Xcel 2 14
Winch Straps 15
Winch Track 14
Winch Track for standard C track and Double L track slider winches 14
Wire Hooks, Narrow 1" & 2" & 3", WLL 1,000 - 7,333 lbs 42

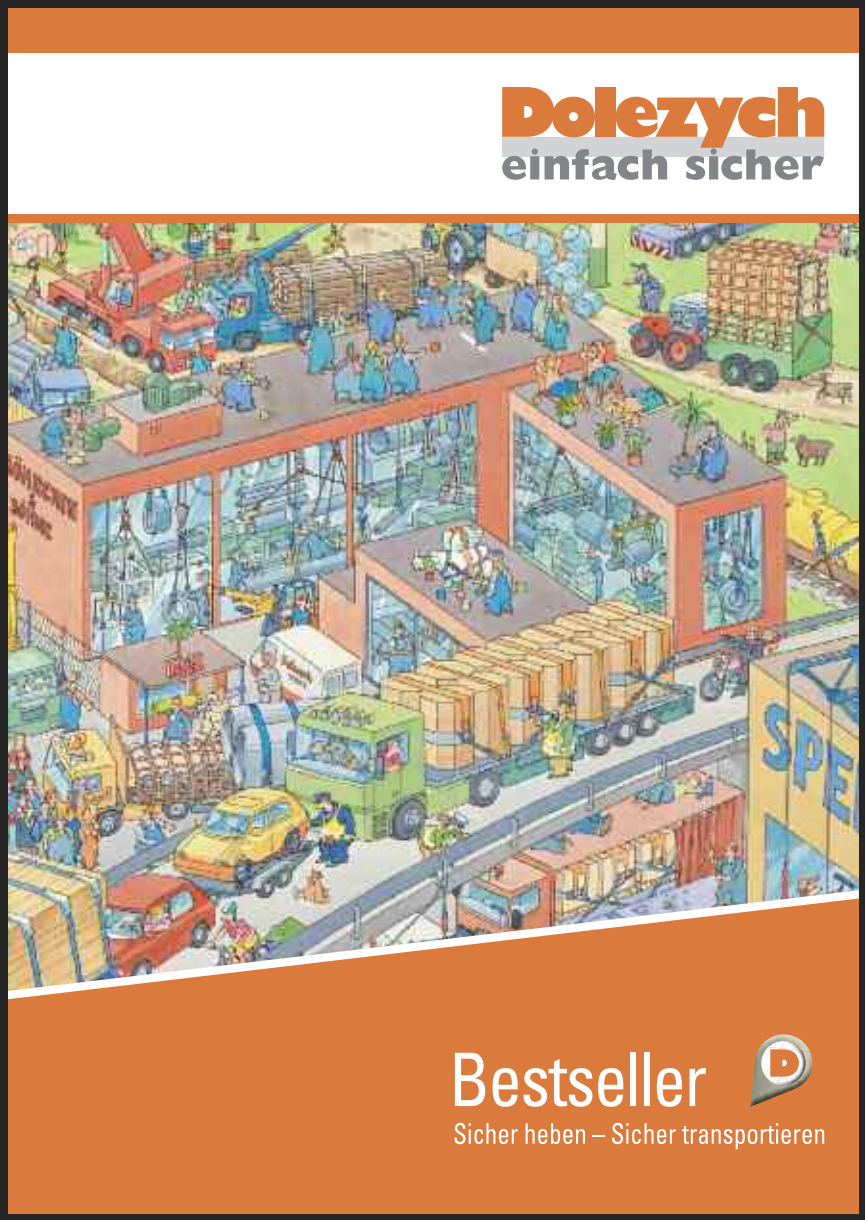

See our full line catalog online at www.doleco-usa.com/literature.

Doleco USA, Inc.

Ralph Abato
President/Managing Director

Office: 860 - 225 - 4521
Cell: 860 - 729 - 5289

Office

400 Oser Ave. Suite 1650,
Hauppauge, NY 11788

Warehouse

290 Pratt St.
Meriden, CT 06450

Phone: 203-440-1940
Fax: 203-440-1950
e-mail: sales@doleco-usa.com

www.doleco-usa.com