SAF-HOLLAND Group

Installation and Operation Manual

CBXA 40 Slider Suspension Systems

- For Disc and Drum Brake Applications

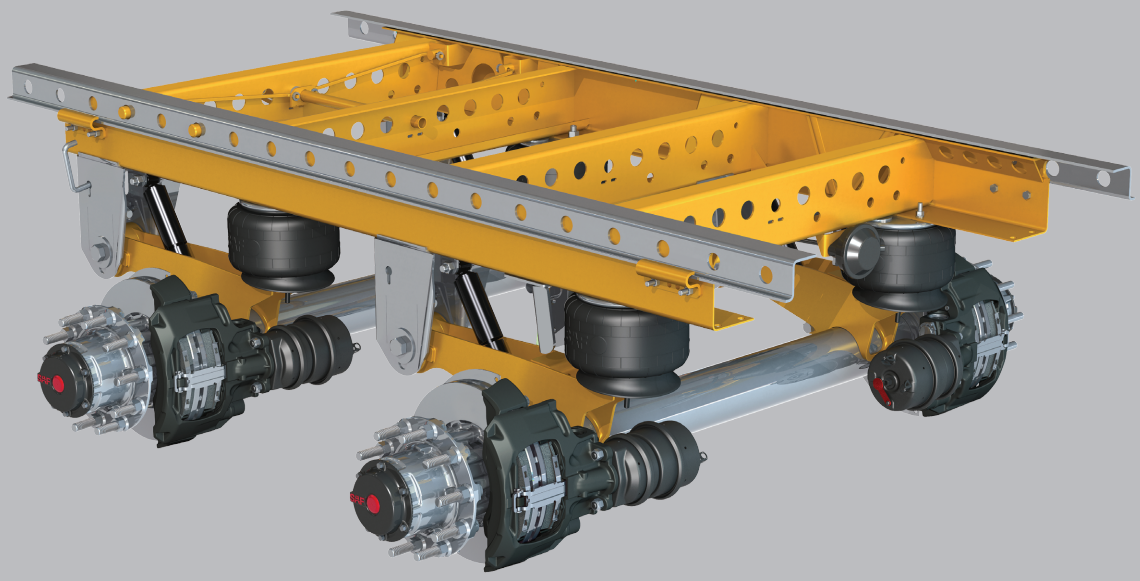

XL-AS20053BM-en-US

Contents Page

Introduction 3
Warranty 3
Notes, Cautions, and Warnings 3
Section 1 – General Safety Instructions 4
Section 2 – Standard Decal Requirements 5
Section 3 – PosiLok™ Decal Requirements 7
Section 4 – CBXA 40 Model Identification 8
Section 5 – CBXA 40 Model Nomenclature 8
Section 6 – Welding Standards 9
Section 7 – Standard Air Control System Installation 10
Optional Air Release System Installation 10
Optional PosiLok™ System Installation 10

Contents Page

Section 8 – Slider Assembly Installation 12
Section 9 – SwingAlign™ Axle Alignment 13
Section 10 – Brake Adjustment Instructions 14
Section 11 – Pre-Operation Information 15
Section 12 – Slider Repositioning Instructions 16
Section 13 – PosiLok™ Anti-Dock Walk 18
Section 14 – Maintenance and Service Schedule 19
Section 15 – Torque Specifications 20

Introduction

This manual provides information necessary for the installation and operation of the SAF-HOLLAND® CBXA 40 trailer air suspension and slider system.

The CBXA 40 suspension includes premium 5.75" diameter axles, For axle end and/or brake servicing information or component replacements, refer to Drum Brake Manual XL-TA10006OM-en-US, Disc Brake Manual XL-SA10059OM-en-US or contact Customer Service at 888-396-6501.

This suspension uses air drawn from the tractor air system to pressurize the air springs. The height control valve (HCV) regulates the air pressure required for varying loads while maintaining the design ride height. This suspension can provide a cushioned ride throughout the load range, from empty to fully loaded.

The suspension also provides excellent side-to-side and axle-to-axle loading which helps equalize and control braking.

Read this manual before using or servicing this product and keep it in a safe location for future reference. Updates to this manual, which are published as necessary, are available on the internet at www.safholland.us.

When replacement parts are required, SAF-HOLLAND® highly recommends the use of only SAF-HOLLAND® Original Parts. A list of technical support locations that supply SAF-HOLLAND® Original Parts and an Aftermarket Parts Catalog are available on the internet at www.safholland.us or contact Customer Service at 888-396-6501.

Warranty

Refer to the complete warranty for the country in which the product will be used. A copy of the written warranty is included with the product or available on the internet at www.safholland.com.

Notes, Cautions, and Warnings

Before starting any work on the unit, read and understand all the safety procedures presented in this manual. This manual contains the terms "NOTE", "IMPORTANT", "CAUTION", and "WARNING" followed by important product information. These terms are defined as follows:

NOTE: Includes additional information to enable accurate and easy performance of procedures.

IMPORTANT: Includes additional information that if not followed could lead to hindered product performance.

CAUTION Used without the safety alert symbol, indicates a potentially hazardous situation which, if not avoided, could result in property damage.

⚠CAUTION Indicates a potentially hazardous situation which, if not avoided, could result in minor or moderate injury.

⚠WARNING Indicates a potentially hazardous situation which, if not avoided, could result in death or serious injury.

1. Safety Instructions

General and Servicing Safety Instructions

- Read and observe all Warning and Caution hazard alert messages. The alerts provide information that can help prevent serious personal injury, damage to components, or both.

WARNING Failure to follow the instructions and safety precautions in this manual could result in improper servicing or operation leading to component failure which, if not avoided, could result in death or serious injury.

- All maintenance should be performed by a properly trained technician using proper/special tools, and safe procedures.

NOTE: In the United States, workshop safety requirements are defined by federal and/or state Occupational Safety and Health Act (OSHA). Equivalent laws could exist in other countries. This manual is written based on the assumption that OSHA or other applicable employee safety regulations are followed by the location where work is performed.

- Properly support and secure the vehicle from unexpected movement when servicing the unit.

WARNING Failure to properly support and secure the vehicle and axles prior to commencing work could create a crush hazard which, if not avoided, could result in death or serious injury.

- If possible, unload the trailer before performing any service procedures.
- After re-positioning the brake chamber, slack adjuster and/or ABS system as instructed in this manual, always consult the manufacturer's manual for proper operation.
- Service both roadside and curbside of an axle. Worn parts should be replaced in sets. Key components on each axle's braking system, such as friction material, rotors and drums will normally wear over time.
- Follow all manufacturer's instructions on spring pressure and/or air pressure controls.

WARNING Failure to follow manufacturer's instructions regarding spring pressure or air pressure control could allow unexpected release of energy which, if not avoided, could result in death or serious injury.

- DO NOT paint the wheel contact surfaces between the wheel and hub.

IMPORTANT: The wheel contact surfaces MUST be clean, smooth and free from grease.

WARNING Failure to keep wheel and hub contact surfaces clean and clear of foreign material could allow wheel/hub separations which, if not avoided, could result in death or serious injury.

- Only the wheel and tire sizes approved by the trailer builder can be used.

Operational and Road Safety Instructions

- Before operating vehicle, ensure that the maximum permissible axle load is NOT exceeded and that the load is distributed equally and uniformly.
- Make sure that the brakes are NOT overheated from continuous operation.

WARNING Failure to minimize the use of brakes during overheating conditions could result in deterioration of brake efficiency which, if not avoided, could result in death or serious injury.

- The parking brake MUST NOT be immediately applied when the brakes are overheated.

CAUTION If the parking brake is immediately applied to the brakes when overheated, the brake drums or discs could be damaged by different stress fields during cooling.

- Observe the operating recommendation of the trailer manufacturer for off-road operation of the installed axles.

IMPORTANT: The definition of OFF-ROAD means driving on non-asphalt/non-concrete routes, e.g. gravel roads, agricultural and forestry tracks, on construction sites and in gravel pits.

IMPORTANT: Off-road operation of axles beyond the approved application design could result in damage and impair suspension system performance.

- Follow the recommended routine maintenance and inspections described in this manual. These procedures are designed so that optimum performance and operational safety are achieved.
- In the event of suspension air pressure loss, quickly reduce speed as safely as possible and remove the vehicle from traffic. If unable to remove vehicle from traffic, follow DOT safety requirements regarding emergency situations.
- Contact a qualified towing and/or service company to assist in repairing the vehicle or to move it to a qualified repair facility. DO NOT operate the vehicle in the absence of suspension air pressure; however in the event of an air system failure while in service, an internal rubber bumper built into the air spring will make it possible to temporarily operate the vehicle at reduced speed determined by road conditions.

WARNING Operating the vehicle without proper air pressure can cause tire failure, fire, or loss of vehicle control which, if not avoided, could result in death or serious injury.

XL-AS20053BM-en-US · 2016-09-27 · Amendments and Errors Reserved · © SAF-HOLLAND, Inc., SAF-HOLLAND, HOLLAND, SAF, and logos are trademarks of SAF-HOLLAND S.A., SAF-HOLLAND GmbH, and SAF-HOLLAND, Inc.

2. Standard Decal Requirements

The following five (5) decals MUST be properly installed on the trailer prior to putting it in service:

- Tire Clearance Warning Decal: XL-AR356-01 ***(Figure 1)***.
- Air Release Warning Decal: XL-AR429 ***(Figure 2)***.
- Manual QWIK RELEASE® Warning Decal: XL-MS184 ***(Figure 3)***.

It is the responsibility of the end user to periodically inspect all decals and ensure that they are clean and completely legible. If any decals are missing, loose, damaged or difficult to read, contact SAF-HOLLAND® Customer Service at 888-396-6501 to order replacements immediately.

Figure 1

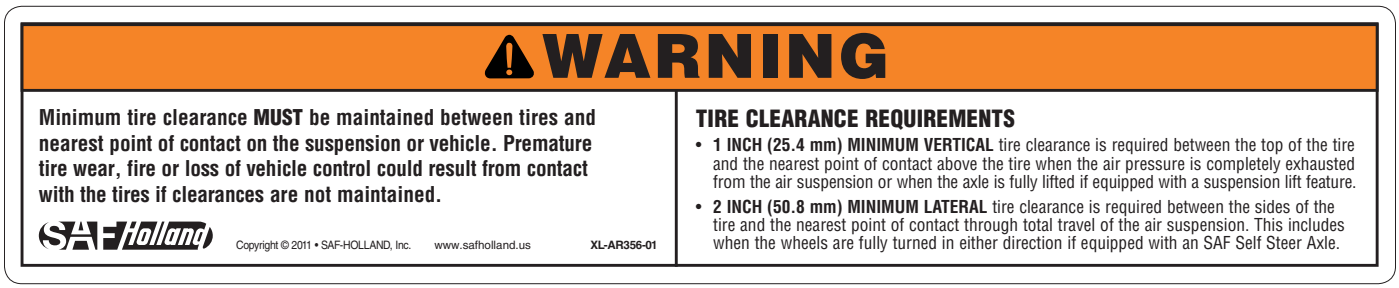

Figure 2

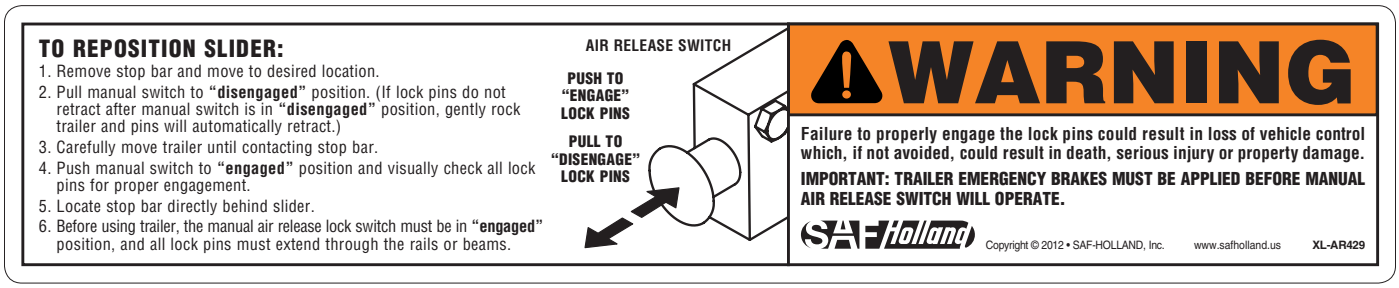

Figure 3

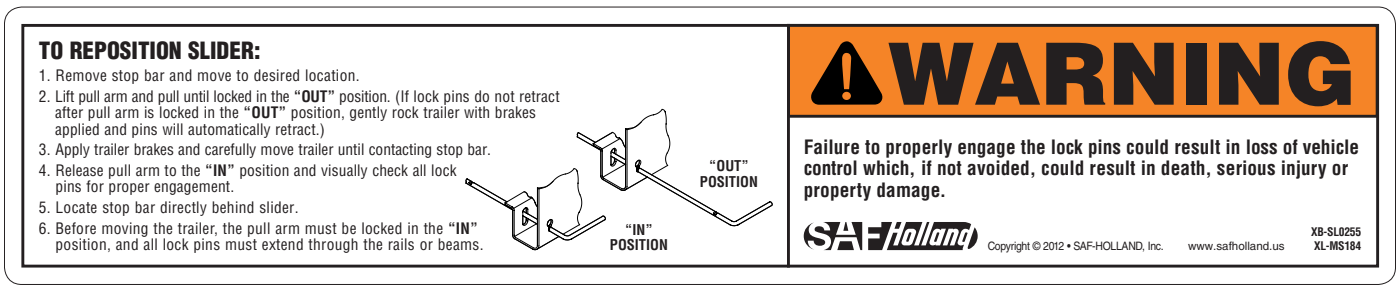

- SwingAlign™ Axle Alignment Decal: XL-AR372-01 ***(Figure 4)***.
- Torque Decal: XL-AR418-01 ***(Figure 5)***.

It is the responsibility of the end user to periodically inspect all decals and ensure that they are clean and completely legible. If any decals are missing, loose, damaged or difficult to read, contact SAF-HOLLAND® Customer Service at 888-396-6501 to order replacements immediately.

Figure 4

SWINGALIGN™ NON-WELDED AXLE ALIGNMENT PROCEDURES

ALIGNMENT BOLT IS ON THE FRONT OF THE ROADSIDE FRAME BRACKET:

STEP 1. Before aligning axle, pull trailer forward in a straight line for a sufficient distance to insure there are no binds in the suspension and then lock the brakes so the slider lock pins rest against the rear of the body rail holes.

STEP 2. Check to verify trailer is empty and emergency brakes are **NOT** engaged.

STEP 3. Rotate bolt **CLOCKWISE** to move axle forward (A arrows); **COUNTERCLOCKWISE** to move axle rearward (B arrows).

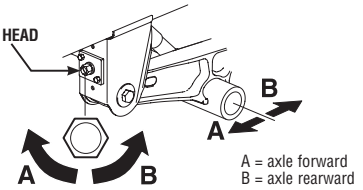

NOTE: 1/2 turn of free play in either direction (A or B) is acceptable.

A = axle forward
B = axle rearward

Copyright © 2011 • SAF-HOLLAND, Inc. www.safholland.us XL-AR372-01

Figure 5

SLIDER AIR SUSPENSION TORQUE SPECIFICATIONS

Torques are with clean, lubricated threads.
Always apply torque to nut, if possible.

REQUIRED RE-TORQUING SCHEDULE:

- All fasteners after first three (3) months or 5,000 miles.
- At every routine preventative maintenance.
- At every brake relining.

	Pivot Connection	Shock	Air Spring		SwingAlign
Fastener Size	1-1/8"	3/4"	1/2"	3/4"	1/2"
Torque ft.-lbs. (N•m)	550-600 (746-813)	140-175 (190-237)	30-40 (41-54)	40-45 (54-61)	50-60 (68-81)

Copyright © 2016 • SAF-HOLLAND®, Inc. www.safholland.us XL-AR418-01 Rev K

XL-AS20053BM-en-US · 2016-09-27 · Amendments and Errors Reserved · © SAF-HOLLAND, Inc., SAF-HOLLAND, HOLLAND, SAF, and logos are trademarks of SAF-HOLLAND S.A., SAF-HOLLAND GmbH, and SAF-HOLLAND, Inc.

3. PosiLok™ (Optional Equipment) Decal Requirements

The following decals MUST be installed on the trailer and MUST be in plain sight of the operator:

- PosiLok™ Misuse Caution Decal: XL-AR437 ***(Figure 6)***.
- Air Up Caution Decal: XL-AR439 ***(Figure 7)***.

It is the responsibility of the end user to periodically inspect all decals and ensure that they are clean and completely legible. If any labels are missing, loose, damaged or difficult to read, contact SAF-HOLLAND® Customer Service at 888-396-6501 to order replacements immediately.

Figure 6

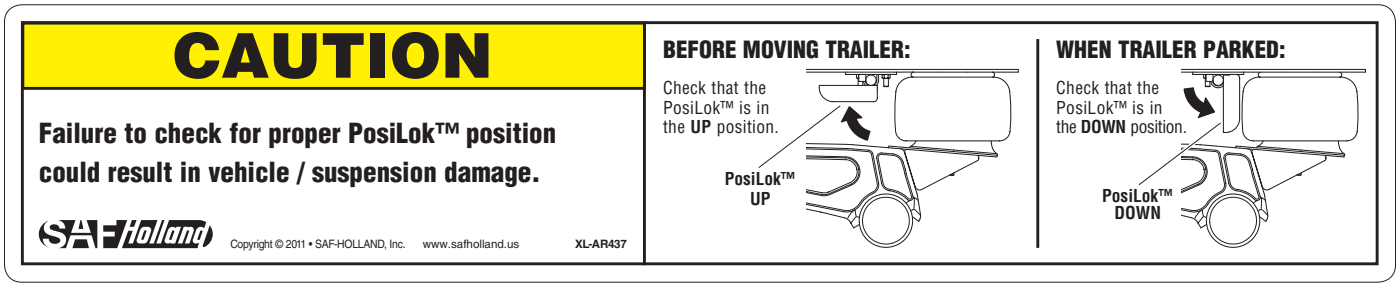

Figure 7

4. CBXA 40 Model Identification

The CBXA 40 suspension serial tag is located on the rear crossmember ***(Figure 8)***.

NOTE: Refer to the serial number tag attached to the slider rear crossmember for information ***(Figure 8)***.

NOTE: If the suspension serial tag is not legible or is not available, you can identify your suspension model by the appearance of the equalizing beam. The CBXA 40 model will have an H-shaped cast beam, 5.75" axle, and a lower air spring mounting plate welded to the beam ***(Figure 8)***.

NOTE: This manual applies to the suspension models listed on the front cover. However, we urge you to determine your specific model number, write that information below and refer to it when obtaining information or replacement parts ***(Figure 9)***.

5. CBXA 40 Model Nomenclature

The sample tag illustrated will help you interpret the information on the SAF-HOLLAND®, Inc. serial number tag. The model number is on the first line along with the suspension capacity. The second line contains the part number and the serial number ***(Figure 9)***.

CB X A 40 - 48 16

- 16 — Ride Height
  16" (406 mm)
  16.5" (419 mm)
  17" (432 mm)
  18" (445 mm)
- 48 — Slider Box Width
  42" (1067 mm) Wide
  48" (1219 mm) Wide
  54" (1372 mm) Wide
- 40 — Axle Capacity
  Suspension Series
  40,000 Tandem
- A — Aero Beam
- X — 5.75" Diameter Premium Axle
- CB — Cast Beam

Figure 8

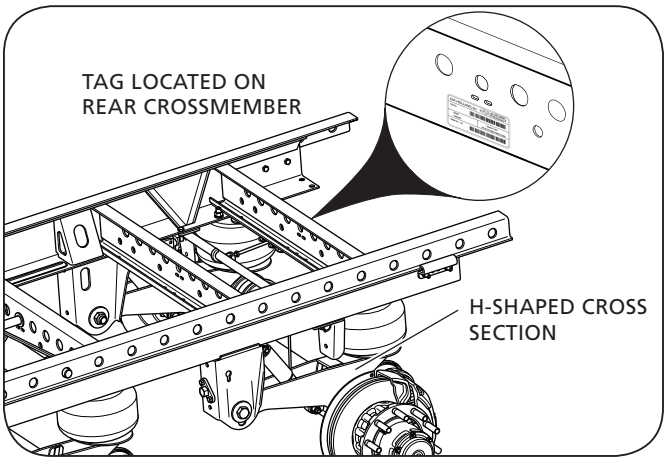

Figure 9

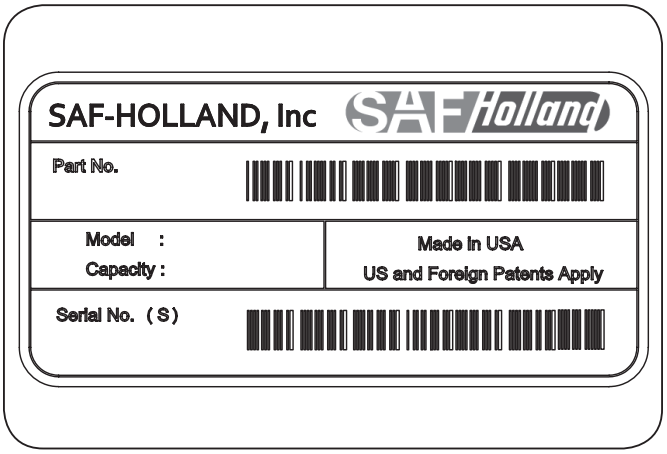

XL-AS20053BM-en-US · 2016-09-27 · Amendments and Errors Reserved · © SAF-HOLLAND, Inc., SAF-HOLLAND, HOLLAND, SAF, and logos are trademarks of SAF-HOLLAND S.A., SAF-HOLLAND GmbH, and SAF-HOLLAND, Inc.

6. Welding Standards

6.1 Scope

The SAF® suspension has been designed to be installed on a trailer with no welding required. When welding is required for suspension repairs, observe the requirements below. Customers may not weld on an SAF® suspension without our prior approval, including the application of the American Welding Society standards by SAF-HOLLAND® engineering. This specification applies to all components supplied by SAF-HOLLAND®, and its products. The customer assumes all responsibility for weld integrity if weld material and procedure differ from those listed below.

6.2 Workmanship

All welding on SAF-HOLLAND® products MUST be performed by a welder qualified according to the appropriate AWS standard for the weld being made or an equivalent standard. It is the responsibility of the customer to provide good workmanship when welding on SAF-HOLLAND® products.

6.3 Material

Items to be welded that are made from low carbon or high-strength alloy steel are to be welded with AWS filler metal specification AWS A5.18, filler metal classification ER-70S-3, ER-70S-6 or equivalent unless specified on the installation drawing.

NOTE: Any substitution for filler material from the above standard must comply, as a minimum, with the following mechanical properties:

Tensile Strength - 72k psi (496 MPa)
Yield Strength - 60k psi (414 MPa)
Charpy V Notch - 20 ft.-lbs. (27 N•m) at 0° F (-17.7° C)
% Elongation - 22%

The recommended welding gas for gas metal arc welding (GMAW) is 90% Argon / 10% CO2. If a different gas is used, welds must comply with penetration requirements illustrated ***(Figure 10)***. Where the installation drawing specifies different than above, the drawing shall prevail.

6.4 Procedures

Tack welds used for positioning components are to be located in the center of the final weld, where practical. Tack weld should be completely fused to the finish weld. DO NOT break arc at the end of the weld. Back up all finish welds at least 1/2" (12.7 mm) or a sufficient amount to prevent craters at the end of the weld. Where weld is illustrated to go around corners, it is assumed the corner represents a stress concentration area. DO NOT start or stop weld within 1" (25.4 mm) of the corner. Particular care should be taken to prevent undercutting in this area.

6.5 Weld Size

If weld size is NOT specified, the effective throat of the weld MUST be no smaller than the thinnest material being welded ***(Figure 10)***.

Figure 10

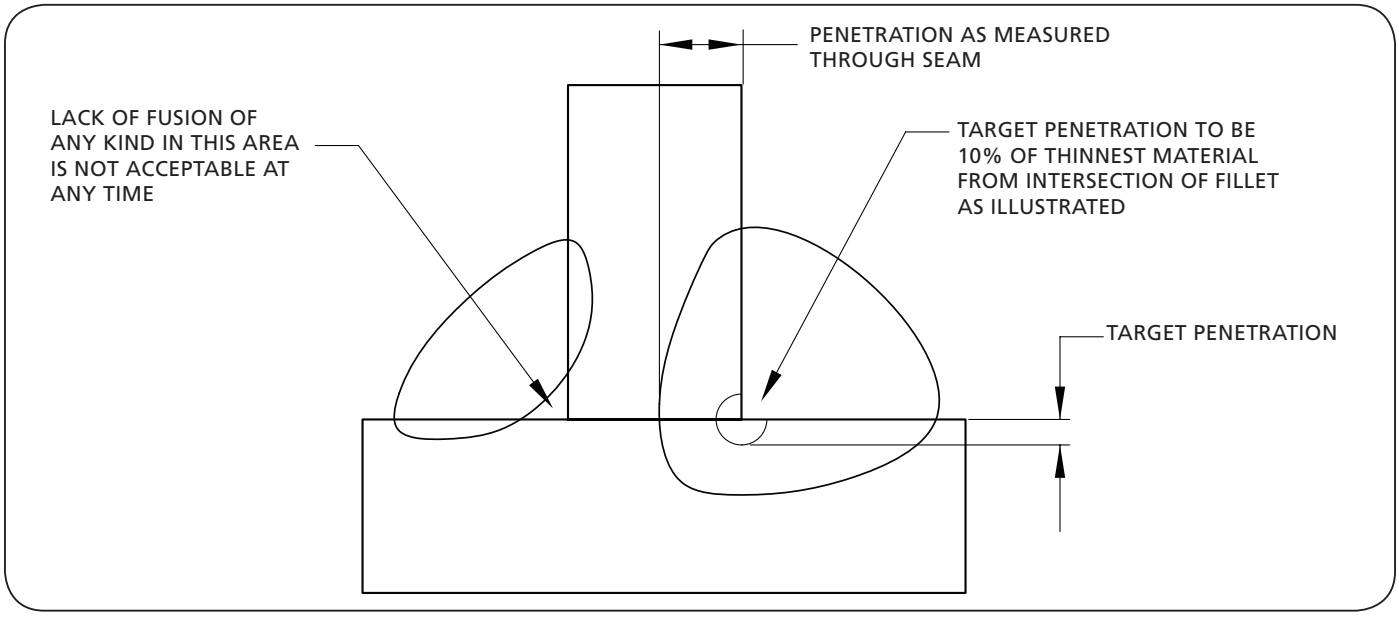

7. Standard Air Control System Installation

1. Install air reservoir, mud flap and stinger brackets. Grind off paint and prepare all surfaces for welding. Refer to welding standards detailed in Section 6 of this manual.
2. Install the air reservoir to the air reservoir brackets.
3. Plumb the air control system as illustrated ***(Figure 11)***.

The air control system of the CBXA 40 suspension uses air drawn from the tractor air system to pressurize the suspension's air springs. The suspension, working with the air control system, provides optimum suspension performance only when all air control system components are installed and operating properly.

IMPORTANT: Make certain that all air lines and valves are free from obstruction through the full operational range of the suspension.

IMPORTANT: A pressure protection valve (PPV) must be attached to the air reservoir in order to maintain proper air pressure in the air reservoir ***(Figure 11)***.

IMPORTANT: The pressure protection valve maintains safe brake pressure. Approximately 85 psig (5.9 bars) opens the valve, and 65 psig (4.5 bars) closes the valve.

NOTE: When installing pressure protection valve, use a drop of oil or loctite to lubricate threaded connections. DO NOT use a pipe compound or teflon tape as they could clog the valve.

A height control valve (HCV) is used to regulate the air spring pressure required for varying load capacities ***(Figure 11)***.

Optional Air Release System

If your CBXA 40 was ordered with a slider pull pin air release system, the air release control valve and the actuator will need to be plumbed ***(Figure 11.A)***.

Optional PosiLok™ System

If your CBXA 40 was ordered with a PosiLok™ anti-dock walk system, the PosiLok™ actuator will need to be plumbed ***(Figure 11.B)***.

XL-AS20053BM-en-US · 2016-09-27 · Amendments and Errors Reserved · © SAF-HOLLAND, Inc., SAF-HOLLAND, HOLLAND, SAF, and logos are trademarks of SAF-HOLLAND S.A., SAF-HOLLAND GmbH, and SAF-HOLLAND, Inc.

Figure 11

STANDARD AIR CONTROL SYSTEM

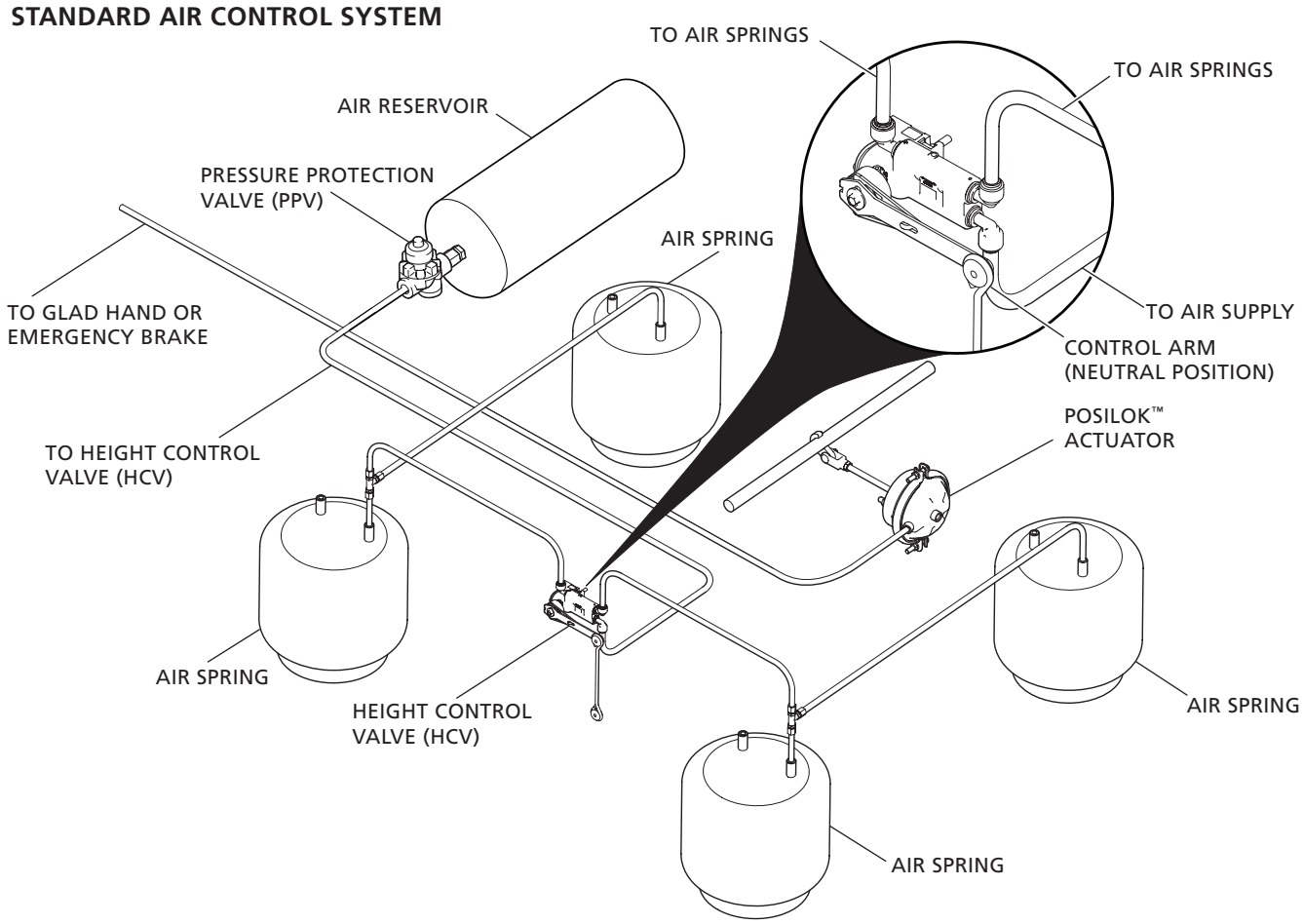

Figure 11.A **OPTIONAL AIR RELEASE SYSTEM**

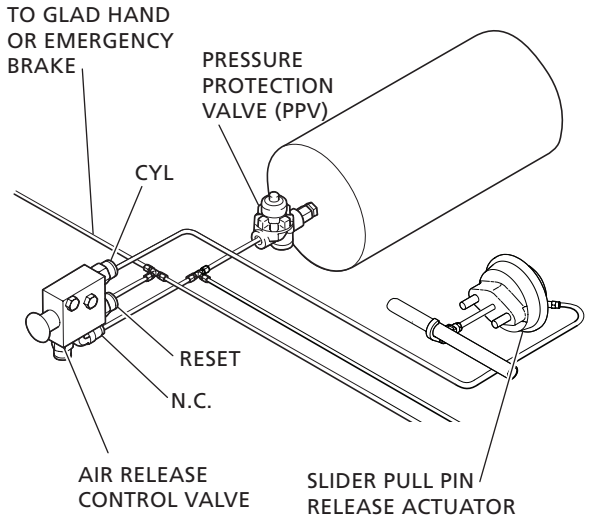

Figure 11.B **OPTIONAL POSILOK™ SYSTEM**

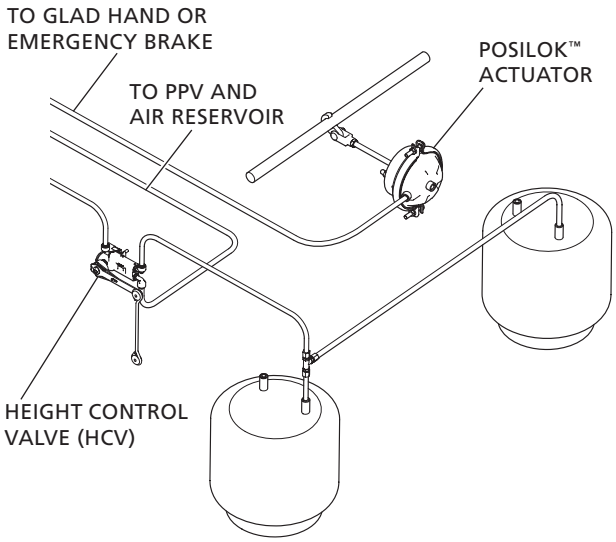

8. Slider Assembly Installation

1. Remove the hold down clips on all four (4) corners of the slider.
2. Locate the slider between the body rails of the trailer and engage the lock pins. Refer to the slider re-positioning operating instructions in Section 12 of this manual.
3. Once the slider is correctly positioned, re-install the hold down clips to the slider and body rails, and torque all 1/2" hold down clip nuts to 75-90 ft.-lbs. (102-122 N•m).
4. Ensure the linkage assembled to the height control valve (HCV) and suspension is of the appropriate height ***(Figure 12)***.

IMPORTANT: A 15" linkage is used for ride heights of 16"-17". A 16" linkage is required for 18" ride heights ***(Figure 12)***.

CAUTION Failure to match the linkage length to the design ride height could result in improper suspension height which, if not avoided, could result in damage to trailer components.

5. Install service and emergency lines to the slider and allow the suspension to air up.
6. Measure the ride height of the suspension ***(Figure 13)*** with a tape measure.
7. Compare the measured suspension ride height value to the appropriate value ***(Table 1)***. Ensure your measured ride height value is within ± 1/4" (6 mm).

Table 1

CBXA 40	"A" RIDE HEIGHT
4216 / 4816 / 5416*	16"
4216.5 / 4816.5 / 5416.5*	16.5"
4217 / 4817 / 5417*	17"
4218 / 4818 / 5418*	18"

*These numbers refer to the last digits of the model number.

IMPORTANT: If your measured ride height value is NOT within ± 1/4"(6 mm); use the table to verify the linkage length ***(Table 2 and Figure 12)***, and the hole location where the top mounting stud of the height control valve (HCV) is bolted to the mounting bracket ***(Figure 14)***.

Table 2

RIDE HEIGHT	HOLE LOCATION	LINKAGE LENGTH
16"	2ND HOLE	15"
16.5"	3RD HOLE	15"
17"	4TH HOLE	15"
18"	4TH HOLE	16"

8. Visually check all air control system fittings for air leaks by applying a soapy water solution and checking for bubbles at all air connections and fittings.

Figure 12

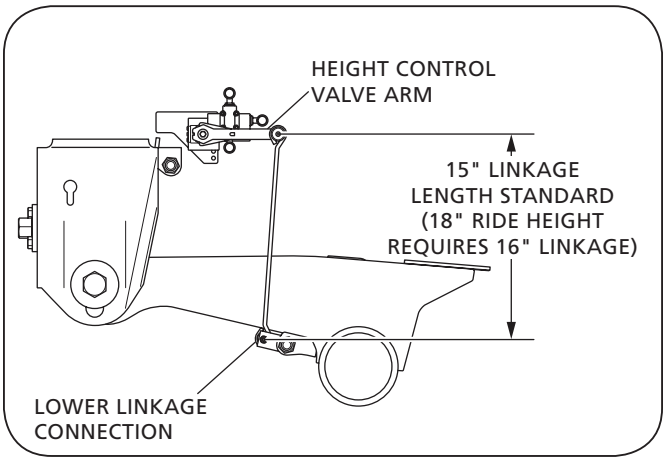

Figure 13

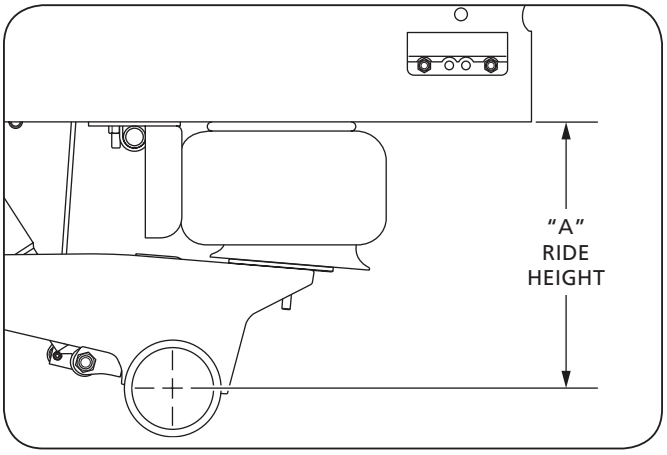

Figure 14

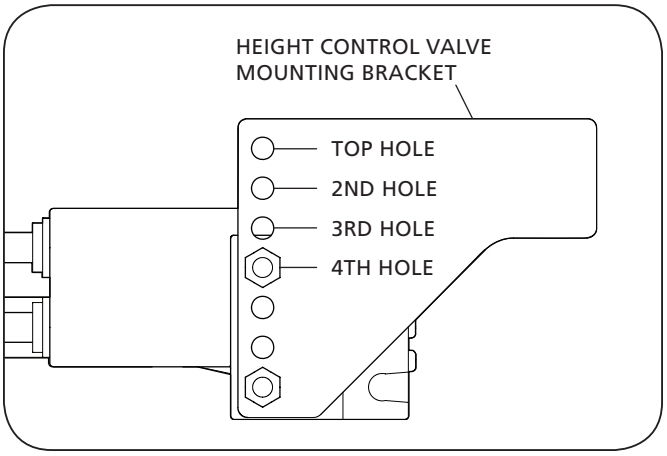

XL-AS20053BM-en-US · 2016-09-27 · Amendments and Errors Reserved · © SAF-HOLLAND, Inc., SAF-HOLLAND, HOLLAND, SAF, and logos are trademarks of SAF-HOLLAND S.A., SAF-HOLLAND GmbH, and SAF-HOLLAND, Inc.

9. SwingAlign™ Axle Alignment

IMPORTANT: Axle alignment can only be achieved if the lockpin holes are the same distance from the kingpin, left and right. Axle alignment should ALWAYS be done while the trailer is empty.

9.1 Alignment Preparation

1. Pull the trailer in a straight line for a sufficient distance to ensure there are no binds in the suspension.
2. Lock the trailer brakes and pull the trailer straight forward so the locking pins rest against the rear of the holes in the body rails.
3. Disengage the trailer parking brakes and ensure the trailer is empty.
4. Manually measure or use an optical device specifically designed for alignment measuring to determine the following:
   a. For proper alignment, measure the distance from the king pin to the centerline of the front axle spindles. It is recommended that spindle extensions be utilized.

      Dimensions A and B ***(Figure 15)*** MUST be equal to within 1/8" (3 mm).

   b. For proper alignment, measure the distance from the centerline of the front axle spindles to the centerline of the rear axle spindles.

      Dimensions C and D ***(Figure 15)*** MUST be equal to within 1/16" (1 mm).

9.2 Alignment Instructions

1. Using the measurements from Step 4, align each axle. Align by rotating the alignment bolt head using a 1-3/8" socket wrench on the front face of the roadside frame bracket. Rotate clockwise to move axle forward ***(A Arrows)***; counterclockwise to move axle rearward ***(B Arrows) (Figure 16)***. Approximately 250 ft.-lbs. (339 N•m) will be required.

IMPORTANT: DO NOT loosen the pivot bolt.

IMPORTANT: Two (2) scribe lines on the side of the frame bracket indicate maximum adjustment for axle alignment. If the edge of the visible washer touches either scribe line the SwingAlign™ axle alignment adjustment is "out of stroke" ***(Figure 17)***. Inspect and repair trailer components as necessary and realign.

IMPORTANT: The SwingAlign™ design maintains proper alignment without welding and without loosening of the pivot connection. DO NOT weld alignment bolt or pivot bolts. ***(Figure 17)***. If connection requires tightening, use a 1-11/16" socket wrench and torque to 550-600 ft.-lbs. (746-813 N•m)

Figure 15

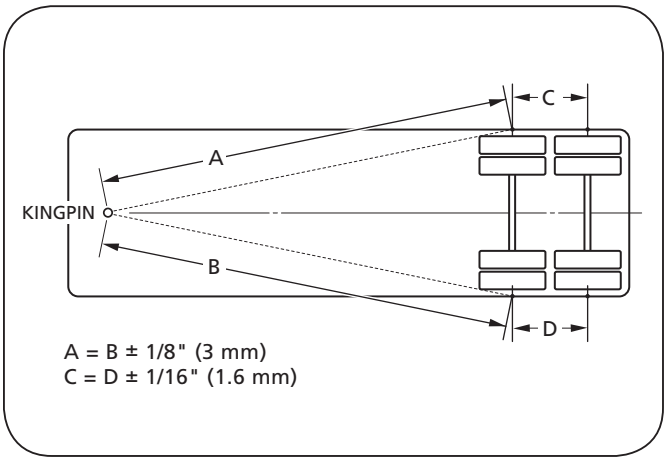

Figure 16

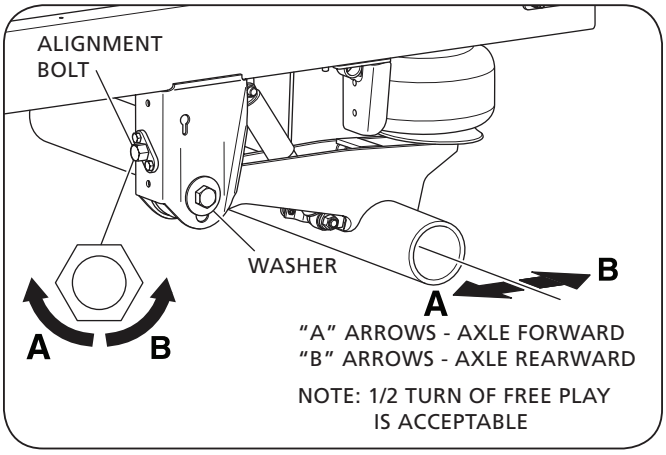

Figure 17

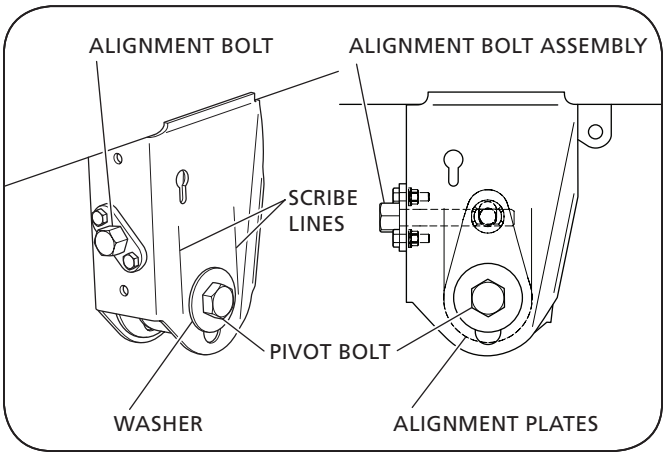

NOTE: Alignment plates are NOT welded to the frame bracket, but are free to rotate.

2. Relocate the slider to the forward position and recheck the king pin alignment. Variance in dimensions "A" and "B" ***(Figure 18)*** indicates there are discrepancies in lock pin hole location.

10. Brake Adjustment Instructions

Brakes should be adjusted per axle and brake manufacturer's specifications.

Figure 18

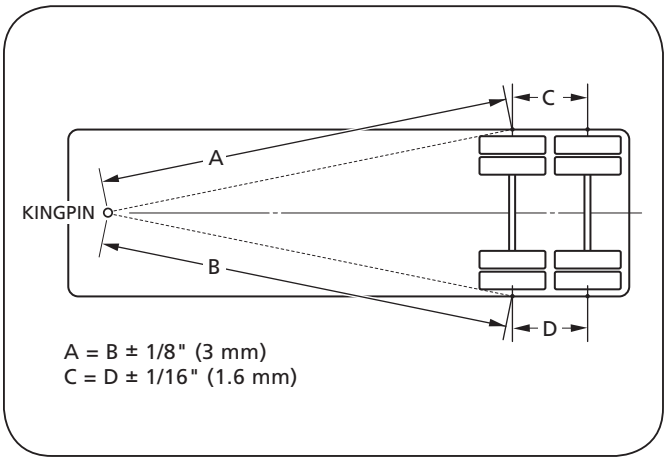

XL-AS20053BM-en-US · 2016-09-27 · Amendments and Errors Reserved · © SAF-HOLLAND, Inc., SAF-HOLLAND, HOLLAND, SAF, and logos are trademarks of SAF-HOLLAND S.A., SAF-HOLLAND GmbH, and SAF-HOLLAND, Inc.

11. Pre-Operation

1. With the vehicle on a level surface, bring air system to operating pressure, above 85 psig/5.9 bars.
2. Shut off the vehicle and inspect all air control system fittings for air leaks by applying a soapy water solution and checking for bubbles at all connections and fittings. Examine the air springs ***(Figure 19)*** for equal firmness.

IMPORTANT: It is the responsibility of the air system installer to secure all air lines and check for any air leaks. If air leaks are detected, repair is required.

CAUTION Failure to eliminate air leaks could compromise suspension's performance which, if not avoided, could result in component or property damage.

3. Check the shock absorbers for proper installation and make sure that the upper and lower 3/4" shock absorber nuts are torqued to 140-175 ft.-lbs. (190-237 N•m) ***(Figure 19)***.
4. Verify that the 1/2" air spring mounting nuts are torqued to 30-40 ft.-lbs. (41-54 N•m), and the 3/4" air spring mounting nuts are torqued to 40-45 ft.-lbs. (54-61 N•m) ***(Figure 19)***.
5. With the suspension at full capacity, check that there is a 1" (25 mm) minimum clearance around the air springs.
6. The suspension's ride height should be within ±1/4" (6 mm) of the recommended design height. For proper height, refer to Ride Height Adjustment Section 7.
7. Verify that the 1-1/8" pivot nut are torqued to 550-600 ft.-lbs. (746-813 N•m) ***(Figure 23)***.

IMPORTANT: The SwingAlign™ design maintains proper alignment under correct torque without welding; DO NOT weld ***(Figure 19)***.

NOTE: SwingAlign™ pivot connections are on roadside and fixed alignment pivot connections are on curbside. For SwingAlign™ Connection Axle Alignment procedure, refer to Section 9.

8. If the vehicle is equipped with a PosiLok™ feature, make sure there is a 1" (25 mm) minimum clearance between the bottom of the flipper plate and the top of the beam pad when at ride height ***(Figure 19)***; Refer to PosiLok™ Installation and Operation Manual XL-AR408 for more information. Available at www.safholland.us or contact SAF-HOLLAND® Customer Service at 888-396-6501.
9. Check that the slider locking pins, slider pull-bar mechanism, and slider wear pads ***(Figure 19)*** are operating properly. For slider repositioning instructions, Refer to procedures described in Section 12 of this manual.
10. Inspect the front and rear hold down clips ***(Figure 19)*** to make sure that they are correctly secured around the slider body rails. Torque all 1/2" hold down clip nuts to 75-90 ft.-lbs. (102-122 N•m).

Figure 19

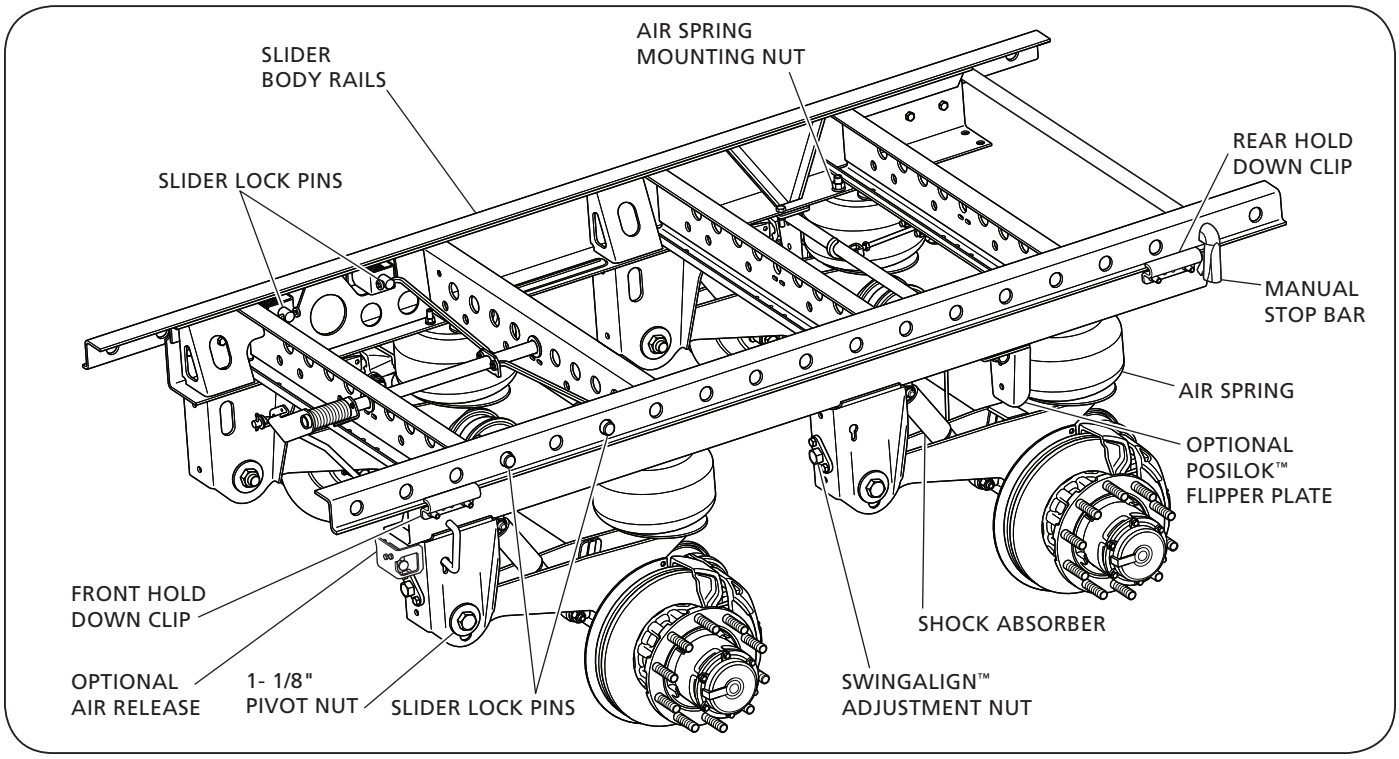

12. Slider Repositioning Instructions

1. With the vehicle on a level surface, set the tractor and trailer brakes and locate the slider QWIK RELEASE® pull arm handle ***(Figure 20)***, or air release control valve.
2. To reposition the slider, remove the manual stop bar and relocate to desired location – rearward of slide box if moving rearward, or forward of slide box if moving forward ***(Figure 20)***.

   If repositioning the slider forward, remove the manual stop bar and relocate directly behind slide box after the slider is moved to final position.
3. Lift and pull the QWIK RELEASE® pull arm handle from the engaged position ***(Notch 1 - Figure 21)*** to the disengaged position ***(Notch 2 - Figure 22)***.

NOTE: If your slider is equipped with an air release pin mechanism, pull the air release control valve knob to disengage the lock pins.

4. Visually check to ensure the lock pins are in the disengaged position, and that the QWIK RELEASE® pull arm handle is locked ***(Notch 2 - Figure 22)***.

   When lock pins have properly disengaged, proceed to Step 6.

   If lock pins fail to disengage, proceed to Step 5.
5. If the QWIK RELEASE® pull handle is in the notch 2 position but the lock pins fail to retract and are still in the engaged position, the QWIK RELEASE® pull arm is in an armed, ready to unlock position.

NOTE: The QWIK RELEASE® torsion spring will automatically retract the lock pins when the pressure on the lock pins is released.

   a. Release the tractor brakes.

⚠WARNING Failure to verify the area is clear of others before moving the vehicle could result in death or serious injury.

   b. Gently rock the tractor and trailer fore and aft while listening for the lock pins to disengage.
   c. After the "metallic clang" of the lock pins disengaging is heard, reset the tractor brakes, and visually verify that the lock pins have been properly disengaged.

If pins DO NOT disengage:

   d. Put air pressure back to the trailer emergency brakes.

Figure 20

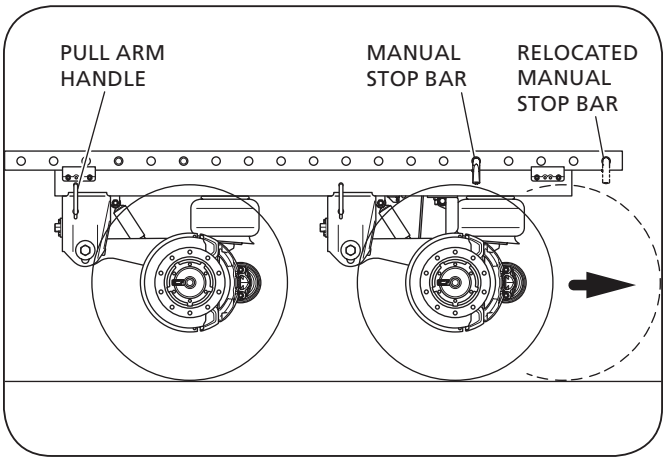

Figure 21

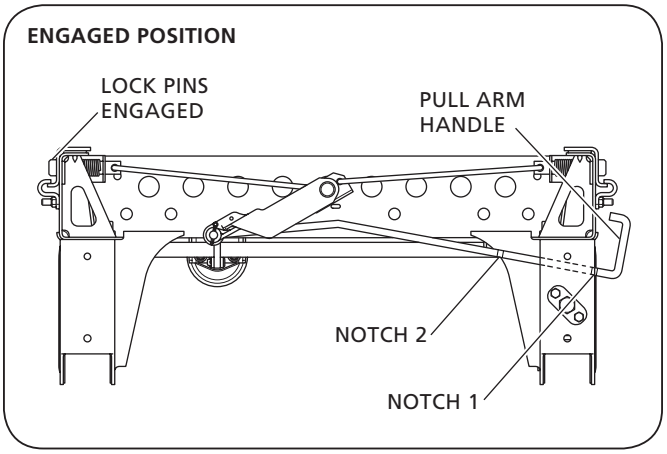

Figure 22

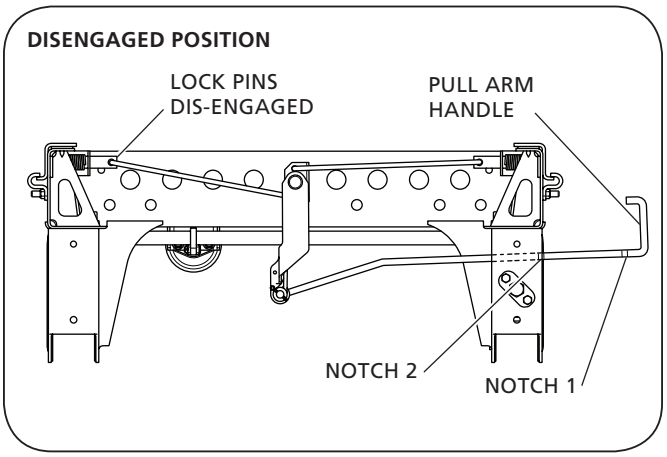

XL-AS20053BM-en-US · 2016-09-27 · Amendments and Errors Reserved · © SAF-HOLLAND, Inc., SAF-HOLLAND, HOLLAND, SAF, and logos are trademarks of SAF-HOLLAND S.A., SAF-HOLLAND GmbH, and SAF-HOLLAND, Inc.

e. Pull the trailer as straight as possible for ten (10) to fifteen (15) feet.

f. Repeat steps 5.a., 5.b. and 5.c. until pins dis engage.

NOTE: If unable to move slider after multiple attempts, a maintenance inspection may be necessary.

WARNING Hazardous conditions may be present if the slider DOES NOT move after multiple attempts. Failure to conduct a maintenance inspection may result in death or serious injury.

6. When the lock pins have disengaged – slowly reposition the tractor until the slide box contacts the manual stop bar ***(Figure 20)***.

7. a. Set the tractor brakes.

NOTE: Trailer parking brakes should still be engaged.

b. Lift and push the pull arm handle from the disengaged position ***(Notch 2 - Figure 23)*** to the engaged position ***(Notch 1 - Figure 24)***.

NOTE: If your slider is equipped with an air release pin mechanism, push the air release control valve knob to engage the lock pins.

8. Visually check that the lock pins are fully engaged and extend through the holes in the upper rail ***(Figure 25)***.

WARNING An unsecured slider box can cause loss of vehicle control which, if not avoided, could result in death, serious injury or property damage.

9. Visually check that the manual stop bar is properly installed directly behind slide box ***(Figure 25)***.

CAUTION Failure to properly install or position the manual stop bar could result in improper trailer load distribution which, if not avoided, could result in damage to the suspension or trailer parts.

Figure 23

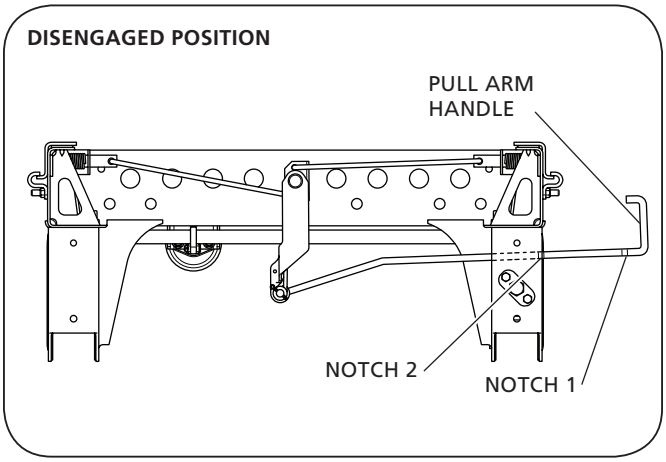

Figure 24

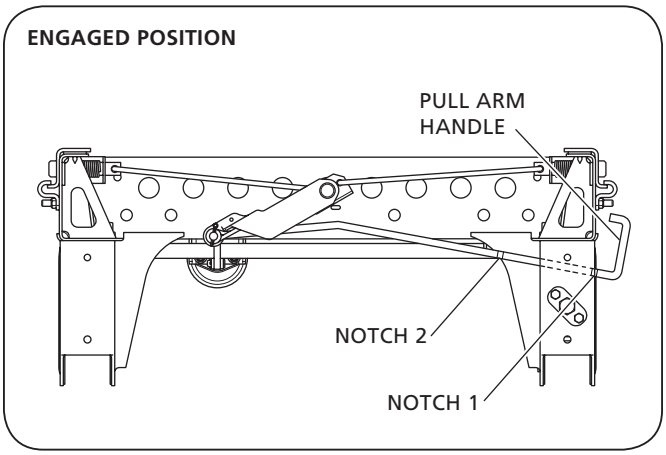

Figure 25

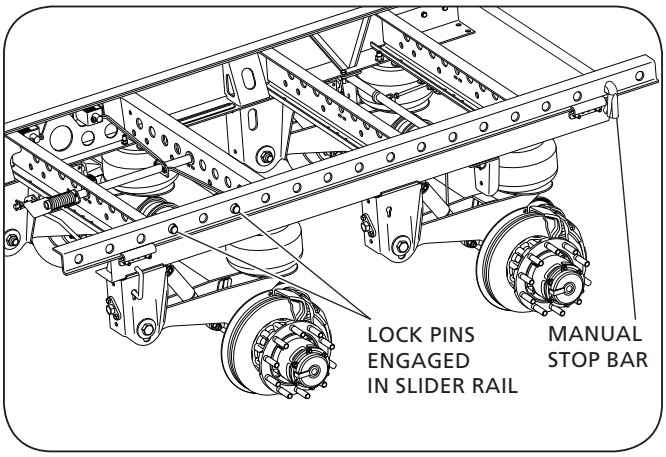

13. PosiLok™ Anti-Dock Walk (Optional Equipment)

The CBXA 40 suspension can be equipped with SAF® PosiLok™ which provides enhanced trailer stability during loading and unloading operations. If the trailer air control system employs a "spring brake priority" type arrangement, potential field service issues could arise due to operational misuse, such as:

- Moving a trailer before the air springs have been properly inflated.
- Use of yard hustler equipment.
- Heavy load operations, such as paperhaul, with the slider in the full forward position.
- Engaging the emergency trailer brakes at a high rate of speed (greater than 5 mph) to move the slider position.
- Use of an auxiliary suspension dump valve with excessive flow.
- Going in and out of ramped docks with slider all the way forward.

SAF® PosiLok™ system will properly support the trailer during normal operations and is designed to bend or buckle when subjected to overloading or other operational issues to protect the trailer sub-frame.

The PosiLok™ is engaged when the flipper plates are in the down position.

1. Release air pressure from the trailer brake system or disconnect the glad hand. This engages the parking brakes and causes the PosiLok™ actuator to engage, which rotates the rod so the flipper plates swing down into an engaged position ***(Figure 26)***.

The PosiLok™ is disengaged when the flipper plates are in the up position.

1. When the parking brakes are disengaged, the primary height control valve (HCV) takes full function. When the system has sufficient air pressure in the suspension air springs, the actuator extends, rotating the rod so the flipper plates swing up away from the load pads into a disengaged position ***(Figure 27)***. The vehicle is now ready for movement.

IMPORTANT: DO NOT operate vehicle (put in motion) if flipper plates are trapped in the down position ***(Figure 28)***. Refer to the troubleshooting section of Installation and Operation Manual XL-AR408. Available at www.safholland.us or contact SAF-HOLLAND® Customer Service at 888-396-6501.

CAUTION Failure to adequately raise flipper plates could result in trailer, suspension component, and cargo damage.

Figure 26

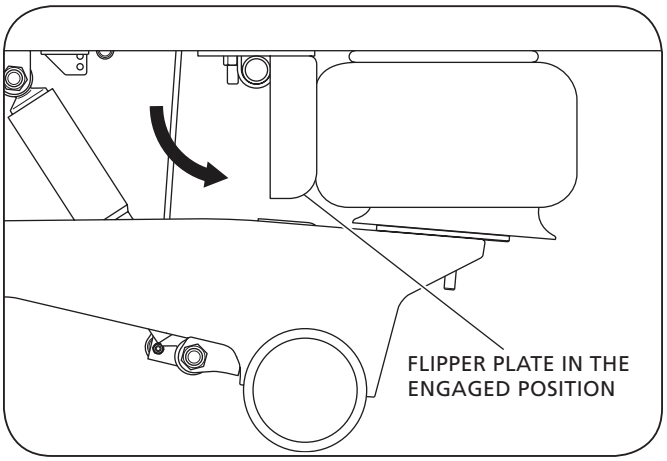

Figure 27

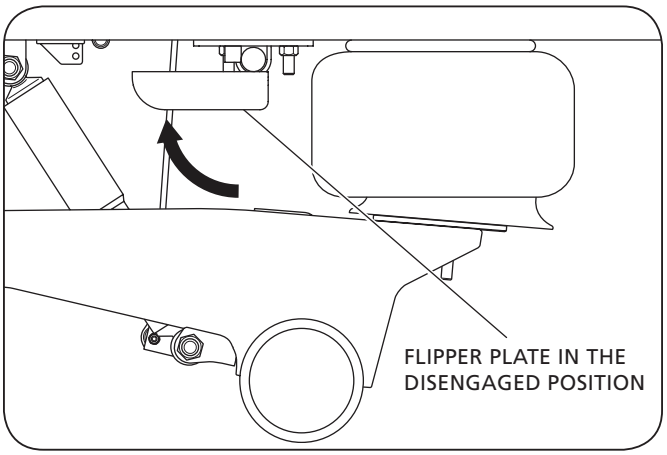

Figure 28

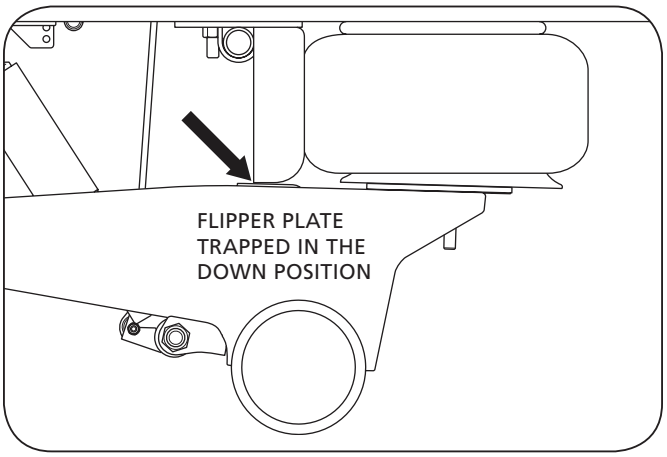

XL-AS20053BM-en-US · 2016-09-27 · Amendments and Errors Reserved · © SAF-HOLLAND, Inc., SAF-HOLLAND, HOLLAND, SAF, and logos are trademarks of SAF-HOLLAND S.A., SAF-HOLLAND GmbH, and SAF-HOLLAND, Inc.

14. Routine Maintenance and Daily Inspection

1. Daily or before each trip, check the suspension to be sure it is fully operational.
2. Inspect all decals to ensure they are clearly legible and intact. Clean with a terry cloth towel, soap and water.
3. Visually inspect air springs for sufficient inflation and that the suspension is at proper ride height. For ride height details and measurements, refer to Section 8 of this manual.
4. Inspect the slider lock pins and slider pull handle for signs of excessive wear, bending or binding.
5. Inspect the front and rear hold down clips to ensure that they are correctly secured around the body rails.

14.1 Initial Three (3) Months or 5,000 Mile (8,000 km) Service Inspection

1. Suspension ride height (underside of frame to centerline of axle) MUST be within ±1/4" (6 mm) of recommended design height. For instructions on measuring ride height, refer to Section 8.

CAUTION An improperly set ride height could result in suspension component damage and/or poor vehicle ride performance.

2. After first three (3) months or 5,000 miles (8,000 km) of service, whichever comes first, inspect bolts and nuts at the pivot connections to ensure they are properly torqued. Check all other nuts and bolts for proper torque, refer to the specifications listed in Section 15. Re-torque as necessary thereafter.
3. With the vehicle on a level surface and air pressure above 85 psig (5.9 bars), verify that all air springs are of sufficient and equal firmness.

NOTE: Check all air control system fittings for air leaks, by applying a soapy water solution and checking for bubbles at all air connections and fittings.

14.2 Routine Physical Inspections

Every 100,000 Miles (160,000 km) or one (1) year, whichever comes first.

Check all other suspension components for any sign of damage, looseness, torque loss, wear or cracks. Repair, tighten or replace damaged part(s) to prevent equipment breakdown.

14.3 Visual Inspection Procedure

IMPORTANT: A schedule for physical and visual inspections should be established by the operator based on severity of operation or damage to the vehicle could occur.

IMPORTANT: During each pretrip and safety inspection of the vehicle, a visual inspection of the suspension should be done or damage to the vehicle could occur.

Visually check for:

- Loose, broken or missing fasteners. Repair or replace as needed.

⚠WARNING Loose, damaged, or missing fasteners can cause loss of vehicle control which, if not avoided, could result in death or serious injury.

- Air springs – clearances, wear damage, and proper inflation.
- Shock absorbers – leaking or damaged.
- Cracked parts or welds.

Also:

- Check the slider locking pins, slider pull-bar mechanism and slider wear pads for signs of excessive wear or binding, refer to Section 11 ***(Figure 19)***. Repair or replace as needed.
- Inspect the structure of the slider box and cross members for damage, refer to Section 11 ***(Figure 19)***. Repair or replace as needed.
- Inspect the front and rear hold down clips to make certain the clips are secured correctly around the body rails, refer to Section 11 ***(Figure 19)***. Torque all 1/2" nuts to 75-90 ft.-lbs. (102-122 N•m).

15. Torque Specifications

Table 3

COMPONENT	TORQUE VALUE	FASTENER SIZE
Shock Absorber	140-175 ft.-lbs. 190-237 N • m	3/4"
Pivot Connection	550-600 ft.-lbs. 746-813 N • m	1-1/8"
Air Spring	30-40 ft.-lbs. 41-54 N • m	1/2"
Air Spring	40-45 ft.-lbs. 54-61 N • m	3/4"
SwingAlign™ Mounting Fasteners Only - NOT Pivot Bolt	50-60 ft.-lbs. 68-81 N • m	1/2"
Height Control Valve Lower Linkage	30-40 in.-lbs. 3.4-4.5 N • m	1/4"
Hold Down Clip Nuts	75-90 ft.-lbs. 8.5-10 N • m	1/4"

Torques specified are for clean, lubricated threads.
Always Apply torque to nut if possible.
Required re-torquing at every brake re-lining.

NOTE: Torque specifications listed above are with clean lubricated/coated threads ***(Table 3)***. All new SAF-HOLLAND® fasteners come precoated from the factory. For bolt and lock nut grade markings, refer to ***Figure 29***.

IMPORTANT: The use of special lubricants with friction modifiers, such as Anti-Seize or Never-Seez®, without written approval from SAF-HOLLAND® Engineering, will void warranty and could lead to over torquing of fasteners or other component issues.

General Information

1. The torque specifications are applied to the nut and NOT the bolt.

⚠WARNING Failure to use the proper fasteners when servicing the suspension could cause component failure which, if not avoided, could result in death or serious injury.

⚠WARNING Failure to properly torque all fasteners could result in component failure which, if not avoided, could result in death or serious injury.

Figure 29

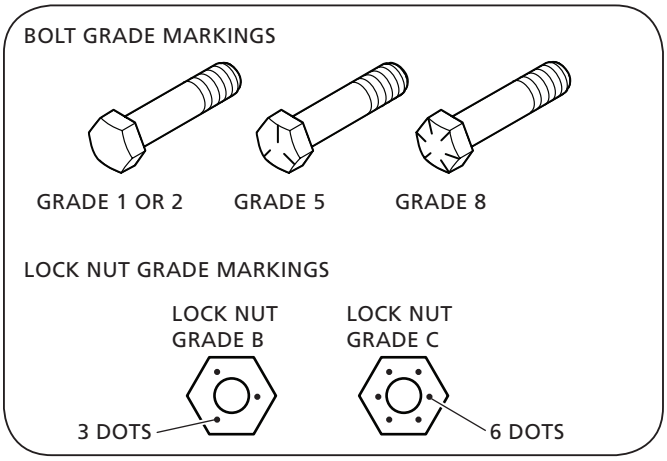

XL-AS20053BM-en-US · 2016-09-27 · Amendments and Errors Reserved · © SAF-HOLLAND, Inc., SAF-HOLLAND, HOLLAND, SAF, and logos are trademarks of SAF-HOLLAND S.A., SAF-HOLLAND GmbH, and SAF-HOLLAND, Inc.

XL-AS20053BM-en-US · 2016-09-27 · Amendments and Errors Reserved · © SAF-HOLLAND, Inc., SAF-HOLLAND, HOLLAND, SAF, and logos are trademarks of SAF-HOLLAND S.A., SAF-HOLLAND GmbH, and SAF-HOLLAND, Inc.

ORIGINAL PARTS™

From fifth wheel rebuild kits to suspension bushing repair kits, SAF-HOLLAND Original Parts are the same quality components used in the original component assembly.

SAF-HOLLAND Original Parts are tested and designed to provide maximum performance and durability. Will-fits, look-alikes or, worse yet, counterfeit parts will only limit the performance potential and could possibly void SAF-HOLLAND's warranty. Always be sure to spec SAF-HOLLAND Original Parts when servicing your SAF-HOLLAND product.

SAF-HOLLAND USA • 888.396.6501 • Fax 800.356.3929
www.safholland.us

SAF-HOLLAND CANADA • 519.537.3494 • Fax 800.565.7753
WESTERN CANADA • 604.574.7491 • Fax 604.574.0244
www.safholland.ca

SAF-HOLLAND MEXICO • 52.55.5362.8743 • Fax 52.55.5362.8743
www.safholland.com.mx

info@safholland.com

XL-AS20053BM-en-US · 2016-09-27 · Amendments and Errors Reserved · © SAF-HOLLAND, Inc., SAF-HOLLAND, HOLLAND, SAF, and logos are trademarks of SAF-HOLLAND S.A., SAF-HOLLAND GmbH, and SAF-HOLLAND, Inc.

SAF-HOLLAND USA, INC.
1950 Industrial Blvd, Muskegon, MI 49442
www.safholland.com

Engineering Your Road to Success