Heil Trailer International, Co.

ISO 9001, ISO 14001, OSHAS 18001 - Certified

Schlumberger 1240 Sand Transport Owner's/Operator's Manual

© 2013 by Heil Trailer International, Co. All Rights Reserved.

⚠ DANGER

This manual is intended to help ensure the safe and efficient operation of your Heil Trailer and products. IF INCORRECTLY USED, OPERATED, MAINTAINED OR REPAIRED, THIS EQUIPMENT CAN CAUSE SEVERE INJURY, DEATH AND PROPERTY DAMAGE. THOSE WHO USE, OPERATE, MAINTAIN AND REPAIR THE EQUIPMENT SHOULD BE TRAINED IN ITS PROPER USE, OPERATION, MAINTENANCE AND REPAIR, WARNED OF ITS DANGERS, AND SHOULD READ THIS ENTIRE MANUAL BEFORE ATTEMPTING TO USE, OPERATE, MAINTAIN, SET UP, ADJUST, SERVICE OR REPAIR THE TRAILER OR PRODUCT. Recommended operating practices furnished in this manual are general practices. HEIL cannot possibly know, evaluate, or advise anyone of all conceivable ways a Heil trailer or product might be used, operated, maintained, set up, adjusted, repaired or of all possible consequences of each way. ALL PERSONS WHO PERFORM ANY OF THESE TASKS MUST FIRST SATISFY THEMSELVES THOROUGHLY THAT NEITHER THEIR SAFETY NOR THE GENERAL PUBLIC WILL BE JEOPARDIZED BY ANY METHOD THEY SELECT. KEEP THIS MANUAL FOR FUTURE REFERENCE.

WARRANTY STATEMENT

Heil Trailer International warrants trailers sold by us to be free from defects in material and workmanship. This coverage is subject to and limited to coverage periods listed in the Heil Trailer International Limited Silver Warranty Sub Part A - Limitations document and as defined in the Heil Trailer International Limited Warranty Sub Part B – Definitions document. Our obligation and liability under this Warranty is expressly limited to repairing or replacing, at our option, within the coverage time limitations listed in the Heil Trailer International Limited Silver Warranty Sub Part A - Limitations document, from the date of shipment any defective product except for maintenance items, tires, and purchased items which are warranted separately by the original manufacturer. A failure that is determined by Heil Trailer International, at our sole discretion, to be caused by wear and tear or misuse as opposed to product defect is not covered at any time in the warranty period.

WE MAKE NO OTHER WARRANTY, EXPRESSED OR IMPLIED, AND MAKE NO WARRANTY OF MERCHANTABILITY OR FITNESS FOR ANY PARTICULAR PURPOSE. Our obligation under this warranty shall not include any transportation charges, or any liability for direct, indirect or consequential damage or delay. Any improper use, operation beyond rated capacity, substitution of parts not approved by us, or any alteration or repair by others in such manner as in our judgment affects the product materially and adversely shall void this warranty. NO EMPLOYEE OR REPRESENTATIVE IS AUTHORIZED TO CHANGE THIS WARRANTY IN ANY WAY OR GRANT ANY OTHER WARRANTY WITHOUT THE WRITTEN AUTHORIZATION OF AN OFFICER OF HEIL TRAILER INTERNATIONAL.

Heil Trailer International warrants that this trailer is manufactured in accordance with the specifications of the order. Heil Trailer International does not warrant this piece of equipment for use in hauling any specific product. Heil Trailer International accepts no responsibility for damage to the equipment, or for cargo losses due to an adverse affect on the equipment, caused by the incompatibility of the product being hauled in the trailer. Where tanks are prepared for lining, all agreements, billing included, that concern the tank barrel lining will be the responsibility of the customer and the lining company. In this connection, Heil Trailer International makes no warranty of products, including lining manufactured and /or installed by others, the same being subject to warranties, if any, of their respective manufacturers or installers. The customer shall bear the risk for damage or loss to the tank or injury to property or persons while the tank is either at or in transit to or from the lining company.

Warranty will be paid only if Heil Trailer International procedures for filing warranty claims are followed. **Pre-approval** prior to any repairs is a mandatory requirement for receiving payment along with strict adherence to all other conditions of the procedures. Warranty repairs will only be permitted at Heil Trailer International approved repair shops.

TABLE OF CONTENTS

GENERAL

Introduction.....5

Warranty Claims and Inquiries.....5

Directional Reference.....5

Important Safety Messages.....6 thru 15

Safety Decals.....16 thru 18

General Tank Nomenclature.....19 thru 20

OPERATING INSTRUCTIONS

Piping System Components.....21 thru 28

Folding Handrail Description and Operation 29

Sliding Ladder Description and Operation.....30

Aeration System-Operational Description.....31

Specific Operating Instruction.....32 thru 36

Operating Tips.....37 thru 39

Blower.....40

PREVENTIVE MAINTENANCE INSTRUCTIONS

Introduction and Delivery Inspection.....41

Maintenance Schedule.....42 thru 43

Lubrication and Service Chart.....44 thru 46

Maintenance Details.....46 thru 60

Torque Charts.....61

REPORTING SAFETY DEFECTS.....Inside Back Cover

Publication Disclaimer

The information and specifications included in this publication were in effect at the time of approval for printing. The Heil Co. d/b/a Heil Trailer International, Athens, TN USA reserves the right, however, to discontinue or change specifications or design at any time without notice and without incurring any obligation whatsoever. Revision 12/2013

INTRODUCTION

This manual is designed to help ensure safe and efficient operation of the HEIL Dry Bulk Materials Transport.

The book is divided into three sections. Part 1 will familiarize you with the unit. Part 2 gives operating procedures and tips. Part 3 covers the maintenance necessary to keep the unit in safe operating condition.

TO THE OWNER

We at the Heil Trailer International take pride in the products we manufacture. We trust you will be well satisfied with your purchase. Properly operated and maintained, the Dry Bulk Materials Transport will provide many years of low-cost, trouble-free service.

WARRANTY CLAIMS & INQUIRIES

The HEIL Standard Warranty is included in this manual. In the unlikely event you need warranty service on your tank equipment purchased from Heil Trailer International or its distributors, contact the distributor or Heil Trailer International (800-400-6913) directly, for service and repair procedures.

For all parts, claims or inquiries refer to the model and serial number of your unit. This information is found on the identification plate (see figure 1).

Figure 1. Example Identification Plate

DIRECTIONAL REFERENCE

For your reference the sides of the tank transport are determined by facing in the direction of forward travel. The right side is the “Curbside”; the left side is the “Roadside”.

IMPORTANT SAFETY MESSAGES

DANGER

WARNING

CAUTION

NOTICE

THESE SAFETY ALERT SYMBOLS INDICATE IMPORTANT SAFETY MESSAGES THROUGHOUT THIS MANUAL.

WHEN YOU SEE THESE SYMBOLS, CAREFULLY READ THE MESSAGES THAT FOLLOW AND BE ALERT TO THE POSSIBILITY OF PERSONAL INJURY OR DEATH TO YOURSELF OR OTHERS.

IMPORTANT SAFETY MESSAGES

CAUTION

Inspection of equipment, safety devices and working areas must be performed before each trip to ensure personal and operational safety, and to correct potential or actual hazards.

DANGER

Do not alter or modify any of the equipment or components provided with this tank trailer. Use of non-HEIL parts or non-OEM component parts may cause serious personal injury, including death.

WARNING

Before moving the tank trailer into a building, the tank must be free of product and checked with an approved gas analyzer to ensure it is free of hazardous and/or flammable vapors.

DANGER

Never climb onto a tank that has not been completely depressurized. Such an unsafe practice could cause severe personal injury, including death.

IMPORTANT SAFETY MESSAGES

DANGER

Do not enter the tank trailer until each of the following conditions has been satisfied:

- **The pressure inside the vessel has been completely relieved**
- **The tank has been thoroughly purged and vented**
- **The tank has been degassed and/or cleaned by an authorized cleaning facility**
- **The MSDS for the last product(s) hauled has been reviewed**
- **The OSHA 1910.146 Confined Entrance Requirements are strictly complied to.**

Failure to follow any one of these instructions may result in serious personal injury, including death.

CAUTION

The relief valve must be operational to maintain system pressure within safe limits.

DANGER

Do not exceed recommended working pressures. If the pressure rises above safe limits, shut down the blower immediately and investigate. Abnormal pressures can cause severe damage to the tank, and cause serious personal injury, including death.

IMPORTANT SAFETY MESSAGES

⚠ CAUTION

The blowdown valve should be OPEN at all times except when unloading. This will help relieve pressure variances due to changes in ambient temperature, friction, product expansion, etc.

⚠ DANGER

The tank trailer shall not be operated if any of the following conditions exist:

- **Damaged to the lighting fixtures, wiring or electrical conduits, or inoperative lights.**
- **Leaking or malfunctioning equipment**
- **Damage to the tractor or tank trailer, including, but not limited to, interior damage**
- **Inoperative brake systems (primary or parking)**
- **Vents or valves plugged, inoperative or removed. A plugged or inoperative vent or valve can cause extensive vessel damage if the design pressure is exceeded or a vacuum situation is created.**

Failure to correct or repair any of these conditions may result in extensive property damage and/or serious personal injury, including death.

⚠ WARNING

Proper operation of the tank trailer primary brake system is essential for the safe operation of the vehicle. A functional system check is necessary each time the tank trailer is put into service.

IMPORTANT SAFETY MESSAGES

⚠ DANGER

Like any other vehicle, tank trailers can tip or slide out of control if turns are negotiated at too high a speed or when making violent maneuvers such as abrupt lane changes. Such unsafe and improper operation may cause serious personal injury, including death, to the operator, handlers and bystanders.

⚠ WARNING

If the tank trailer is to be uncoupled in mud, snow or sand, use extra shoring to provide an adequate base for the landing gear supports.

⚠ WARNING

Never set a loaded tank trailer on landing legs that are not intended for this purpose. Never set a multiple compartment tank trailer with only the front compartment loaded on the landing legs.

⚠ DANGER

Mechanical uncaging of the spring brakes is not recommended. Under no circumstances should a trailer with a mechanically uncaged spring brake be pulled in transit. Such unsafe and improper operation may cause serious personal injury, including death, to operator, handlers and bystanders.

IMPORTANT SAFETY MESSAGES

⚠ WARNING

Proper operation of the tank trailer primary brake system is essential for the safe operation of the vehicle. A functional system check is necessary each time the tank trailer is put into service.

⚠ WARNING

If the tank trailer is to be uncoupled in mud, snow or sand, use extra shoring to provide an adequate base for the landing gear supports.

⚠ DANGER

The top of the tank is not intended for use as a heavy work area. Observe the following procedures when the ladder or walkway must be used:

- **The use of the ladder and walkway is recommended ONLY when other access is unavailable**
- **Always keep three (3) limbs, either both hands and one foot or both feet and one hand, in firm contact with the ladder when in use**
- **When the top of the tank must be used as a work area, a stationary platform with guard rails should be used, a safety harness should be worn, and the abrasive surface at the top of the tank should be kept free of oil, grease and/or product**
- **If the abrasive surface is worn or missing, replace it immediately**

Failure to follow these procedures may cause serious personal injury, including death.

IMPORTANT SAFETY MESSAGES

⚠ WARNING

Never set a loaded tank trailer on landing legs that are not intended for this purpose. Never set a multiple compartment tank trailer with only the front compartment loaded on the landing legs.

⚠ DANGER

Check all vents daily to ensure their proper operation. Consult the individual manufacturer's data for proper maintenance. Failure to do so may result in severe damage to the tank trailer.

⚠ DANGER

Mechanical uncaging of the spring brakes is not recommended. Under no circumstances should a trailer with a mechanically uncaged spring brake be pulled in transit. Such unsafe and improper operation may cause serious personal injury, including death, to operator, handlers and bystanders.

⚠ WARNING

When using a fill line in lieu of top loading, be aware that product may not distribute evenly. Uneven distribution of product may cause the rear axles to become overloaded to the point where the Gross Axle Weight Rating (GAWR) may be exceeded, even though the GVWR may not be, and must be corrected before continued operation of the trailer.

IMPORTANT SAFETY MESSAGES

⚠ WARNING

Some substances being loaded and unloaded may be hazardous. Know what you are dealing with and where to acquire first aid in case of an emergency.

⚠ DANGER

NEVER open a manhole of adjust a latch unless the tank is completely depressurized. Even a slight amount of residual pressure will cause a manhole cover to fly open when unlatched, causing serious personal injury, including death.

⚠ CAUTION

Replace gaskets when they are broken, crushed, swollen or no longer provide an adequate seal. Use only HEIL or OEM replacement parts.

⚠ DANGER

Under no circumstances should a dry bulk trailer be loaded with product having a temperature higher than 180° F. Severe structural and metallurgical damage may occur, causing serious personal injury, including death.

IMPORTANT SAFETY MESSAGES

⚠ WARNING

Before being put into service each day, the unit should be attached to a blower and all valves throttled to ensure all hoses, piping and the tank are free of moisture.

If the unit is equipped with type "C" aeration, the ¼" drain plugs have been removed from the bottom of the aeration pads to aid in drying. These plugs must be reinstalled after the aforementioned precautions have been taken and before the unit is put into service. The plugs are located in the manual package.

⚠ DANGER

Do not exceed recommended working pressures. If the pressure rises above safe limits, shut down the blower immediately and investigate. Abnormal pressures can cause severe damage to the tank, and cause serious personal injury, including death.

⚠ CAUTION

Never discharge a payload into a storage facility of unknown contents or capacity. Check to ensure the storage facility will accept the total payload.

IMPORTANT SAFETY MESSAGES

DANGER

Never uncouple a discharge hose until all pressure has been removed. Residual pressure can cause a hose to fly free, causing serious personal injury, including death.

DANGER

When using a two piece rim, always deflate the tire prior to removal from the tank trailer. The rim and ring may come apart with explosive force, causing serious personal injury, including death.

WARNING

Insufficient mounting torque can cause wheel shimmy, resulting in damage to wheel and axle parts and damaged tires. Excessive mounting torque can cause studs to break and discs to crack in the stud hole area.

SAFETY DECALS

SAFETY DECALS ARE PROVIDED WITH YOUR HEIL DRY BULK MATERIALS TRANSPORT . PLEASE CAREFULLY READ THE MESSAGES CONTAINED WITHIN THE DECALS AND BE ALERT TO THE POSSIBLILITY OF PERSONAL INJURY OR DEATH.

WARNING

Do not exceed working pressure. If pressure rises above limits, shut down immediately and investigate.

WARNING

NEVER open manhole unless tank is completely depressurized. Even a slight amount of residual pressure will cause manhole to fly open when unlatched.

WARNING

The Relief Valve must be operational to maintain system pressure within safe limits. Failure to properly maintain the relief valve may cause property damage, potential injuries and death.

WARNING

When unloading, the discharge hose must be secured at both ends prior to pressurizing unit. Always relieve pressure in discharge hose before disconnecting it.

NOTICE

Blowdown valve should be OPEN at all times except when unloading. This will help relieve pressure buildup due to changes in ambient temperature, friction, product expansion, etc.

WARNING

To avoid suffocation, never enter a tank containing pulverants, liquids, flammable or caustic materials. Always follow all confined space entry procedures.

CAUTION

To avoid product contamination or mixing of incompatible materials, clean tank thoroughly before switching payloads.

CAUTION

To prevent a vacuum from developing when unloading without pressure, open manhole before opening discharge valve.

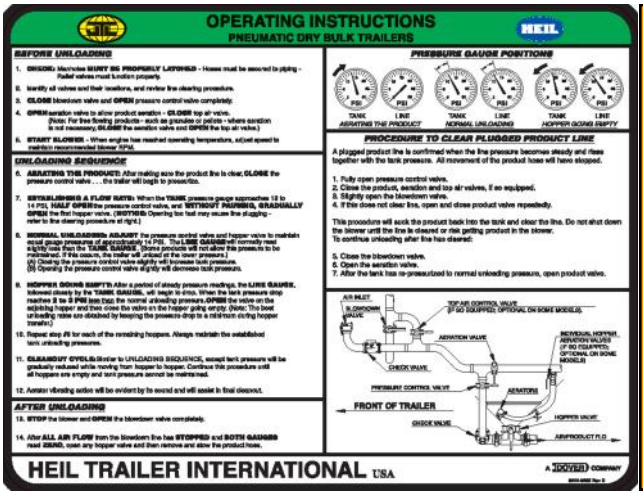

WARNING

Never operate this bulk transport unless you are fully aware of the location of all the control valves and shut down procedure.

CAUTION

Vehicle safety checks should be performed daily prior to operation.

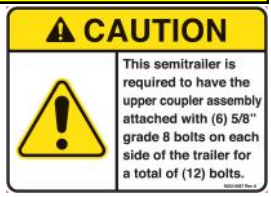

CAUTION

If a leak is discovered during operation, shut down immediately and repair the leak.

CAUTION

To avoid spillage, product discharge valves must be closed prior to loading and while in transit.

Notice

All check valves must be operational to prevent product back-up into the supply lines.

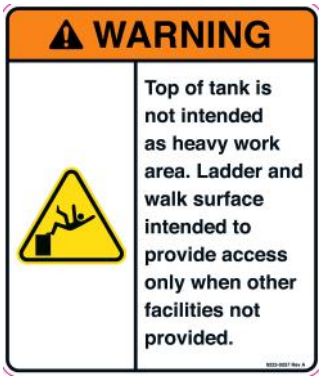

WARNING

Maintain non-skid surface at top of tank free of ice, snow, sleet, rain, oil, grease, etc. prior to climbing on top.

WARNING

Decals are posted on the tank to alert the operator of potential dangers. Replace decals when illegible.

General Nomenclature

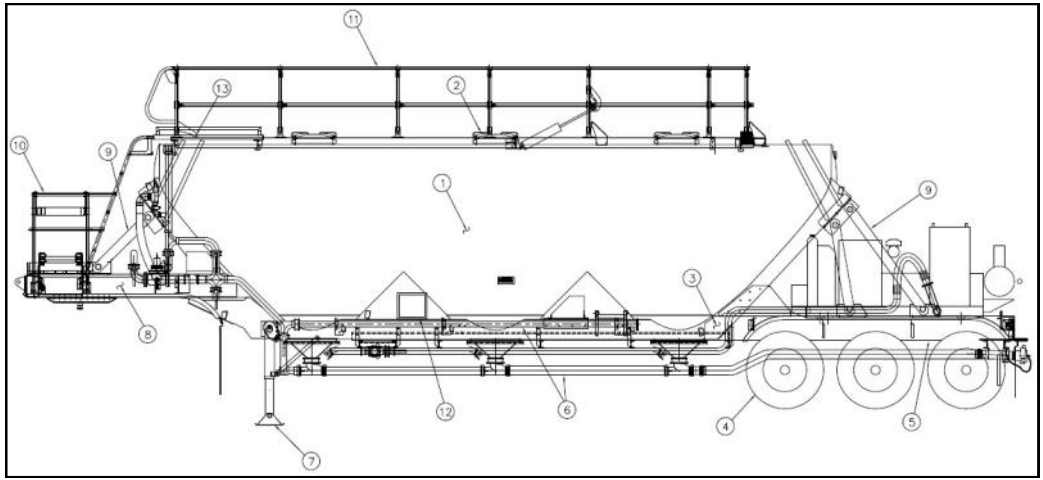

1. Tank Proper
2. Manholes
3. Rear Structure
4. Axles and Suspension
5. Brakes
6. Aeration and Discharge Systems
7. Supports
8. Front Structure
9. Struts
10. Landing Platform
11. Folding Handrails
12. Folding Handrail Controls
13. Folding Handrail Locking Devices

GENERAL NOMENCLATURE

1. **TANK PROPER-** Aluminum, construction; 3 hoppers; capacity 1240ft^3
2. **MANHOLES–** Located above hopper; equipped with two safety latches, aluminum cams, rubber stop and self-seating gasket.
3. **REAR STRUCTURE–** Welded high tensile steel construction bolted to tank proper.
4. **AXLES AND SUSPENSION-** Closed tandem integral axle air ride suspension.
5. **BRAKES-** Full air; wheel brakes are drum-shoe type, equipped with slack adjusters.
6. **AERATION AND DISCHARGE SYSTEMS-** Designed for fast product discharge. See page 25.
7. **SUPPORTS-** Manually operated two-speed raising/lowering; equipped with sand shoes.
8. **FRONT STRUCTURE-** Welded high tensile steel construction bolted to tank proper.
9. **STRUTS** - Pinned all aluminum construction bolted to tank framing.
10. **LANDING PLATFORM -** Platform walkway with handrails forming an access area leading to the ladder to top of tank.
11. **FOLDING HANDRAILS -** Secondary mechanical fall protection device intended to augment primary facility equipment and procedures.
12. **FOLDING HANDRAIL CONTROL CABINET -** Weather tight fiberglass enclosure housing folding handrail control and system pressure gauges.
13. **FOLDING HANDRAIL SAFETY SWITCHES AND LOCKOUT PINS -** Safety devices used to prevent folding handrails from inadvertently lowering while operator is on top of trailer.

PIPING SYSTEM COMPONENTS

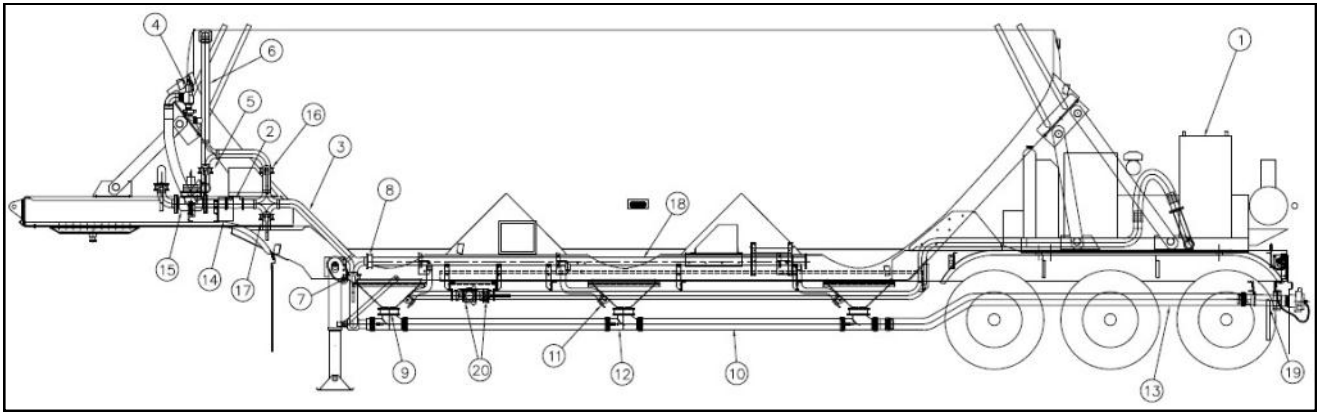

1. Air Supply Blower

2. Main Air Supply Line Check Valve

3. Main Air Supply Line

4. Pressure Relief Valve

5. Blow Down Valve

6. Blow Down Line

7. Pressure Control Valve

8. Aeration Control Valve

9 Product Discharge Valve

10. Product Discharge Line

11. Aerator

12. Product Discharge Tee

13. Rear Discharge Line

14. Tank Pressure Gauges

15. Kimray Valve

16. Top Air Line

17. Air Inlet Bleed Valve

18. Aeration Manifold

19. Main Line Bleed Valve

20. Auxiliary Air Inlet and Valve

PIPING SYSTEM COMPONENT DESCRIPTIONS

1. **AIR SUPPLY BLOWER —** On-board supply of air for unloading trailer.

2. MAIN AIR SUPPLY LINE CHECK VALVE-permits one-direction flow from power source to tank and prevents air-borne product from backing up to power source when pressure in tank is greater than in supply lines.

3. MAIN AIR SUPPLY LINE-transfers air from tractor air supply line to aeration and discharge lines.

PIPING SYSTEM COMPONENT DESCRIPTIONS

4. PRESSURE RELIEF VALVE - Prevents pressure inside vessel from exceeding maximum operating pressure.

5. **BLOW DOWN VALVE-**Opens/closes blowdown line to atmosphere.

6. BLOW DOWN LINE-Exhausts tank air to atmosphere. Used to pressurize tank when top air kit is installed.

PIPING SYSTEM COMPONENT DESCRIPTIONS

7. PRESSURE CONTROL VALVE - Controls product line pressure. Used to pressurize product line to discharge product from line to silo/receiver vessel.

8. AERATION CONTROL VALVE - Controls main air supply line pressure. Used to control air to aerators.

9. PRODUCT DISCHARGE VALVE - Regulates the flow of aerated material from the hopper to the product tee.

PIPING SYSTEM COMPONENT DESCRIPTIONS

10. PRODUCT DISCHARGE LINE - Facilitates pneumatic discharge of materials from hoppers.

11. AERATION - Induces air into hopper to aerate product and make it flow-able. See figure 9 for identification of aeration units. Refer to Aeration System Operation on page 31 for detailed description.

12. PRODUCT DISCHARGE TEE - Facilitates transfer of materials from hopper to product line.

PIPING SYSTEM COMPONENT DESCRIPTIONS

13. REAR DISCHARGE LINE - Extension of product line to rear of trailer. Used to connect vessel to silo/receiving vessel.

14. TANK PRESSURE GAUGES-Register air pressure in tank and product line.

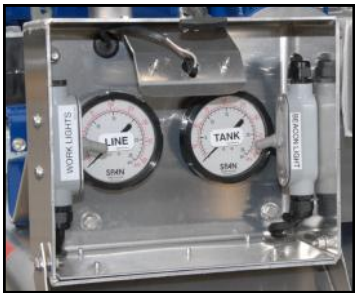

WARNING

DO NOT EXCEED MAXIMUM RECOMMENDED PRESSURE

If pressure rises above limits, shut down immediately and investigate.

15. KIMRAY VALVE -Regulates downstream air pressure.

PIPING SYSTEM COMPONENT DESCRIPTIONS

16. TOP AIR LINE -Provides a means to pressurize vessel to force material down and out of hoppers.

17. AIR INLET BLEED VALVE - Allows bleed off and control of air supply in main air supply line.

18. AERATION MANIFOLD-Directs supply air to individual aeration lines.

PIPING SYSTEM COMPONENT DESCRIPTIONS

19. MAIN LINE BLEED VALVE - Provides a means of venting pressure from product discharge line.

20. AUXILIARY AIR INLET AND VALVE— provides connection of trailer-mounted air supply unit or alternative air source. Includes 3" butterfly valve which, when closed, prevents air from alternative source from flowing upstream. **Always leave this valve open unless alternative air source is used instead of the on-board blower.** Weco 3" hammer union provided for connection of alternative air source.

FOLDING HANDRAIL DESCRIPTION AND OPERATION

This Heil Super Jet trailer is equipped with a mechanical folding handrail system intended as a secondary fall protection device. When used in conjunction with other facility safety equipment, it helps to protect an operator working on top of the trailer. The folding handrail system consists of the following:

1. Vertical aluminum stanchions and horizontal aluminum rails
2. Pneumatic cylinders, one located on each side, for each handrail.
3. Safety switches and locking pins, one located on each side, for each handrail.

a. Engage safety switches (one each side) while working on top of trailer to prevent inadvertent ground operation.

b. Insert mechanical locking pins (one each side) through valve bracket and locking tab on stanchion to keep handrails from folding down in the event that air cylinder pressure bleeds off. DO NOT insert locking pins unless air safety switches are flipped forward.

SLIDING LADDER DESCRIPTION

This Heil Super Jet trailer is equipped with a retractable ladder. When used in conjunction with facility safety practices, it aides safe access to the base of the tank ladder. The retractable ladder consist of the following:

1. Vertical aluminum side rails and horizontal steps.
2. Pivoting vertical side rail guides, one for each side rail.
3. Tethered mechanical locking pin.

SLIDING LADDER OPERATION

1. Disengage mechanical locking pin.
2. Pull ladder outward and pivot down toward you while holding bottom of ladder.
3. Allow ladder to slide downward until it engages the ground.
4. Reverse procedure above to stow ladder. Ensure mechanical locking pin is engaged and securely fastened before moving trailer.

AERATION SYSTEM OPERATIONAL DESCRIPTION

In the aeration system, compressed air is injected at the base of each hopper and filters upward through to aerate the cargo and make it flow-able. If the cargo does not require aeration, the tank is pressurized through the Top Air Line. When sufficient pressure is built up in the tank, the operator opens the pressure control valve and the individual hopper discharge valves so that the air-borne product flows through the discharge line into the storage facility.

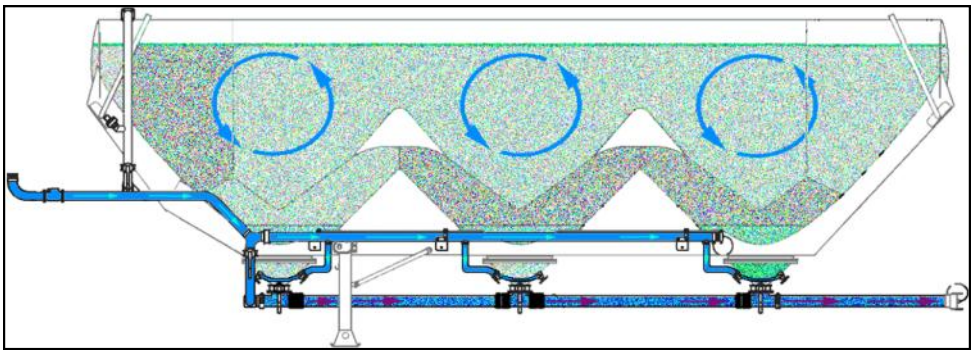

Figure 8. Simplified Aeration System Diagram

AERATION UNITS

Aerators are flexible neoprene diffusing collars designed to fluidize pulverants, granular, and wet cargoes such as slurries. Figure 9 illustrates air flow through the aerator.

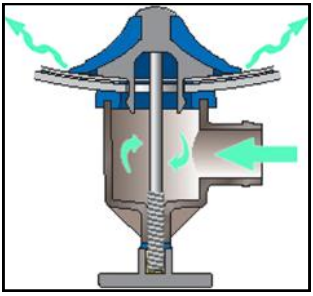

Figure 9. Aerator Air Flow

OPERATING INSTRUCTIONS

WARNING

Never operate this bulk transport unless you are fully aware of the location of all the control valves and shut down procedure.

HOOKING TRACTOR TO TRAILER

Prior to backing tractor under trailer, check the following items:

1. Trailer brakes are set or wheels blocked to prevent trailer from rolling.
2. Upper 5th wheel is at approximate height of lower 5th wheel.
3. Latch on lower 5th wheel is in "Open" position.
4. All personnel are clear of the area.

Then proceed as follows:

1. Back tractor under trailer, aligning king pin with slot in lower 5th wheel. When latch "sets" around king pin, check hookup by attempting to pull forward.
2. Shut down engine and apply parking brake.
3. Double Check latch on 5th wheel to ensure that it is fully engaged.
4. Connect tractor supply and control brake hoses to glad hands on trailer. The glad hands are marked for correct installation.
5. Connect electrical connector to receptacle on trailer.
6. Raise landing gear supports.
7. Check brakes and lights for proper operation.
8. Anti-Lock pilot light must be lit when brakes are applied.

SAFETY CHECK

A vehicle safety check should be performed daily prior to operation. See Preventive Maintenance Section.

DANGER

NEVER open manhole unless tank is completely depressurized. Even a slight amount of residual pressure will cause manhole to fly open when unlatched.

START-UP

When units are parked, especially over night, moisture can form inside the tank and piping. To clear out most of the moisture, remove dust cap on discharge line, start compressor or blower and pressurize unit. Then open each of the hopper discharge valves to blow out the unit. This procedure will help prevent the discharge valves and aerators from becoming clogged.

CAUTION

Blowdown valve should be OPEN at all times except when unloading. This will help relieve pressure buildup due to changes in ambient temperature, friction, product expansion, etc.

LOADING

The type of cargo being hauled and the loading situation will determine the best method of loading. Heavier materials such as sand and sugar can normally be loaded through the center manhole and allowed to overflow into the adjoining hoppers. Light and bulky products such as flour or plastic pellets should be loaded through the individual manholes for better distribution. If so equipped, the pneumatic loading line offers an alternate loading method.

1. Close all valves except the blowdown valve before loading and while in transit.
2. Connect load line hose from facility
3. Following facility guidelines and procedures, engage facility compressor to initiate product flow as shown in Figure 10.

Figure 10. Schlumberger truck at loading facility

4. Monitor loading process.

5. Once the desired fill is achieved, disengage facility compressor to cease loading following facility guidelines and procedures.

6. Ensure all connections and openings (fill lines, manholes...etc.) are closed and secured for safe transportation.

7. Ensure blowdown/vent line is open to avoid pressure buildup due to changes in ambient temperature and product expansion during transit.

Figure 11. Schlumberger loading facility

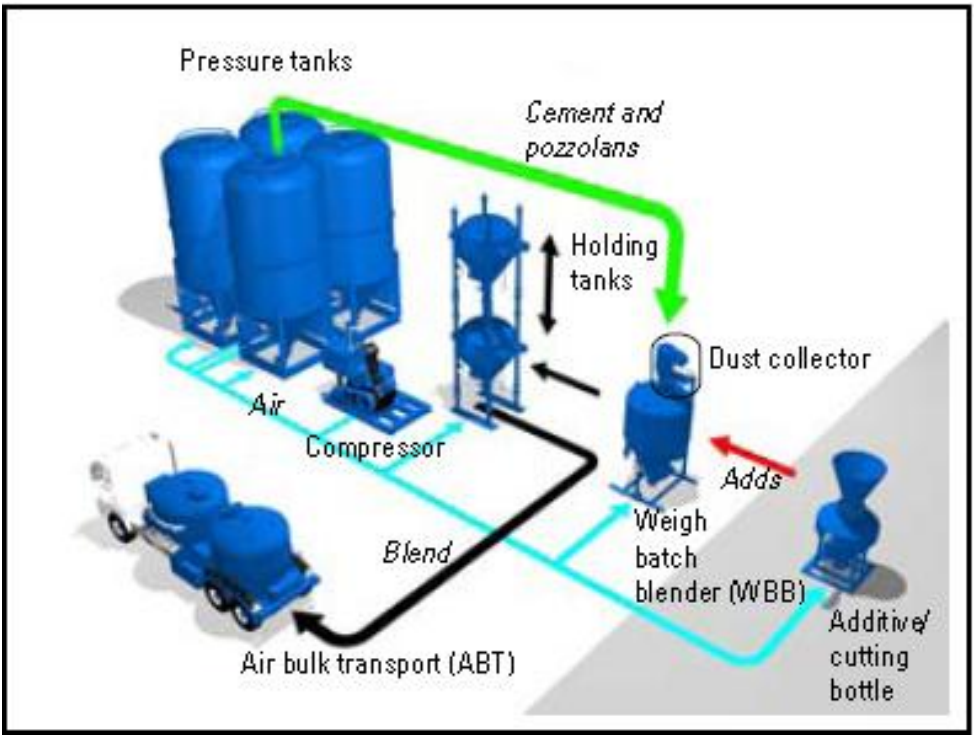

UNLOADING

1. Position trailer for optimum unloading. See page 37.
2. Retrieve discharge hose and connect it to the discharge line. Attach opposite end of hose to adapter on storage facility fill line.

NOTICE

Never discharge payload into a storage facility of unknown contents or capacity. Check to ensure that the storage facility will accept the total payload.

DANGER

When unloading, the discharge hose must be secured at both ends prior to pressurizing unit. A loose hose will bull whip potentially causing injury.

3. Open the pressure control valve.
4. Engage blower or compressor.
5. Open all aeration valves and close pressure control valve and blow down valve. Pressurize unit. If cargo does not require aeration, open the Top Air Supply Valve (Item 16, Page 10) to pressurize the unit.
6. When unit has reached operating pressure open the proportioning valve ½ to ¾ of full open.
7. SLOWLY open discharge valve on rear hopper.
8. Adjust the pressure control valve to maintain maximum operating pressure and slight movement of discharge hose.
9. Close the front and center individual hopper aeration control valves, on units so equipped.
10. When tank pressure begins to drop rapidly, close rear discharge valve.
11. Open aeration valve on center hopper.
12. SLOWLY open the discharge valve on center hopper.
13. Close the aeration valve on rear hopper.

14. Readjust pressure control valve if necessary.

15. When tank pressure begins to drop rapidly, close center discharge valve.

NOTICE

When pressurizing unit, look for air leaks. If any are found, shut down immediately and repair the leak.

16. Open aeration valve on front hopper.

17. SLOWLY open front hopper discharge valve.

18. Close aeration valve on center hopper.

19. When tank pressure begins to drop rapidly, close front discharge valve.

Warning

Do not exceed working pressure. If pressure rises above limits, shut down immediately and investigate.

20. Purge unit by opening all aeration valves and opening and closing discharge valves rear to front.

21. Open blow down line to return the unit to atmospheric pressure.

22. Disengage blower or compressor.

CAUTION

Before opening blowdown line, make sure no one is in line of air stream.

23. Disconnect and stow discharge hose.

DANGER

Always relieve pressure in discharge hose before disconnecting it.

24. Close all valves except the blow down valve.

NOTICE

Variations or deviations to the unloading procedure may be necessary due to the type of product being unloaded or the nature of the unloading site. Operating more than one hopper at a time is common with extremely large capacity blowers or a combination of compressor and blower only. A second and third hopper can be activated in maintain desirable product to air mixture.

OPERATING TIPS

MINIMIZING UNLOADING TIME

The HEIL "Super Jet" is designed with one of the fastest pneumatic discharges in the industry. Unloading time will depend, however, on variables such as type of product being unloaded, unloading site, condition of equipment, etc. The following points should be considered.

1. Vertical positioning of discharge hose results in smoother product flow. Product tends to "settle" in portions of hose which runs horizontally (see figure 12). This accumulation of product will restrict product flow, will increase unloading time, and may eventually clog the line.

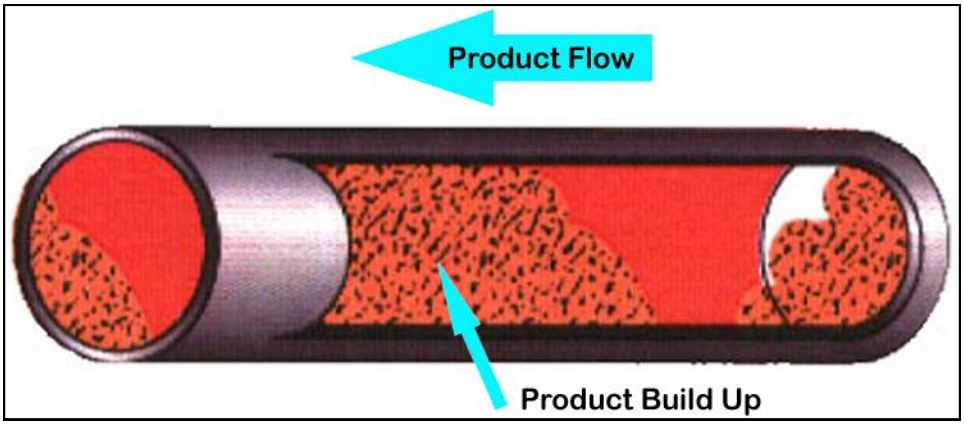

Figure 12. Product Flow and Build Up

Comparing product flow through a hose in the vertical portion of hose (figure 13). It can readily be seen that vertical positioning of hose results in smoother product flow.

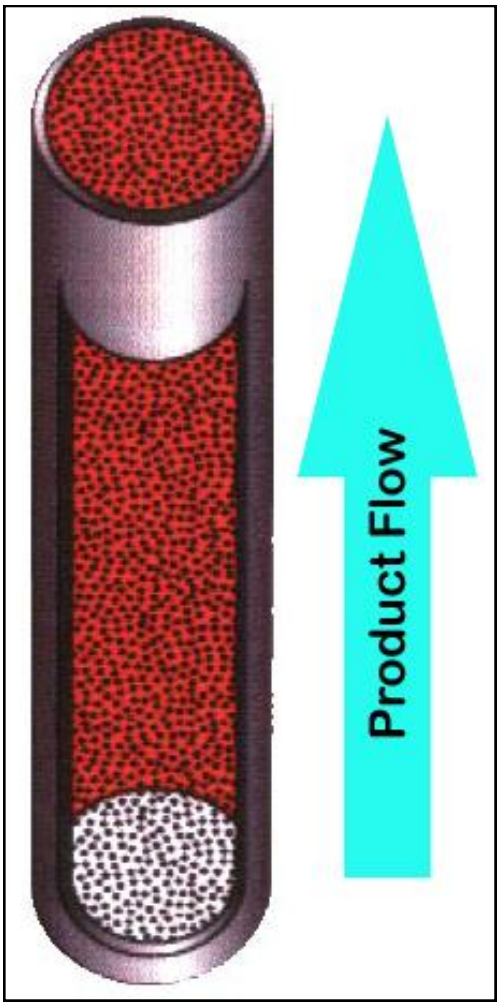

Figure 13. Vertical Product Flow

NOTICE

If discharge hose must be run horizontally for any considerable distance, elevate the hose at intervals to create slight "humps" in the hose. This will help keep the product flowing freely.

MINIMIZING UNLOADING TIME (CON'T.)

2. The relative density (product to air ratio) decreases as the elevation increases. The higher the storage facility, the longer it will take to unload. Figure 14, illustrates the relative density at various elevations. Note that as the product head decreases, the air velocity will increase and air pressure will decrease.

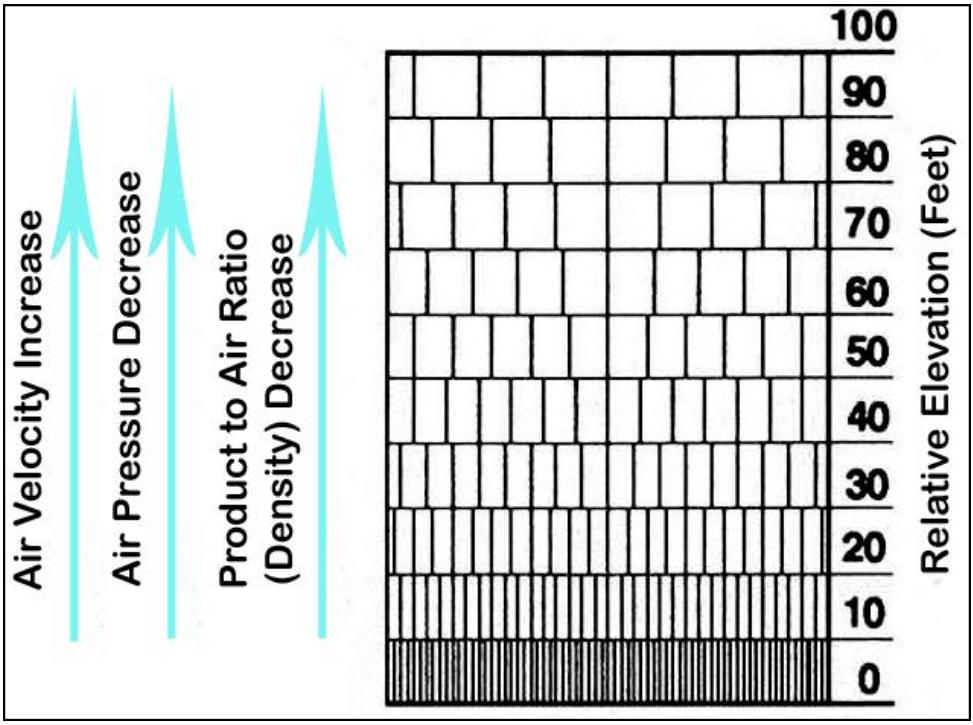

Figure 14. Relative Density at Various Elevations

3. Heavy, fine materials such as sand or sugar require considerably more unloading time. Light, bulky products offer more resistance and are more easily carried by the air stream. Use the pressure control valve and the product discharge valve to maintain the optimum product-to air ratio for the type of product being unloaded.

SUS-739 Diesel Powered Blower (1000 CFM)

OPERATION

1. Check the unit for proper lubrication and proper oil level.

2. Open trailer un-loader valve.

3. Starting engine turn key to on position wait 5 seconds for system to load then turn key to start.

3. Idle the engine to warm up blower at zero pressure for 15 minutes at no load at this time check for hot spots and other indications of interference.

4. Slowly increase engine speed to 2100 RPM at zero blower pressure.

5. Close trailer un-loader valve.

6. Unit is operational at this time.

7. If malfunctions occur do not continue to operate. Problems such as knocking rotors can cause serious damage if the unit is operated without correction.

Maintenance

1. Shaft driveline inspect and grease every 50 hours.

2. Air Filter- inspect and change as needed every 75 hrs.

3. Compressor-refer to enclosed Gardner Denver manual.

4. CAT engine maintain as manufactures recommendation.

For further support and parts list for your blower please contact Gardner Denver.

Phone: (217) 222-5400

www.gardnerdenver.com

PREVENTIVE MAINTENANCE

INTRODUCTION

Lubrication and service performed at regular intervals will keep the DRY BULK TRANSPORT in top operating condition for the longest period of time. The importance of regular inspection cannot be over-emphasized. Making necessary adjustments, tightening nuts and bolts, checking air lines, lights and wiring connections will help prevent serious trouble and delays on the road.

The driver should be the first line of defense in Preventive Maintenance. A conscientious and alert operator will promptly report all need for adjustment or repair. A vehicle safety check should be performed daily prior to operation.

LUBRICANTS

It is not the policy of the Heil Trailer International to publish lists of approved lubricants or guarantee lubricant performance. The responsibility for the quality of any lubricant rests solely with the distributor or manufacturer of the lubricant.

DELIVERY INSPECTION

All units are thoroughly tested and inspected at the factory. As an added precaution, the following items should be double checked upon delivery.

Axles..... Check king pin alignment

Wheels.....Check wheel lug torque

Brakes.....Check for proper operation and adjustment

Lights and Wiring.....Check lights for proper operation

Air Spring Bolts.....Check for proper torque

Shock Absorber Bolts.....Check for proper torque

Suspension Pivot Connection Bolts.....Check for proper torque

Piping.....Check for leaks

Manhole Cover.....Check clamping device for proper cover closure

Landing Leg Support Bolts.....Check for proper torque

Front and Rear Structure Bolts.....Check for proper torque

PREVENTIVE MAINTENANCE SCHEDULE

DAILY

Anti-Lock Brake System.....Check for proper operation

Lights and Wiring.....Check all lights for proper operation

All Bolts.....Visually check for tightness

Air Reservoirs.....Drain at the end of each shift

Tires.....Check for proper inflation and inflate

WEEKLY

Wheel Seals.....Check for oil leakage and oil level

Wheel Lugs.....Check for proper torque

Wiring.....Check all connections

Suspension Bolts.....Check for proper torque

Piping.....Check for leaks and damage

Manhole.....Check clamping device for proper cover closure and check gasket for damage

Front and Rear Structure Bolts.....Check for proper torque

MONTHLY

Manhole.....Clean manhole and oil clamps

General Inspection.....Perform inspection (see page 41)

Supports.....Lubricate; check mounting bolts for proper torque

Axle Camshafts.....Lubricate all grease fittings

90 DAYS

Relief Valve.....Remove and inspect relief valve for clogs of hardened material. Bench test relief valve to ensure proper operation.

EVERY 5000 MILES

King Pin Alignment……Check for proper alignment

Brakes……..……..……Adjust as needed

Wiring……...Check for chafed or broken wires, ground wire

Connections, loose wire retaining clips and dielectric grease

Upper 5th Wheel……..……..Lubricate

Suspension……..……...Check for proper bolt torque

Piping……..……Check all piping supports-tighten if necessary

Aeration……Check all aeration tee bolts - hand tighten only

EVERY 10,000 TO 25,000 MILES

Wheel Bearings……..Verify proper end play and adjust as necessary

Brakes……..Inspect linings, free-up brake shoes and anchor pins

EVERY TWO YEARS

Aeration……..……..Inspect and replace aeration components as necessary. At a minimum, trailers in abrasive product service should be inspected every six months.

Lubrication and Service Chart

	Dailey	Weekly	Monthly	5,000 Miles	10K-25K Miles	Annually
Drain any water from air reservoirs	X					
Check manhole clamps, cover closures and gaskets		X				
Clean manhole and lubricate its clamps			X			
Check the operation of all lights	X					
Check all wiring connections		X				
Check for broken or chafed wires				X		
Check brake operation	X					
Adjust brakes				X		
Inspect slack adjusters, brake linings and brake chambers					X	
Free up brake shoes and anchor pins					X	
Check condition of walkways and toe rails		X				
Check suspension bolt torque				X		
Check tires for damage and wear	X					
Check axle alignment to king pin				X		
Check lubricant level and oil seals on the axles		X				
Check ladder bolt tightness		X				
Check the operation of pressure relief device (	X					
Inspect aeration system	X					
Lubricate grease fittings on axle camshafts			X			
Check wheel bearings				X		
Check lug nut torque					X	
Check piping supports and mounting fastener tightness		X				
Check front and rear structure fastener tightness		X				
Check all valves, piping and manholes for leakage	X					
Check landing gear mounting fastener tightness		X				
Check upper coupler fastener torque	X					
Check king pin wear			X			
Lubricate upper coupler plate and king pin	X					
Visually check tightness of all fasteners	X					
Check all supports and braces			X			

Notice

Tank trailer should be inspected periodically to ensure it meets D.O.T. requirements.
Refer to the D.O.T. Transportation of Hazardous Materials Handbook (paragraph 177.824) if hazardous materials at to be hauled.

LUBRICATION & SERVICE

1. **Manhole Cover-**(Weekly)-check clamping device for proper cover closure; check gasket for damage. (Monthly)-Clean manhole gasket and lubricate clamps.
2. **Lights and Wiring-**(Daily)-check all lights for proper operation. (Weekly) -Check all connections. (Every 5000 miles)-Check for chafed or broken wires.
3. **Anti-Lock Brake System-**(Daily)-Check for proper operation. Refer to Anti-Lock System Maintenance Manual. (Every 5000 miles)-Adjust brakes. (Every 10,000 to 25,000 miles)-Inspect linings, free-up brake shoes and anchor pins.
4. **Rear Structure-**(Weekly)-Check bolts for proper torque (150 lb-ft)
5. **Suspension-**(Every 5000 miles)-Check for proper bolt torque. See page 48 for torque chart.
6. **Tires-**(Daily)-Check for proper inflation, cuts or other damage.
7. **Axles-**(Weekly)-Check oil level and for leakage around oil seals. Check pivot bolt connections for proper torque. (Every 5000 miles) Check axle alignment to king pin.
8. **Wheels-**(Weekly)-Check lug nuts or bolts for proper torque. (Every 10,000 to 25,000 miles) Check wheel bearings. Tighten or replace as required.
9. **Aeration -**Clean or replace as required. (Every 2 years)
10. **Piping-**Check for loose clamps, damaged hoses or leaks. (Monthly) Perform general inspection.
11. **Supports-**(Monthly)-Lubricate; check mounting bolts for proper torque (150 lb-ft).
12. **Front Structure-**(Weekly)-Check bolts for proper torque (150 lb-ft).

LUBRICATION AND SERVICE (CONTINUED)

13. Upper 5th Wheel-(Every 5000 miles) Lubricate with multipurpose grease.

14. Compressor or Blower-Service according to manufacturer's recommendations.

GENERAL INSPECTION-AERATION SYSTEM

The following inspection should be performed monthly.

1. Check pressure gauges for accuracy.
2. Close manhole covers. Close all valves except aeration valves. Remove dust cap from product line.
3. Start compressor (or blower) and pressurize tank until relief valve opens. **DO NOT EXCEED MAXIMUM OPERATING PRESSURE**

WARNING

If relief valve does not open at pressure specified on valve, shut off compressor or blower and correct the cause of the inoperative relief valve.

NOTICE

Compressors can be severely damaged if operated at speeds and pressures higher than rated and if the air filter is clogged. Check operating speed and pressure rating of the compressor to make sure it is not running too high. See Manufacturer's recommendations.

4. After tank is pressurized, close the aeration valves and shut off compressor blower. Tank pressure should remain relatively constant. If pressure drops excessively, check for leaks in manhole cover, relief valve, blowdown valve and tank proper. If none are found with the above inspection, check for air leaks in the aeration, pressure control and product valves.

5. When inspection is complete, open blowdown valve to exhaust the air in the tank. Replace dust cap on product line. If one or more hoppers does not discharge properly, and there are no leaks in tank or valves, the following service procedure is recommended.

    1. Remove product from these sections.
    2. Check aeration line for possible plug.
    3. Check aeration device on interior of tank. Look for torn molded neoprene cone (s), rotated wear plate (s) or plugged aerator housings (see figure 16). Replace as necessary.

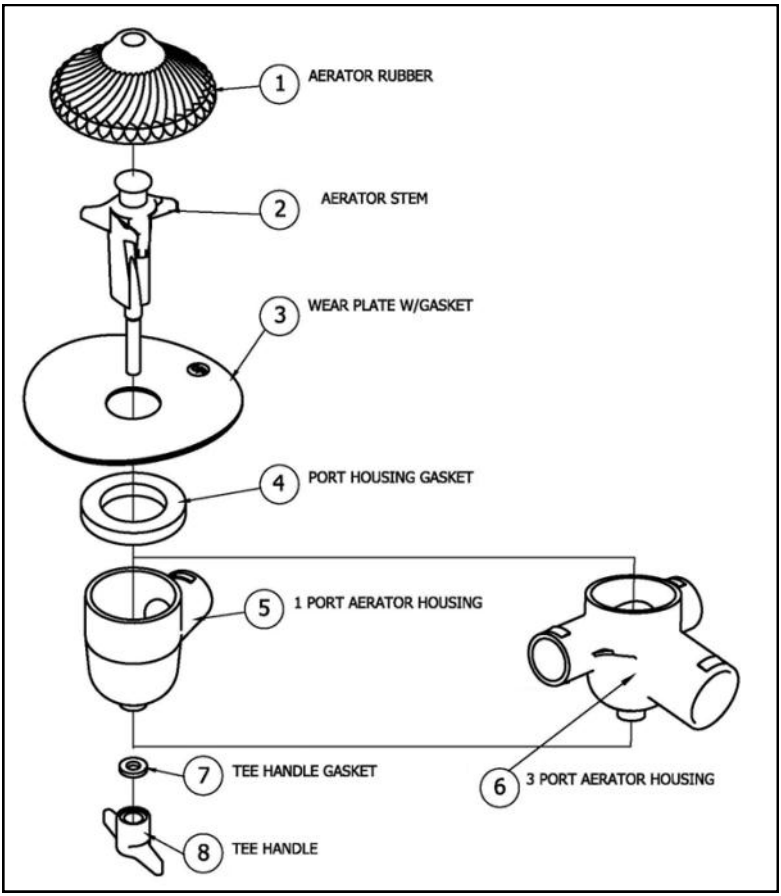

Figure 16. Exploded View of Aerator

BRAKES-MAINTENANCE & ADJUSTMENT

NOTICE

Refer to Anti-Lock Brake System Maintenance Manual for operational check and service instructions.

The wheel brakes are equipped with slack adjusters for easy brake adjustment to compensate for brake lining wear. It is recommended that slack adjuster arm travel be held to a minimum for most efficient braking action. The brakes should be adjusted when total arm travel reaches 1-1/2”.

To adjust brakes, depress lock sleeve on slack adjuster, then turn adjustment screw as required. Make sure lock sleeve returns to lock position when adjustment is complete.

Every 5000 miles, the brake camshafts should be lubricated with approved chassis lubricant. Every 10,000 to 25,000 miles, the brakes should be serviced as follows:

1. Remove wheels and hubs.
2. Inspect brake roller shafts, cam rollers, anchor pins, camshaft support bushings, spider bushings and camshaft for wear and replace if necessary. Lubricate these parts with chassis lubricant upon reassembly.
3. Inspect brake linings for wear, loose rivets and any signs of grease on the braking surface. Oil-soaked linings are not reusable and must be replaced. Check to ensure that the linings have not worn to the point that rivet heads are contacting inside surface of drum. Reline or replace brake shoes if necessary.
4. Check inside surface of drum. Rebooting of drums is not recommended, as the strength of refaced drums is greatly reduced. If drum is worn, replace it.
5. Service the wheel bearings and seals if required. Reassemble hubs and wheels.

WHEEL BEARINGS & SEALS

The wheel hub revolves around the axle spindle on two roller bearings. The bearings are lubricated and the hub cavity is sealed against leakage by a seal which rides around an axle ring on the spindle shoulder. Figure 18 illustrates the bearing and seal arrangement.

Check oil level and for leaks around the oil seal at least once a week. If low, refill hub to oil level line on hub cap. Heil recommends using 75W90 Synthetic Gear Oil. For best results and wheel end life, use only compatible lubricant products.

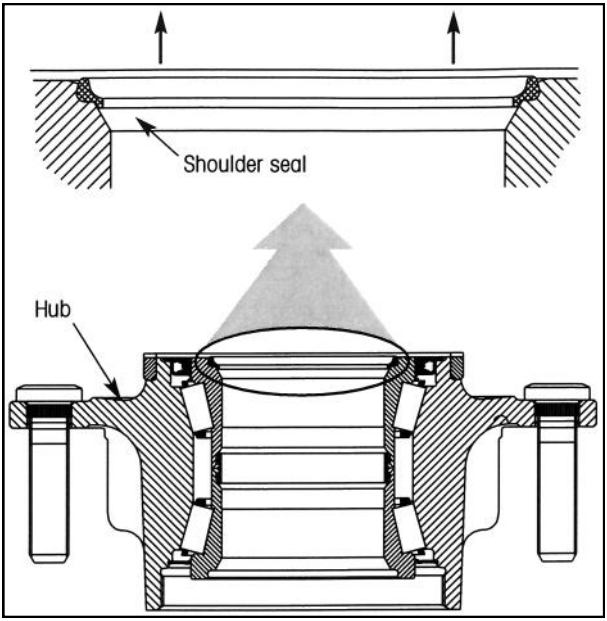

Figure 18. Cross Section View of Wheel Hub

Wheel Bearing Adjustment

Bearing adjustment should be 0.001”-0.010” end play and a minimum of preload. Use the following procedure:

1. Tighten inner jam nut (figure 18) with a 12 inch wrench while turning wheel in both directions until there is a slight bind which indicates all bearing surfaces are in contact.

Wheel Bearing Adjustment (continued)

2. Back off inner jam nut 1/3 turn to allow the wheel to rotate freely.
3. Install washer and tighten outer jam nut.
4. Final bearing adjustment should be with 0.001” to 0.010” end play. Tighten nuts at this position.

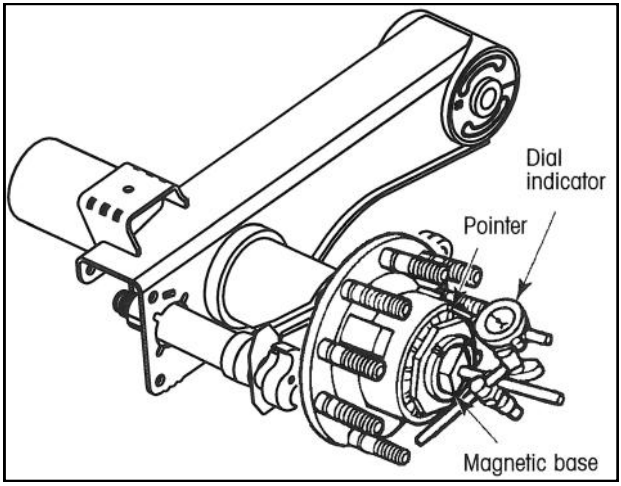

Figure 19. End Play Adjustment

Oil Seal Replacement

If oil leakage around the inner oil seal is noted, replace the oil seal (and axle ring, if required) as follows:

1. Remove wheels and hub
2. Remove and discard old seal.
3. Inspect axle ring. If pitted or worn, replace as follows:
   a. Remove old ring. Take care not to damage spindle.
   b. Clean spindle thoroughly. Shoulder area must be smooth and free from weld spatter and burrs.
   c. If shoulder is not completely smooth apply sealer No. 2 to correct any defects and ensure an oil-tight fit.

Oil Seal Replacement (continued)

d. Using axle tool, drive the axle ring firmly on shoulder. Edge of axle ring must be parallel and flush with shoulder face. Remove excess sealer, if used.

4. Install oil seal in wheel hub as follows:

a. Remove all burrs from inside hub bore.

b. If seal is not pre-coated with BLU-SEAL, or if wheel hub bore is not entirely free of nicks or burrs, apply a thin coat of sealer No. 2 to the O.D. perimeter of the oil seal.

c. Lay wheel down, brake drum up. Check to ensure that hub cavity is clear of old grease, grit and metal particles-steam clean if possible. Check bearing cones on spindle for proper slip fit. Install inner bearing in hub bore. Place seal in starting position in bore.

d. Using hub tool and a hammer, drive seal squarely and evenly into bore. Seal should bottom evenly all around against bearing cup. DO NOT continue to hammer after seal has bottomed evenly, as damage to the seal will result.

5. Coat seal lip and inside diameter of inner bearing cone, then install wheel on axle. Take care not to damage seal during installation. If wheel does not slip back in place easily, remove and check for burrs or possible component damage.

6. Install outer bearing, jam nuts and washer. Adjust bearing preload (see Wheel Bearing Adjustment).

7. Install gasket and hub cap.

8. Refill hub with recommended oil. See Wheel Bearings and Seals. 1 to 1-1/2 pints are required per hub, depending on wheel well design. A minimum of 1 pint is required for proper lubrication. Allow plenty of time for the oil to seep through the bearings.

9. Re-install vent plug.

WHEEL & TIRE MAINTENANCE

Proper tire inflation and correct installation of rims and wheels is essential to safe, economical, trouble-free service.

Check tire pressures daily. Recommended inflation pressure is noted on VIN Data Plate. DO NOT over-inflate tires, as this is a common cause of rim failures and accidents. Never run vehicle on one tire of a dual wheel assembly. Loss of air in one tire of a dual set excessively overloads the other tire if the vehicle is operated in this condition.

When checking tire pressures, visually check studs and rim for looseness, cracks or other damage. Inspect tires for uneven wear, cuts, cracks, etc., which would render the tire unfit for further service. If the least doubt exists as to the tires' serviceability, replace the tire.

DANGER

Be extremely careful when working with tires and wheels. Tires and wheels can come apart with explosive force. Never attempt to disassemble a wheel with an inflated tire mounted on it.

Check wheel lug torques at least once a week. Recommended torque for the ¾-10 lug nuts on spoke wheels is 450-500 lb-ft (dry).

NOTICE

Insufficient mounting torque can cause rim slippage, resulting in broken valves, worn parts and damaged tires. Excessive mounting torque can cause damage by stripping studs, collapsing spacer bands or forcing rims into an out-of round condition.

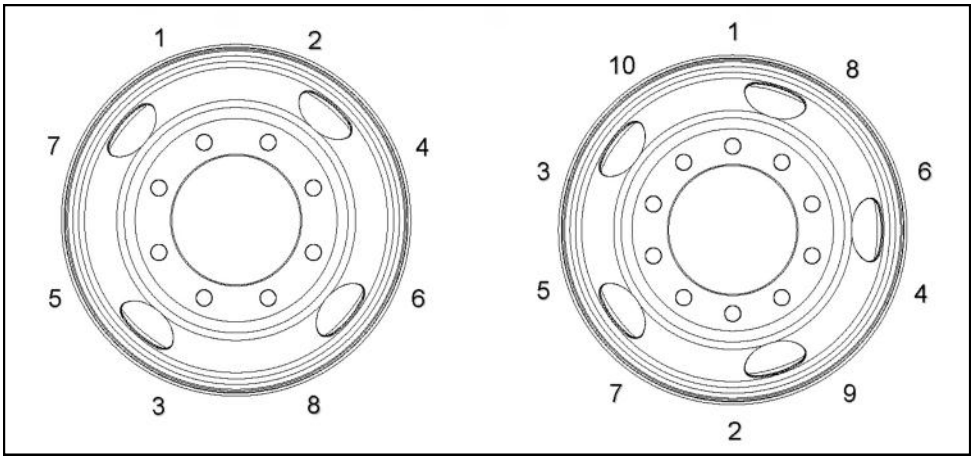

Figure 20. Disc Wheel Installation

Recommended Installation Procedure-Disc Wheels

1. Check all parts for damage, including wheels and rings. Insure that all studs, nuts and mounting faces of hub and wheels are clean and free from grease. Replace any defective parts.
2. Mount inner dual wheel over studs, being careful not to damage stud threads.
3. Mount the outer wheel, being careful not to damage stud threads and hand tighten wheel nuts.
4. Tighten nuts fully, using a crossing pattern as shown in figure 20. Be sure to tighten nuts only to the recommended torque. The correct wheel nut torque is 450-500 lb-ft (dry).

NOTICE

Insufficient mounting torque can cause wheel shimmy, resulting in damage to parts and extreme tire tread wear. Excessive mounting torque can cause studs to break and discs to crack in the stud hole area.

AXLE ALIGNMENT

Improper axle alignment will cause dog-tracking and excessive tire wear. To check alignment of axles to king pin, use the following procedure:

1. Set empty trailer on level smooth surface, disconnect trailer brakes and bleed air tank.
2. Rock trailer back and forth for a distance of approximately 10 feet to relieve any binding in brakes or suspension bushings.
3. Tow trailer straight forward for a distance of approximately 30 feet. Stop trailer with tractor gears or tractor brakes only.
4. Disconnect tractor from trailer and ensure suspension ride height is properly adjusted.
5. Adjust landing legs to level trailer and set upper coupler to the correct ride height.
6. Do not remove wheels, but remove all hub caps and install axle center extensions. Use suitable kingpin jack or center extension to insure a clear path from the kingpin centerline to the axle center extensions.
7. Measure from kingpin extensions to both front axle center extensions. This distance should be the same on both sides (A = B).
8. If not, remove and install new pivot bolts leaving them loose enough to adjust axle to square with the kingpin. Make sure there are no obstacles in front of wheels during alignment.

Notice

Pivot bolts must be replaced during realignment of the suspension.

Axle Alignment (continued)

9. Measure from front axle center extensions to rear axle center extensions. This distance should be the same of both sides (C = D). If not, remove and install new pivot bolts leaving them loose enough to adjust rear axle to parallel with front axle. The suspension should now be in proper alignment with the kingpin.

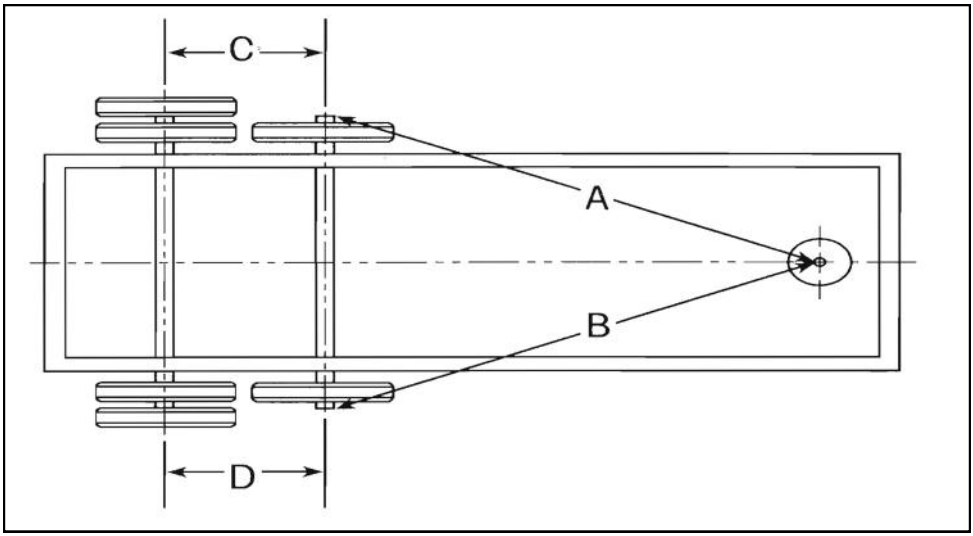

Figure 21. Trailer Alignment

10. The **QUIK-ALIGN®** style pivot connection uses two flanged collars inserted into slots on each side of the frame bracket (figure 23). The eccentric collar on the outboard side of the frame bracket is used to adjust the position of the axle during an alignment. The alignment guides on the side of the frame bracket limit the eccentric collar to rotational movement in the frame bracket slot. Rotating the eccentric collar clockwise causes the axle to move forward. Rotating the eccentric collar counterclockwise causes the axle to move rearward (figure 22). The maximum range of adjustment is ±45 degrees from the 12 o'clock position.

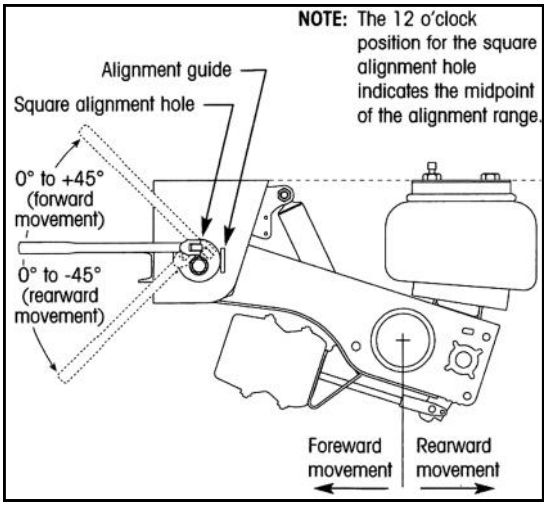

Figure 22. Quick-Align Operation

11. Using an E20 Torx socket, tighten the shear-type bolt axle pivot connection until the Torx head shears off. This ensures the proper torque of 550 ft. lbs. (±45 ft. lbs.). Pivot bolts must be replaced when trailer is aligned. **DO NOT** attempt to reuse old pivot bolts. Assembly of pivot connection shown in figure 23.

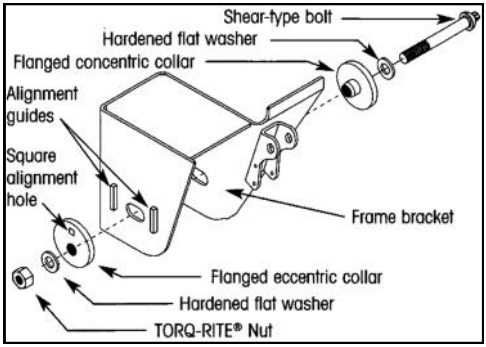

Figure 23. Pivot Connection Assembly

12. Connect tractor to trailer and connect trailer brakes on the lot. Make four or five tight figure eights and an equal number of "panic" brake stops. Bring trailer back into shop and check axle alignment. If axles are not in proper alignment, check for loose or worn bushings and bearings, loose or broken hangers, cross members, side rails or kingpin.

Trailer Suspension System

Components and General Maintenance Guidelines

HEIGHT CONTROL VALVE - The height control valve on the trailer air suspension automatically responds to the relative position of the axle and vehicle frame. It meters air into or out of the air springs. Variations in load or temperature only affect the adding or exhausting of air. The trailer air suspension is a mechanically stable suspension, only one height control valve is necessary.

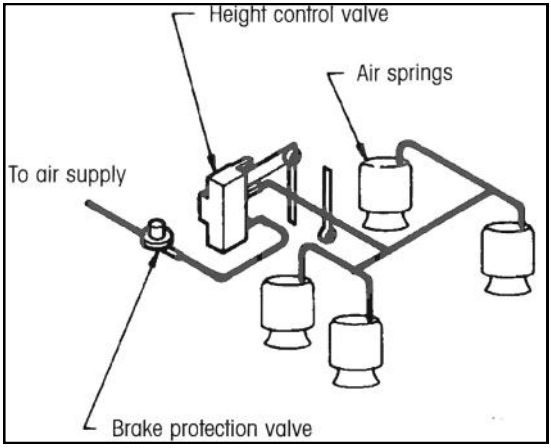

Figure 23. Suspension Height Control Valve

When the actuating lever of the height control valve moves up, the valve opens and connects the air supply to the air spring. When the actuating lever moves down, the valve shuts off the air supply and opens the exhaust port to vent excess air from the air springs. A check valve prevents the loss of air spring pressure if the air supply fails. In the central position, air does not flow in or out of the air springs.

RIDE HEIGHT ADJUSTMENT

1. Connect the vehicle to a compressed air supply with approximately the pressure of the normal supply system.
2. Ensure the inflation of the air springs.

3. Measure the ride height by using this method:

    a. Measure from the underside of the trailer frame to the top of the axle as shown in figure 24 below

    b. Add half the diameter of the axle to the measurement

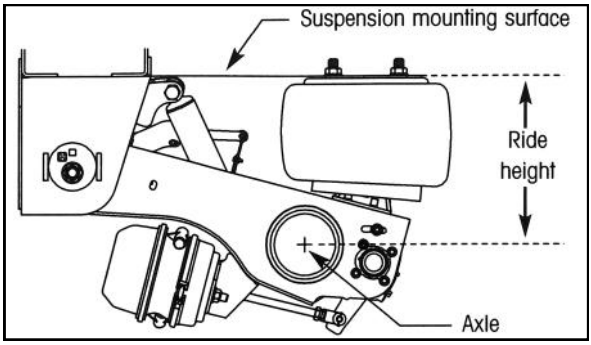

Figure 24. Measuring Ride Height

4. Raise or lower the trailer as necessary, so it is at the designed ride height.

5. Once the trailer is set to the correct designed ride height, set the HCV lever to the neutral (central) position.

Notice

When adjusting the height control valve, block the tires and release the trailer brakes. The axle must rotate freely to avoid a false reading.

Some height control valves have very small openings and a time delay of as much as 15 seconds. Allow sufficient time for the system to react to the adjustment. The response time will appear to be lengthy, but be patient.

6. Adjust the HCV linkage to fit between HCV lever and lower linkage attachment.

7. Once set to the designed ride height, test drive the trailer. After the test drive, check the ride height to assure an accurate adjustment.

Trailer Suspension System

Components and General Maintenance Guidelines

AIR SPRINGS - Air springs will last almost indefinitely in most applications. However air springs will fail quickly when rubbed, scuffed, or punctured. If an air spring fails, the trailer will settle on the internal rubber bumpers, so you can proceed to the nearest service facility at a lower speed. You should try to determine the cause of a failure, so you can avoid a costly repeat of the problem.

Air Spring Replacement

To replace an air spring, follow these steps:

1. Exhaust all air from the suspension system.
2. Raise and support the vehicle in a safe manner.
3. Unbolt the air spring.
4. Disconnect air-supply lines.
5. Replace the air spring.
6. Bolt the air spring in place.
7. Connect the air-supply lines.
8. Lower the trailer to the ground.
9. Supply air to the suspension system.

SHOCK ABSORBER - Shock absorbers absorb energy to prevent suspension oscillation. Shock absorbers are also rebound stops in most air suspensions. The shock absorber limits the stroke of an air spring, which prevents the air spring from being pulled apart.

To remove a shock absorber, follow these steps:

1. Remove the end fasteners.
2. Insert the new shock absorber.
3. Secure with correct size locknut and bolts.
4. Torque fasteners to specification.

Trailer Suspension System

Components and General Maintenance Guidelines

PIVOT CONNECTION - A correct pivot connection is crucial to the life of the suspension. The pivot fastener must continually provide a sufficient clamp load through the bushing to prevent premature suspension failure. Hendrickson INTRAAX suspension systems come equipped with QUIK-ALIGN pivot connection hardware. The hardware consists of a specially plated shear bolt to ensure a proper clamp load, (550 ft-lbs, H-45 torque).

NOTICE

Failure to properly torque the pivot bolts may result in loss of warranty coverage.

TRI-FUNCTIONAL BUSHING - have unique properties that will provide years of maintenance-free service. The TRI-FUNCTIONAL BUSHING (located at the suspension pivot connection) provides a resilient connection that allows an axle to walk without excessive flexing. The TRI-FUNCTIONAL BUSHING, in conjunction with the rigid axle connection, results in a roll-stable suspension design that resists trailer lean independent of the air spring loading. Reference Hendrickson service guide L427 for bushing replacement procedures.

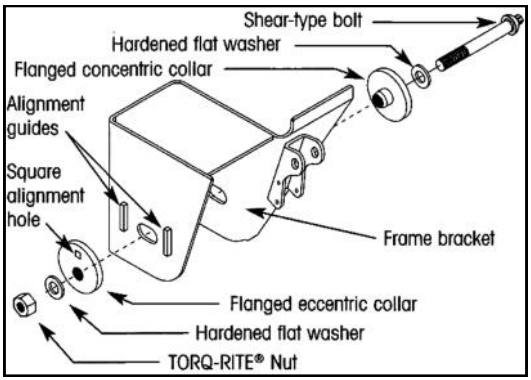

Figure 25. Pivot Connection Assembly

TORQUE SPECIFICATIONS

RECOMMENDED SUSPENSION TORQUE

COMPONENT DESCRIPTION	FT-LBS	N•m
QUIK-ALIGN Pivot Connection	505 to 595	685 to 807
Welded Pivot Connection (1 1/8 inches)	750 to 825	1017 to 1119
U-Bolts (HT Series)	475 to 525	644 to 712
Shock Bolts	210 to 235	285 to 319
Upper Air Spring Nuts	80 to 100	108 to 136
Lower Air Spring Nuts (HT Series)	40 to 50	54 to 68
Lower Air Spring Nuts (INTRAAX)	25 to 35	34 to 47
Brake Chamber Mounting Nut (INTRAAX)	100 to 110	136 to 149
S-Cam Support Bearing Mounting Nut (INTRAAX)	35 to 45	47 to 61

COMPONENT DESCRIPTION	IN-LBS	N•m
ABS Bracket Bolt and Nut (INTRAAX)	75 to 100	8 to 11
Dust Shield, Bolt-to-Spider (INTRAAX)	160 to 180	18 to 20
Dust Shield, Clamp-on (INTRAAX)	95 to 170	11 to 19

RECOMMENDED WHEEL TORQUES

Mount Type	Nut Thread	Torque Level Ft-Lb Lubricated*	Torque Level Ft-Lb Dry*
Hub piloted using two-piece flange nut	11/16" - 16 7/8 - 14 M20 x 1.5 M22 x 1.5	300-400 350-400 280-330 450-500	
Stud piloted, double cap nut standard type (7/8" radius)	3/4" - 16 1-1/8" - 16		450-500 450-500
Stud piloted, double cap nut heavy duty type (1-3/16" radius)	15/16" - 12 1-1/8" - 16 1-5/16" - 12		750-900 750-900 750-900

REPORTING SAFETY DEFECTS

If you believe that your vehicle has a defect which could cause a crash or could cause injury or death, you should immediately inform the National Highway Traffic Safety Administration (NHTSA) in addition to notifying Heil Trailer International.

If NHTSA receives similar complaints, it may open an investigation, and if it finds that a safety defect exists in a group of vehicles, it may order a recall and remedy campaign. However, NHTSA cannot become involved in individual problems between you, your dealer or Heil Trailer International.

To contact NHTSA, you may either call the Auto Safety Hotline toll-free at Monday-Friday 8am to 8pm at (888) 327-4236 , TTY: (800) 424-9153, or file and online form at www.nhtsa.gov. You can also obtain other information about motor vehicle safety from the Hotline.

Use only Genuine Heil parts. For trailer parts and technical information, please contact.

Heil Tank Service at 800-428-7101

Heil Part Number

9544-0015