Bulletin No.: 16-NA-384

Date: Nov-2016

Service Bulletin

INFORMATION

Subject: **Information on Reprogramming the Engine Control Module (ECM)**

Brand:	Model:	Model Year:		VIN:		Engine:	Transmission:
		from	to	from	to		
Chevrolet	Bolt EV	2017	2017				

Involved Region or Country	North America, South Korea
Condition	The Technician may be unable to reprogram the Engine Control Module (ECM).
Cause	This condition may be caused by the ECM automatically resetting during the flash event.

Correction

Important: Verify the battery voltage is more than 12.6 volts but less than 15.5 volts before proceeding with reprogramming. The battery must be fully charged **BEFORE** reprogramming.

When reprogramming the ECM (K20 Module), it is necessary to disconnect the X2 Connector from the ECM (K20 module) before the flash begins. Failure to disconnect the X2 connector will cause the ECM to re-set during the procedure and the re-flash will fail.

Service Procedure

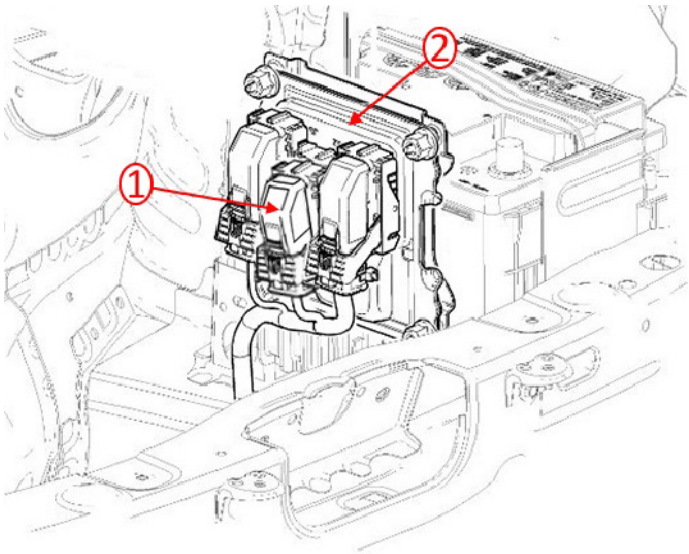

1. Disconnect the X2 connector (1) from the ECM (2).

2. Reprogram the controller.
3. Connect the X2 connector to ECM.
4. Clear all codes.

Important: During reprogramming, the battery voltage must be maintained within the proper range of 12.6-15.5 volts.**CONNECT** the approved Midtronics® PSC 550 Battery Maintainer (SPS Programming Support Tool (EL-49642) to the vehicle or the GR8 (EL50313) in the power supply mode.

Warranty Information

Labor Operation	Description	Labor Time
2810075	Engine Control Module Reprogramming with SPS	0.3 hr

Version	1
Modified	

GM bulletins are intended for use by professional technicians, NOT a "do-it-yourselfer". They are written to inform these technicians of conditions that may occur on some vehicles, or to provide information that could assist in the proper service of a vehicle. Properly trained technicians have the equipment, tools, safety instructions, and know-how to do a job properly and safely. If a condition is described, DO NOT assume that the bulletin applies to your vehicle, or that your vehicle will have that condition. See your GM dealer for information on whether your vehicle may benefit from the information.

WE SUPPORT VOLUNTARY TECHNICIAN CERTIFICATION