Bulletin No.: 16-NA-337 v2

Date: Nov-2016

Service Bulletin

INFORMATION

Subject: 2016-2017 Chevrolet Low Cab Forward Medium Duty Trucks — New Model Features

Attention: There is a requirement to retain all Warranty Parts from the new Low Cab Forward Trucks. The Warranty Parts Center will be requesting all Warranty Parts submitted on paid Warranty Transactions to be returned. Dealer Management should ensure their parts retention, tagging, storage and return procedures are compliant and that all Parts Personnel, Service Managers and Service Technicians are aware of this requirement for these vehicles.

Brand:	Model:	Model Year:		VIN:		Engine:	Transmission:
		from	to	from	to		
Chevrolet	Low Cab Forward 3500	2016	2016	All	All	8 CYL, V8, 6.0L, SFI, E85 MAX, IRON, GASOLINE ENGINE — RPO L96 8 CYL, V8, 6.0L, SFI, GEN 1, LPG/CNG ENGINE — RPO LC8	HYDRA-MATIC™ 6L90, 6-SPEED AUTOMATIC TRANSMISSION — RPO MYD
	Low Cab Forward 4500	2016	2016			8 CYL, V8, 6.0L, SFI, E85 MAX, IRON, GASOLINE ENGINE — RPO L96 8 CYL, V8, 6.0L, SFI, GEN 1, LPG/CNG ENGINE — RPO LC8	HYDRA-MATIC™ 6L90, 6-SPEED AUTOMATIC TRANSMISSION — RPO MYD
	Low Cab Forward 3500HD	2016	2016			4 CYL, L4, 3.0L, 4JJ1-TURBOCHARGED, 150HP, DIESEL ENGINE — RPO IZ3	AISIN A460, 6-SPEED AUTOMATIC TRANSMISSION, HMD, — RPO IX0

	Low Cab Forward 4500HD	2017	2017			4 CYL, L4, 5.2L, 4HK1-TURBOCHARGED, 215HP, DIESEL ENGINE — RPO I1B	AISIN A465, 6-SPEED AUTOMATIC TRANSMISSION, HMD, — RPO IR7
	Low Cab Forward 4500XD	2017	2017			4 CYL, L4, 5.2L, 4HK1-TURBOCHARGED, 215HP, DIESEL ENGINE — RPO I1B	AISIN A465, 6-SPEED AUTOMATIC TRANSMISSION, HMD, — RPO IR7
	Low Cab Forward 5500HD	2017	2017			4 CYL, L4, 5.2L, 4HK1-TURBOCHARGED, 215HP, DIESEL ENGINE — RPO I1B	AISIN A465, 6-SPEED AUTOMATIC TRANSMISSION, HMD, — RPO IR7
	Low Cab Forward 5500XD	2017	2017			4 CYL, L4, 5.2L, 4HK1-TURBOCHARGED, 215HP, DIESEL ENGINE — RPO I1B	AISIN A465, 6-SPEED AUTOMATIC TRANSMISSION, HMD, — RPO IR7

Involved Country	**United States**

Overview

Regular cab models are shown with upfits from an independent supplier. Crew cab is shown prior to an upfit.

Bulletin Purpose

This is a special bulletin to introduce the 2016-2017 Chevrolet Low Cab Forward medium-duty trucks. The purpose of this bulletin is to help the Service Department Personnel become familiar with some of the vehicle's new features and to describe some of the action they will need to take to service this vehicle.

Introduction

The all-new Chevrolet Low Cab Forward medium-duty trucks are the newest vehicle offerings in Chevrolet's ever-expanding portfolio of commercial vehicles. The trucks will be offered in regular cab and crew cab body styles. Depending on the model, they will be equipped with either a General Motors 8 cylinder, V8, 6.0L, gasoline engine and Hydra-Matic™ 6-Speed automatic transmission, a General Motors 8 cylinder, V8, 6.0L, LPG/CNG capable engine and Hydra-Matic™ 6-Speed automatic transmission, or the Isuzu 3.0L or 5.2L turbocharged diesel engines with an Aisin 6-speed automatic transmission. The Aisin transmissions are power take-off (PTO) capable. The seven new Low Cab Forward models are the 3500, 3500HD, 4500, 4500HD, 4500XD, 5500HD and 5500XD and will be distributed through select Chevrolet dealers who are intensely focused on the commercial business.

Additional features include:

- Compatibility for a variety of body types, including dry freight boxes, refrigerated boxes, stake/flat beds and service bodies.
- Easy access engine compartment with 45-degree tilting cab.
- Easy driver entry and exit.
- Excellent visibility and maneuverability, especially in urban environments.
- GVW Ratings ranging from 12,000 to 19,500 lbs (5443 to 8845 kg).
- Standard exhaust brake on diesel equipped vehicles.
- Variety of Port Installed Options (PIOs) (OE) are available depending on the model, such as but not limited to: air deflector, Bluetooth® radio, dual fuel tank, engine block heater, keyless entry and vertical exhaust.
- Wheelbases ranging from 109 to 212 inches (2.77 to 5.38 m).

Cab Over Design

The Cab Over design provides optimal visibility for the driver, which is especially useful in tight urban areas. The cabin's design is also helpful for crews that make multiple pick-ups and deliveries throughout the day due to its ease of entry and exit. Easy access to the engine compartment makes routine maintenance a breeze.

Overall Length

The overall length of the LCF trucks allows for generous cargo space, making it ideal for delivering large or bulky cargo such as furniture, construction materials, frozen foods, landscaping materials, or even heavy machinery. Its impressive turning radius gives a driver the agility needed to navigate in the city.

Interior Workspace

The interior design maximizes the use of space to benefit drivers with fold-down trays that double as a laptop/work area and has convenient storage areas in the dash, doors, seatback pockets, overhead shelf, and rear organizer tray. There is room behind the driver seat that folds down for a fire extinguisher or tool box.

Gasoline Powered 3500 and 4500 — Configurations

These trucks are equipped with a Vortec V8, 6.0L engine, mated with a Hydra–Matic™ 6L90, 6-speed automatic transmission with double overdrive and lock-up clutch that delivers 297 hp (221 kw) @ 4,300 RPM and 372 lb-ft (504 Nm) @ 4,000 RPM of torque for effortless towing and hauling. Available in Regular Cab and Crew Cab configurations.

Diesel Powered 3500HD — Configuration

This truck is equipped with an Isuzu 3.0L, I-4, 4JJ1 - turbocharged engine, mated with an Aisin A460, 6-speed automatic transmission with double overdrive and lock-up 2nd-6th gears that delivers 150 hp (112 kw) @ 2,800 RPM and 282 lb-ft (382 Nm) @ 1,600–2,800 RPM of torque. Available in Regular Cab configuration.

Diesel Powered 4500HD and 4500XD — Configurations

These trucks are equipped with an Isuzu 5.2L, I-4, 4HK1 - turbocharged engine, mated with an Aisin A465, 6-speed automatic transmission with double overdrive and lock-up 2nd-6th gears that delivers 215 hp (160 kw) @ 2,500 RPM and 452 lb-ft (613 Nm) @ 1,850 RPM of torque. Available in Regular Cab and Crew Cab configurations.

Diesel Powered 5500HD and 5500XD — Configurations

These trucks are equipped with an Isuzu 5.2L, I-4, 4HK1 - turbocharged engine, mated with an Aisin A465, 6-speed automatic transmission with double overdrive and lock-up 2nd-6th gears that delivers 215 hp (160 kw) @ 2,500 RPM and 452 lb-ft (613 Nm) @ 1,850 RPM of torque. The 5500HD is available in Regular Cab and Crew Cab configurations. The 5500XD is available in Regular Cab configuration.

Engine — V8 6.0L Gasoline — RPO L96

Vortec V8 6.0L Gasoline Engine — RPO L96

Shown is a typical view of the V8 6.0L gasoline engine — RPO L96.

The Vortec V8, 6.0L, is a heavy duty gasoline engine. Variable valve timing (VVT) helps the engine optimize performance, efficiency and reduce emissions. The intake air flow has been improved over previous engine versions by straightening out and optimizing the flow path from the intake manifold into the cylinder heads, while the exhaust ports are also designed for greater air flow.

Engine Components Description and Operation

- **Cylinder Block and Rotating Assembly:** The deep-skirt design of the cylinder block helps maximize strength and minimize vibration. The bulkheads accommodate six-bolt, cross-bolted main-bearing caps that limit crank flex and stiffen the engine's structure. A structural oil pan further stiffens the powertrain. Along with the rigid block, the engine's rotating assembly was designed for optimal strength and duration complemented by features designed to make the L96 quiet and smooth. The engine features a heavy duty timing chain developed expressly for quiet operation. The timing chain connects the camshaft and crankshaft and is validated for 200,000 miles (321,869 km) of operation and fitted with a leaf-spring-type dampener.
- **Cylinder Heads:** The high-flow cylinder heads feature cathedral shaped intake ports that promote exceptional airflow and also support greater airflow at high rpm, for a broader horsepower band, along with strong, low-rpm torque. The D-shaped exhaust ports are also designed for excellent high rpm airflow.
- **Camshaft Phasing:** The 6.0L features variable valve timing, maximizing engine performance for given demands and conditions. At idle for example, the cam is at the full advanced position allowing exceptionally smooth idling. Under other conditions the phaser adjusts to deliver optimal valve timing for performance, driveability and fuel economy. At high rpm's it may retard timing to maximize airflow through the engine and increase horsepower. At low rpm's it can advance timing to increase torque. Under light loads, it can retard timing at all engine speeds to improve fuel economy.
- **Electronic Throttle Control:** With electronic throttle control (ETC), there is no mechanical link between the accelerator pedal and the throttle body. A sensor at the pedal measures pedal angle and sends a signal to the engine control module (ECM), which in turn directs an electric motor to open the throttle at the appropriate rate and angle. The ETC system can deliver outstanding throttle response and greater reliability than a mechanical connection

- **Exhaust Manifolds:** The exhaust manifolds were developed to improve durability and sealing and reduce operational noise. Cast nodular iron was the material of choice for its basic durability and excellent heat management properties. The manifolds are fitted with new triple-layer heat shields fabricated from stainless steel and insulating material. The shields limit heat transfer from the engine to the engine bay, allowing the engine to reach optimal operating temperature more quickly.
- **Ignition System:** The engine has an advanced 58X crankshaft position encoder to ensure that ignition timing is accurate throughout its operating range. The 58X crankshaft ring and sensor provide more immediate, accurate information on the crankshaft's position during rotation. This allows the ECM to adjust ignition timing with greater precision optimizing performance and economy. Engine starting is also more consistent in all operating conditions.

Engine — V8 6.0L LPG/CNG — RPO LC8

Shown is a typical view of the V8 6.0L LPG/CNG engine — RPO LC8.

Overview

The Vortec V8 6.0L — RPO LC8 is a dedicated LPG (liquid petroleum gas) and/or CNG (compressed natural gas) version of the V8 6.0L — RPO L96 engine. The 6.0L's balance of performance and efficiency is great airflow throughout. Intake airflow was improved over previous engines by straightening out and optimizing the flow path from the intake manifold into the cylinder heads, while the exhaust ports are also designed for greater flow. The engine's efficiency also optimizes emissions performance. The 6.0L is powerful, but delivers exceptional refinement and great strength. Quiet features built into the engine are complemented by an improved engine cradle and mounting system.

- **Cylinder Block and Rotating Assembly:** The engine block was developed with math-based tools and data acquired in GM's racing programs, and provides a light, rigid foundation for an impressively smooth running engine. Its deep-skirt design helps maximize strength and minimize vibration. The bulkheads accommodate six-bolt, cross-bolted main-bearing caps that limit crank flex and stiffen the engine's structure. A structural oil pan further stiffens the powertrain. Along with the rigid block, the engine's rotating assembly was designed for optimal strength and durability. The engine features a heavy-duty timing chain developed expressly for quiet operation which is fitted with a leaf-spring-type dampener and is validated for 200,000miles (322,000 km) of operation.
- **High-Flow Cylinder Heads and Valvetrain:** The cylinder heads feature "cathedral" shaped intake ports that promote exceptional airflow. They are derived from the high-performance cylinder heads that were used on the "C5" Chevrolet Corvette Z06 and support great airflow at higher rpm for a broader horsepower band, along with strong, low-rpm torque. The intake ports that feed the combustion chambers, as well as the D-shaped exhaust ports, are also designed for excellent high-rpm airflow.
- **Electronic Throttle Control:** With Electronic Throttle Control (ETC), there is no mechanical link between the accelerator pedal and the throttle body. A sensor at the pedal measures pedal angle and sends a signal to the ECM, which in turn directs an electric motor to open the throttle at the appropriate

rate and angle. The ETC system can deliver outstanding throttle response and greater reliability than a mechanical connection.

- **Exhaust Manifolds:** The exhaust manifolds were developed to improve durability, sealing and reduce operational noise. Cast nodular iron was the material of choice for its basic durability and excellent heat-management properties. The manifolds are fitted with new triple-layer heat shields fabricated from stainless steel and insulating material. The shields limit heat transfer from the engine to the engine bay, allowing the engine to reach optimal operating temperature quicker, yet reducing heat in the engine compartment once that temperature is achieved.
- **Hardened Exhaust Valves and Intake/Exhaust Valve Seats:** The engine is equipped with factory-installed hardened exhaust valves and intake/exhaust valve seats. These components are engineered to GM durability standards for gaseous fuel use.
- **58X Ignition System:** The advanced 58X crankshaft position encoder ensures that ignition timing is accurate throughout its operating range. The new 58X crankshaft ring and sensor provide more immediate, accurate information on the crankshaft's position during rotation. This allows the ECM to adjust ignition timing with greater precision, which optimizes performance and economy. Engine starting is also more consistent in all operating conditions.

Engine Oil — V8 6.0L Gasoline/LPG/CNG — dexos®

Engine oil is an important factor determining engine performance and longevity. The engine oil level must be checked regularly and the oil should be changed regularly according to the Maintenance Schedule.

Ask for and use engine oils that meet the dexos® specification. Engine oils that have been approved by GM as meeting the dexos® specification are marked with either of the dexos1® approved logos that are shown. For additional information, visit this General Motors website: **http://www.gmdexos.com**

Viscosity Grade

Use only the specified dexos® oil and oil filters. Use ACDelco dexos1® synthetic blend SAE 5W-30 viscosity grade engine oil. In an area of extreme cold, where the temperature falls below −20°F (−29°C) use SAE 0W-30 engine oil. An oil of this viscosity grade will provide easier cold starting for the engine at extremely cold temperatures.

Checking Engine Oil Level Regular Cab

The engine oil dipstick is on the left side of the engine after tilting the cab.

1. Tilt the cab.
2. Remove the oil dipstick and wipe off any oil on the oil dipstick.
3. Insert the oil dipstick fully and remove it.
4. If the oil is below the cross-hatched area at the tip of the dipstick, remove the engine oil fill cap and add 1 qt (1 L) of dexos1® oil and then recheck the level.
5. Install the engine oil fill cap.
6. Insert the oil dipstick.

Checking Engine Oil Level Crew Cab

The engine oil dipstick is under the engine inspection sub cover which is located underneath the passenger seat.

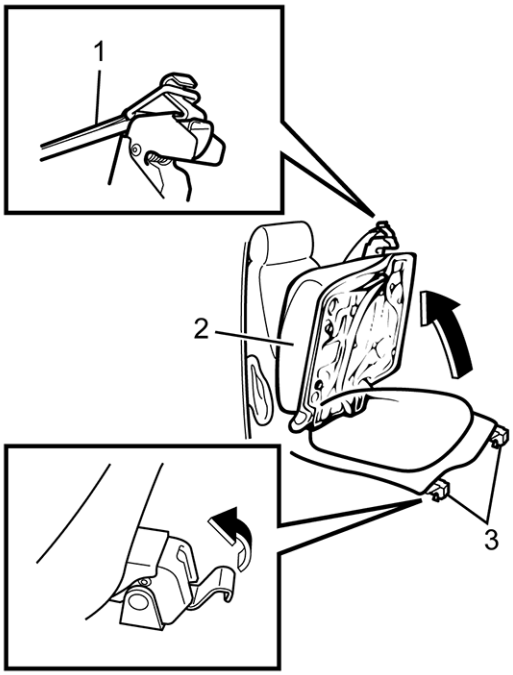

1. Use the strap (1) to raise the passenger seat cushion (2).
2. Release the engine inspection sub cover catch hooks (3) and raise it.
3. Remove the oil dipstick, wipe off any oil on the dipstick.
4. Insert the oil dipstick fully and remove it.
5. If the oil is below the cross-hatched area at the tip of the dipstick, remove the engine oil fill cap and add 1 qt (1 L) of dexos1® oil, then recheck the oil level.
6. Install the engine oil fill cap.
7. Insert the oil dipstick.

Engine — 3.0L I4 4JJ1-TC Diesel

Isuzu 3.0L I4 4JJ1-TC Diesel Engine

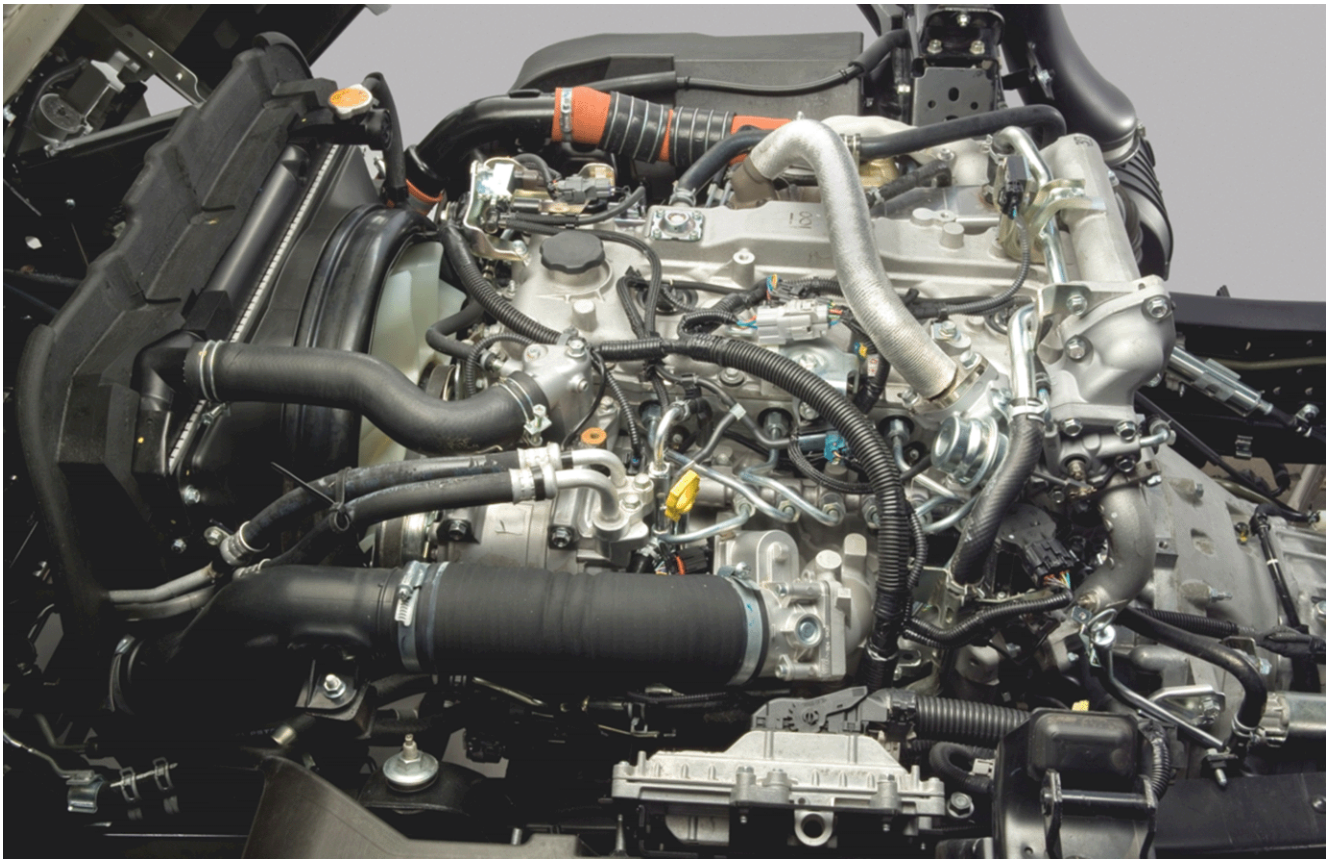

Shown is a typical view of the engine.

This engine has the following features for increased performance and emissions reduction.

- **B20 Biodiesel Capable:** Biodiesel can be blended and used in many different concentrations. B20 is a blend between 6% to 20% biodiesel blended with petroleum diesel. B20 is popular in the United States because it represents a good balance of cost, emissions, cold-weather performance, materials compatibility, and ability to act as a solvent.

  A listing of certified marketers can be found at **www.bq-9000.org**
- **Bore x Stroke:** 3.76 x 4.13 in (95.4 x 104.9 mm)
- **Combustion Chamber Type:** Direct injection.
- **Compression Ratio:** 17.5
- **Cylinder Bore:** Liner-less cylinder bore.
- **Cylinder Head:** Aluminum alloy cylinder head with cast-in injector bores.
- **Displacement:** 3.0 L, 183 ci (2,999 cc).
- **Dual Overhead Camshafts:** Dual overhead camshafts (DOHC) with 4 valves per cylinder for increased airflow.
- **Exhaust Brake:** The exhaust brake is a means of slowing a diesel engine by closing off the exhaust path from the engine, causing the exhaust gases to be compressed in the exhaust manifold, and in the cylinder. Since the exhaust is being compressed, and there is no fuel being applied, the engine works backwards, slowing down the vehicle. The amount of negative torque generated is usually directly proportional to the back pressure of the engine.
- **EGR:** Primary components are the EGR Valve, EGR Cooler Bypass Actuator, EGR Cooler Bypass Solenoid Valve and various sensors.
- **Fuel System Overview:**

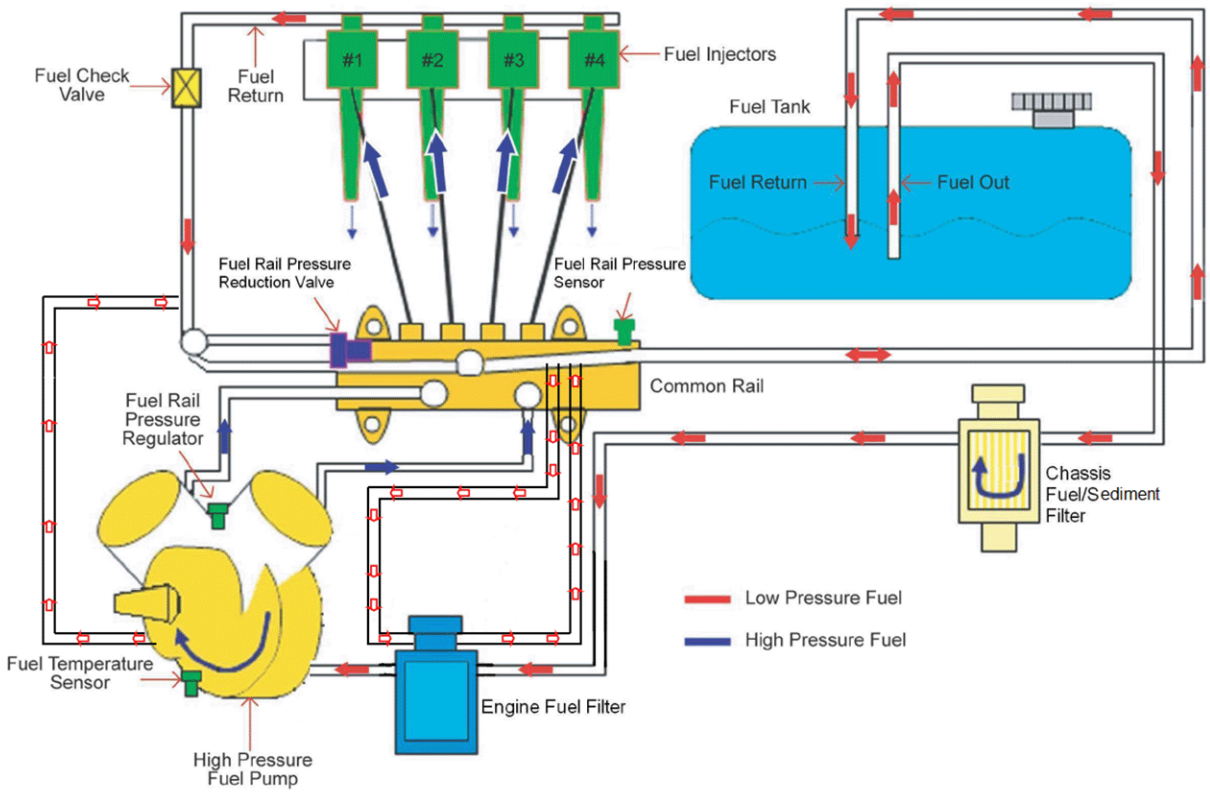

Fuel System Diagram

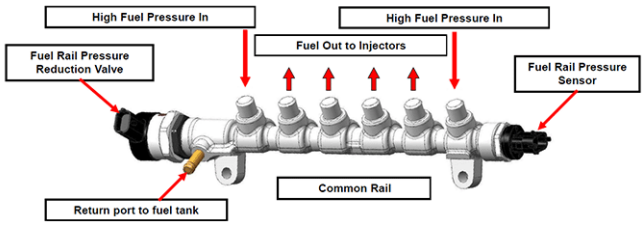

Common Rail Diagram

- **Common Rail:** The engine uses a Bosch High Pressure Common Rail fuel system. Fuel is supplied to the Common Rail through two high pressure fuel lines from the High Pressure Fuel Supply Pump. The ECM monitors fuel pressure in the Common Rail using the Fuel Rail Pressure (FRP) Sensor mounted on the rail. In case of a rail overpressure event, a Fuel Rail Pressure Reduction Valve (FRPRV) mounted on the rail will open to release the overpressure and return fuel back to the fuel tank. A Fuel Check Valve (FCV) in the return line is used to prevent high pressure fuel from the rail to backflow into the injector return line when the FRPRV is commanded OPEN. Without a FCV, high pressure fuel when released would blow the injector return lines OFF, causing a fuel leak.

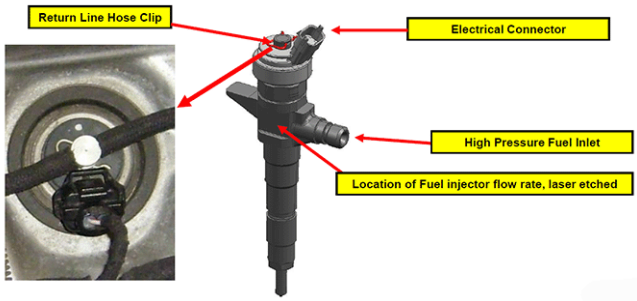

- **Fuel Injector:** The ECM regulates the fuel injector injection timing and fuel quantity depending on conditions provided by various sensor

signals. The injector has an 8 hole nozzle, and the ECM adjusts the injection timing and amount using the opening and closing of a solenoid valve a the top of the fuel injector. The electrical connector and fuel return lines can be accessed above the valve cover. The fuel injector fuel flow rate is laser etched on the base of the fuel injector. Use a scan tool to read or write the injector fuel flow rate values, that must be stored in the ECM.

- **Fuel Injection Order:** 1-3-4-2
- **Fuel Pressure Regulator Solenoid:** The ECM regulates the fuel system pressure using the Fuel Pressure Regulator (FPR) Solenoid. The ECM pulses the FPR Solenoid based on the actual fuel system pressure provided by the Fuel Pressure Sensor signal and ECM calculated engine load. The FPR Solenoid is located on the top of the High Pressure Fuel Pump. This is a non-serviceable part. Replacement of this part requires replacement of the High Pressure Fuel Pump assembly.
- **Fuel Rail Pressure Sensor:** The FRP Sensor is a transducer mounted on the Common Rail. The FRP Sensor is used to monitor pressure in the Common Rail. The FRP Sensor voltage varies according to changes in the fuel pressure in the Common Rail. The FRP Sensor has 3 circuits, a 5 volt reference, signal circuit, and ground. The FPR Sensor provides a signal to the ECM on the signal circuit relative to the fuel pressure changes in the Common Rail.
- **Chassis Mounted Fuel/Water Separator Filter:** Cartridge paper element with water separator.

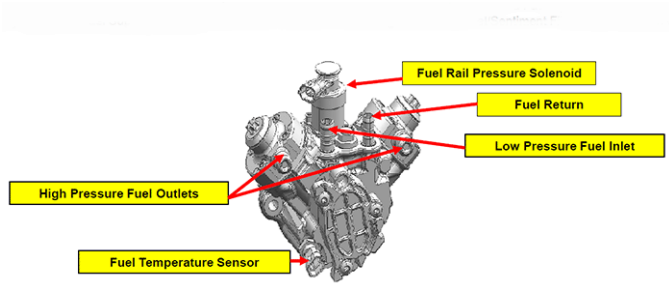

- **High Pressure Fuel Pump:** The High Pressure Fuel Pump incorporates two high pressure fuel outlet ports to supply the Common Rail, a low pressure suction side, and a fuel return port. The two high pressure fuel outlet ports supply fuel to the Common Rail for the fuel injectors. The fuel pressure for both ports is regulated by the ECM using a an FRP Solenoid which is an integral part of the High Pressure Fuel Pump. The suction side of the pump draws fuel from the fuel tank, through the chassis mounted fuel/water separator and sediment filter and then the main engine fuel filter. The High Pressure Fuel Pump also has a return port. Fuel temperature is monitored by a Fuel Temperature Sensor (FTP) located at the bottom portion of the High Pressure Fuel Pump. The High Pressure Fuel Pump is gear driven by the crankshaft.
- **Main Engine Fuel Filter:** Five micron main engine fuel filter.

- **Heated Oxygen Sensor:** The Heated Oxygen Sensor (HO2S) measures the amount of oxygen in the exhaust stream. It is similar to the sensors found in gasoline engines. The sensor consists of an oxygen sensing cell, an oxygen current pumping cell, and a heater. The exhaust gas sample passes through a diffusion gap between the sensing cell and the pumping cell. The ECM supplies a signal voltage to the HO2S and uses this voltage as a reference to the amount of oxygen in the exhaust system. An electronic circuit within the ECM controls the pump current through the oxygen pumping cell in order to maintain a constant signal voltage. This sensor eliminates the lean-rich cycling inherent in narrow-band sensors used in the gasoline engines.
- **Horsepower:** 150 hp (112 kw) @ 2,800 RPM **TORQUE:** 282 lb-ft (382 Nm) @ 1,600–2,800 RPM
- **Interference Engine:** An interference engine is a type of 4-stroke internal combustion piston engine in which one or more valves in the fully open position extends into any area that the piston may travel into. Interference engines rely on timing gears, chains, or belts to prevent the piston from striking the valves by ensuring that the valves are closed when the piston is near top dead center.
- **Piston:** Aluminum alloy, thermal flow piston with graphite coating on the skirt surface.
- **Preheating System:** Diesel engines are compression ignited, making them difficult to start when cold. A preheating system is used to warm the compressed air inside the combustion chambers using glow plugs to facilitate engine starting. Start the engine after the Wait-to-Start light has turned OFF.
- **Timing Components:** Front engine mounted timing components for ease of servicing.
- **Turbocharger Overview:**

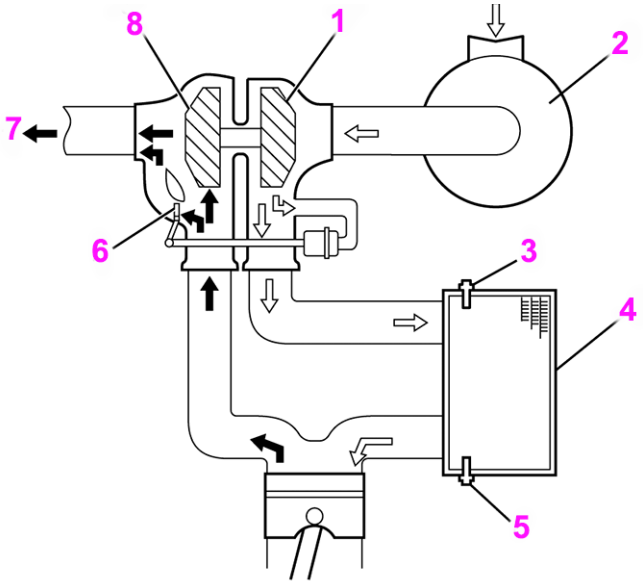

Turbocharger System Diagram

1) Compressor Wheel

2) Air Cleaner Assembly

3) Charge Air Cooler (CAC) Temperature Sensor 1

4) Charge Air Cooler

5) CAC Temperature Sensor 2

6) Waste Gate Valve

7) Exhaust Gas

8) Turbine Wheel

– **Turbocharger:** This engine is equipped with a Variable Nozzle Turbocharger (VNT). The VNT design allows the effective aspect ratio (A:R) of the TC to be altered as conditions change. The exhaust flow through the turbine wheel is controlled by a row of vanes that move to match the exact boost requirements of the engine. At low engine speed, the variable nozzle turbine vanes close to restrict the exhaust air flow through the turbine, thereby increasing turbine power and boost pressure. At higher engine speeds, the moveable vanes open to maximize the exhaust gas flow, thereby avoiding turbo over-speed and maintaining the boost pressure required by the engine.

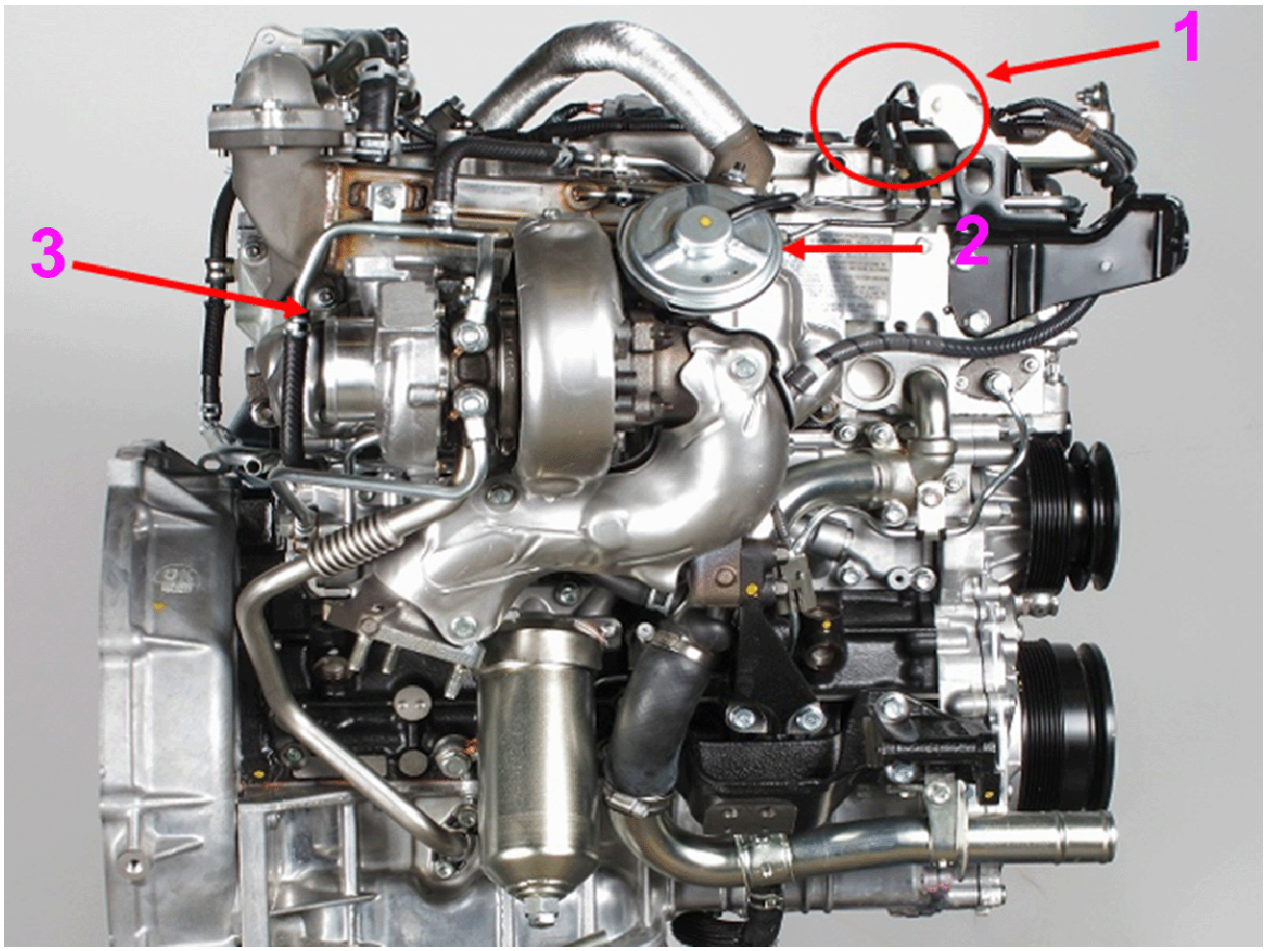

- **Boost Control Solenoid and Turbocharger Nozzle Control Actuator:** The ECM commands the position of the turbocharger nozzles by using the Boost Control Solenoid (1) vacuum supply to the Turbocharger Nozzles Control Actuator (2). The ECM does this by using a pulse width modulation signal on the boost control solenoid control circuit to open/close the boost control solenoid, thereby controlling the nozzle control actuatc vacuum supply as needed.

  When the engine is in a high load condition, the ECM commands the boost control solenoid to close the turbocharger nozzles ***(the vacuum supply to the turbocharger nozzles control actuator is increased),*** thus increasing the boost. When the engine is in a low load condition, the turbocharger nozzles are moved to the open direction ***(the vacuum supply to the turbocharger nozzles control actuator is reduced),*** thus decreasing the boost. The ECM will vary the Turbocharger (3) boost pressure target depending upon the requirements of engine power output.

- **Boost Pressure/Intake Air Temperature (IAT) Sensor 2:** The Boost Pressure/IAT Sensor 2 is located on top of the intake manifold, behind the throttle body. The sensor is a four wire combination transducer and variable resistor. The ECM provides a separate 5 volt ref and a shared ground circuit with separate signal lines. The Boost Pressure Sensor is a transducer that varies voltage according to changes in the air pressure inside the intake manifold. The Boost Pressure Sensor provides a signal to the ECM on the signal circuit, which is relative to the pressure changes in the air tubing. The ECM should detect low signal voltage at a low boost pressure, such as low engine load. The ECM should detect high signal voltage at a high boost pressure. The IAT Sensor 2 is internal to the Boost Pressure Sensor and is a variable resistor that measures the temperature of the air entering the engine that is mixed with EGR gas.
- **Charge Air Cooler:** The Charge Air Cooler (CAC) is an air-to-air heat exchange device used on this engine to improve its volumetric efficiency by increasing intake air-charge density through isochoric cooling.
- **Charge Air Cooler Sensors:** The ECM uses the Charge Air Cooler Sensors to monitor the flow of air in and out of the CAC. This is done by monitoring and then comparing the change in air temperature going into and exiting the CAC. The purpose is to look for a restricted or plugged CAC The ECM uses both sensor inputs for diagnosis only and a malfunction will not effect the driveability of the vehicle.

  CAC Temperature Sensor 1 is positioned in the CAC inlet from the Turbocharger.

  CAC Temperature Sensor 2 is positioned in the CAC outlet to the intake.

Engine Coolant — 3.0L I4 4JJ1-TC Diesel

The diesel engines use a long life coolant which is ***green*** in color. The addition of conventional green propylene glycol coolant will damage the engine. The factory installed long life green engine coolant will ***not*** be available from GM CCA.

It is recommended to only use ***yellow long life anti-freeze/coolant*** GM P/N 12378560 (AC Delco 10-5034) in the MD LCF diesel engines. This is the ***only***

product that has been certified as compatible with the original long life green diesel engine coolant.

Engine Oil — 3.0L I4 4JJ1-TC Diesel

Engine Oil

Engine oil is an important factor determining engine performance and longevity. Be sure to use only the specified oil and oil filters. The engine oil level must be checked and the oil should be changed regularly according to the Maintenance Schedule. When particulate matter (PM) has accumulated to a preset level in the diesel particulate filter (DPF), the filter is automatically regenerated through combustion. To make this regeneration possible, a small amount of fuel is injected into the engine combustion chamber after firing. This causes fuel to gradually become mixed with the engine oil, and the ***engine oil level may rise beyond the original level.*** This does not indicate a malfunction of the engine.

Low Ash Engine Oil

GM recommends using low ash oil engine oil, which supports the DPF. Using an engine oil that is not low ash will increase the particulate matter (PM) produced by engine combustion. Consequently, the maintenance interval of the DPF filter will be reduced.

Oil Identification Logo and Viscosity Grade

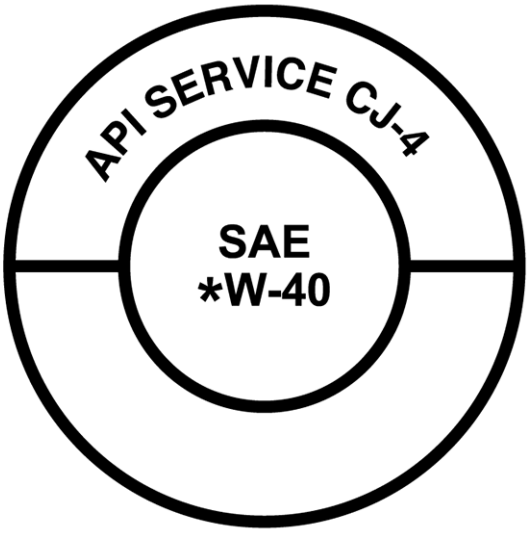

A logo (symbol) is used on most oil containers to help select the proper engine oil to use. The top portion of the logo shows the oil quality by API designation such as CJ-4 or others. The center portion of the logo shows the SAE viscosity grade, such as SAE *W-40 (* indicates viscosity on the low temperature side). Look for this logo on the oil container, and use only oil containing the logo and the viscosity grade SAE *W-40.

Checking the Engine Oil Level Using Switch

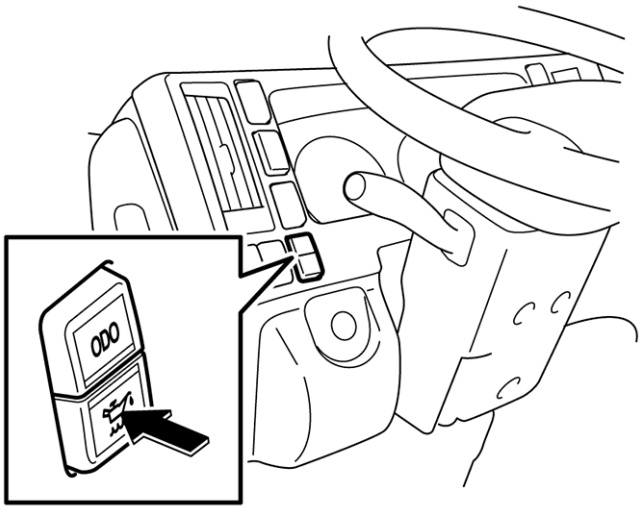

The oil level varies while the engine is running, right after it is stopped, and on sloping ground. When checking the oil level, be sure the vehicle is on level groun while the engine is cool. Press the engine oil level check switch on the dash. If the engine oil level is low, the red oil pressure warning light will turn ON. If the engine oil level is within the acceptable level, the green oil level indicator will turn ON.

Checking the Engine Oil Level Using the Dipstick

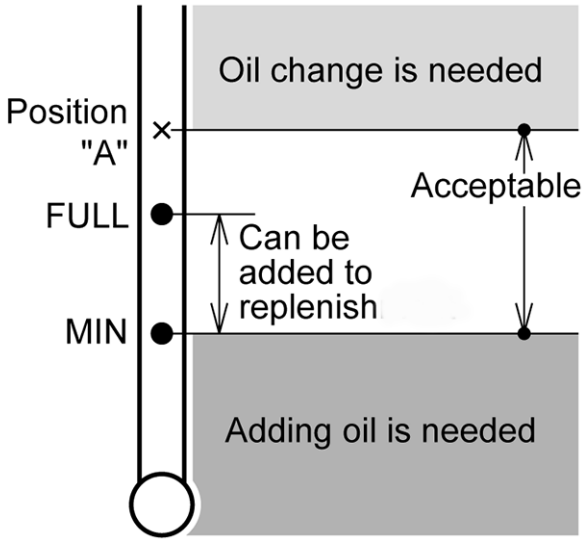

1. Remove the oil dipstick and wipe off any oil on the oil dipstick.
2. Reinsert the oil dipstick fully and then gently remove it. The oil is at an acceptable level if the oil level is between the Position “A" and MIN marks.
3. If the oil level is too low, add oil to the "FULL" mark.
4. If the oil level is beyond the Position “A" mark, the oil needs to be changed.
5. Reinstall the oil dipstick.

Engine — 5.2L I4 4HK1-TC Diesel

Isuzu 5.2L I4 Diesel Engine 4HK1-TC

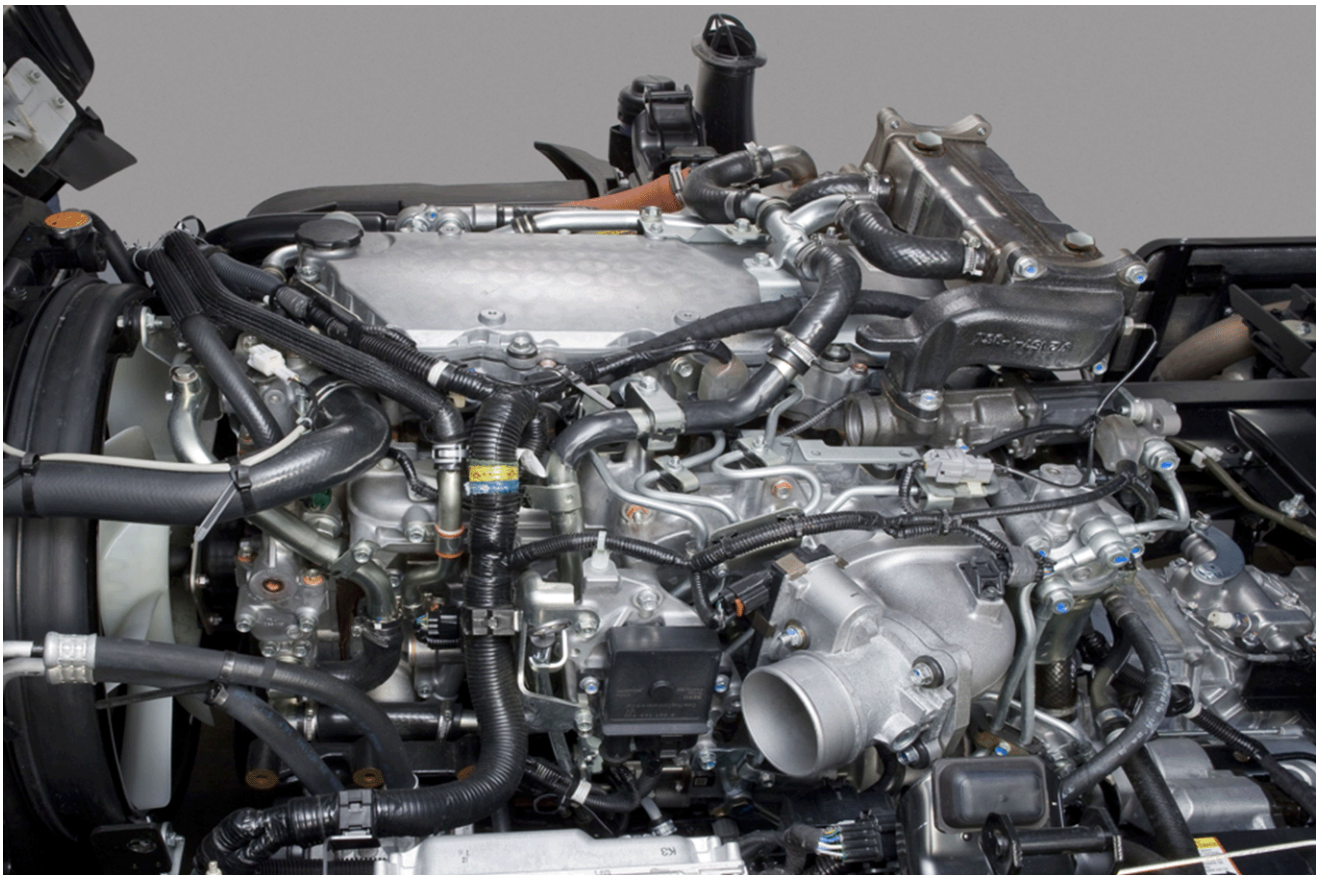

Shown is a typical view of the engine.

This engine has the following features for increased performance and emissions reduction.

- **Air Intake Throttle Valve:** The Air Intake Throttle Valve is used during stationary DPF Regeneration and during engine warm up.

- **B20 Biodiesel Capable:** Biodiesel can be blended and used in many different concentrations. It is acceptable to use diesel fuel containing up to 20% biodiesel (B20). B20 is a blend between 6% to 20% biodiesel blended with petroleum diesel. B20 is popular in the United States because it represents a good balance of cost, emissions, cold-weather performance, materials compatibility, and ability to act as a solvent.

  A listing of certified marketers can be found at **www.bq-9000.org**

- **Bore x Stroke:** 4.53 in (115 mm) x 4.92 in (125 mm)

- **Camshaft:** The overhead camshaft is directly above the cylinder which minimizes valve train losses by eliminating the push rods and other components. The camshaft followers are roller type for reduced friction losses. Valve timing events have been modified via revised camshaft lobe profiles for improved engine performance. The two intake and two exhaust valves are forged from heat resistant steel. The valve tappets are roller type for reduced friction and better performance.

- **Crankshaft:** The crankshaft is made from forged steel. It has 5 main bearings and is fully counterweighted. The crankshaft is retained by 27 bolts connecting the lower ladder structure crankcase to the engine block.

- **Cylinder Block:** The cylinder block is made of cast iron and is a parent bore design with five bearings. The cylinder walls are induction hardened for enhanced durability and long life. The cylinders can be over bored by 0.020 in (0.5 mm) and fitted with oversized pistons to facilitate rebuilding. The bearing cap has a ladder frame structure integrating with the crankcase to increase block rigidity for greater strength against mechanical loads and stresses. The cylinder block water passages are designed to improve coolant circulation and eliminate hot spots. The block has been strengthened and stiffened in several key areas to reduce stress and increase engine life.

- **Cylinder Head:** The cylinder head features 4 valves per cylinder and a direct injection fuel system. The cylinder head is made from a high strength cast iron material and is held in place by 20 high strength head bolts. The cylinder head casting is entirely new, with new water passages to improve coolant circulation and eliminate hot spots. Additional stiffening ribs have been added to the casting to increase head stiffness in order to improve head gasket retention and improve engine reliability. The intake and exhaust port geometry is entirely new and designed to improve air flow and combustion efficienc The cylinder head bolt engagement length has been increased to improve clamping force and engine stiffness, which increases reliability while reducing transmitted combustion noise.

- **Displacement:** 5.2 L (317 ci)

- **EGR System:** In order to reduce emissions of harmful Oxides of Nitrogen (NOx), engine utilizes cooled EGR. The EGR system features several improvements. New EGR coolers provide increased cooling capacity for improved emissions performance. The secondary EGR cooler is mounted across the top of the valve cover and now features two ports that allow air to be bled from the system and coolant to be added to the cooling system. This change will significantly improve serviceability and reduce the time required to bleed the cooling system. Additionally, the EGR valve motor has bee upgraded to brushless motor design, which will increase service life of the motor and valve.

- **Exhaust Brake:** The exhaust brake is a means of slowing a diesel engine by closing off the exhaust path from the engine, causing the exhaust gases to be compressed in the exhaust manifold, and in the cylinder. Since the exhaust is being compressed, and there is no fuel being applied, the engine works backwards, slowing down the vehicle. The amount of negative torque generated is usually directly proportional to the back pressure of the engine.

- **Fuel Injection Order:** 1-3-4-2

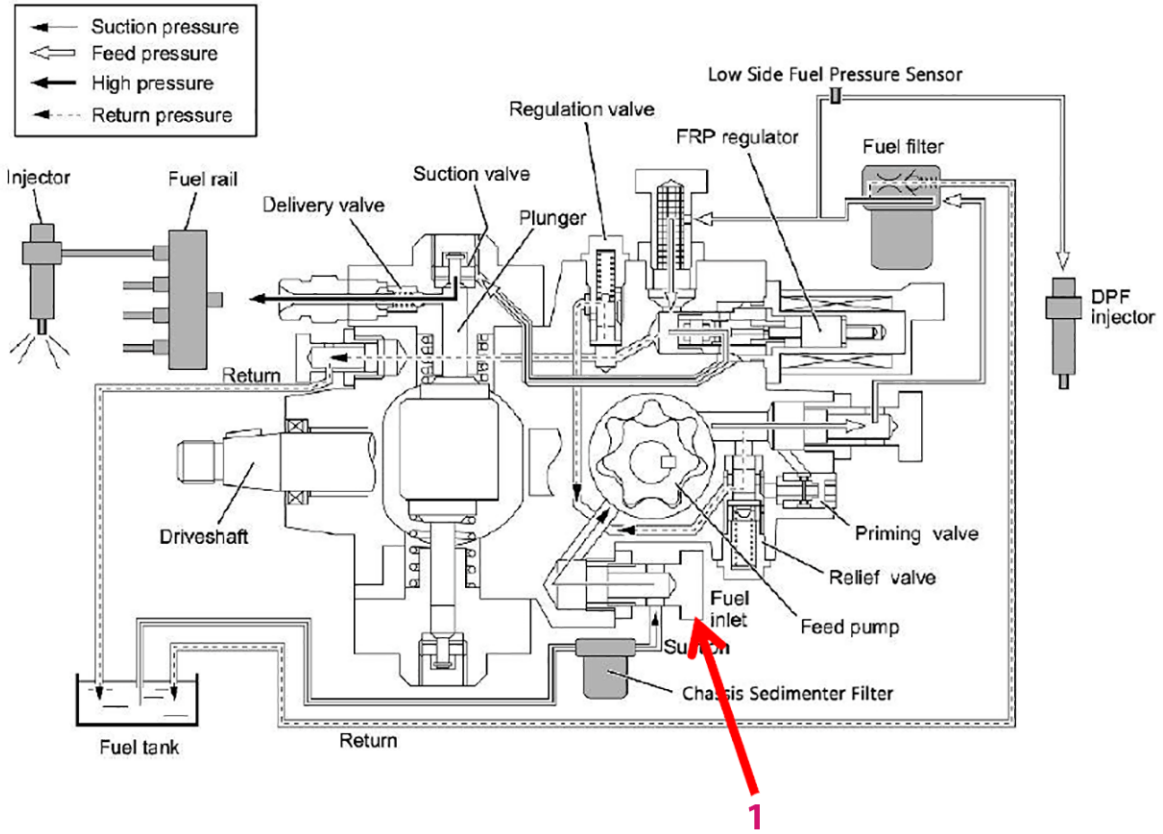

- **Fuel System Diagram:** Supply Pump Bolt with Filter Restriction (1).
- **Fuel Injection System:** The fuel injection system is a Denso® common rail type fuel system. Pressure is supplied by a high pressure pump to the common rail. Fuel is then distributed to the injectors which are controlled by the ECM. The injectors deliver the correct amount of fuel regardless of speed and altitude. The injection pressure has been increased from 23,200 psi (160 MPa) to 29,000 psi (200 MPa) to reduce emissions and improve fuel consumption. Combustion noise has also been significantly reduced.

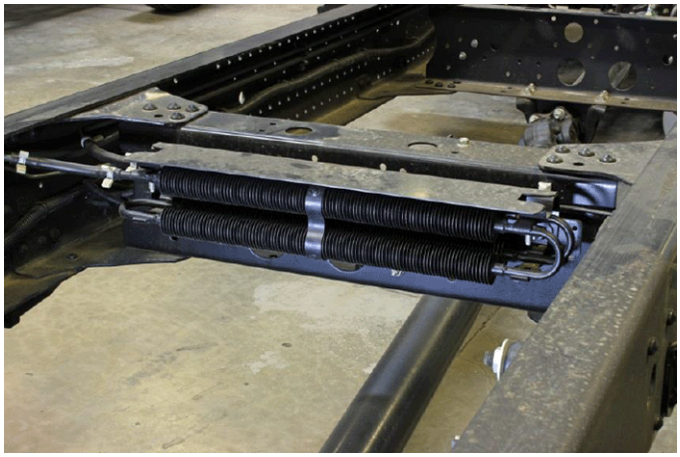

- **Fuel System Cooler:** Increased fuel pressure and increased cylinder pressure due to changes in the camshaft timing have resulted in higher fuel temperatures. To compensate for this, a Fuel System Cooler was added. This component cools the fuel prior to it returning to the fuel tank. The Fuel System Cooler is mounted in front of the rear axle.
- **Horsepower:** 215 hp @ 2,500 rpm **Torque:** 452 lb.-ft. @ 1,850 rpm
- **Lubrication:** The lubrication system features a gear-driven pump which provides direct lubrication of the main, connecting rod and cam shaft bearings. The piston crowns are also oil cooled. The oil pump capacity has been increased to provide increased oiling for reduced wear and improved reliability. The 4HK1-TC engine also features a plate type oil cooler in the water jacket to help control oil temperature. The Closed Crankcase Ventilation (CCV) System has been redesigned to dramatically reduce oil carryover. This will improve emissions performance and engine reliability, and reduce oil in the intake system. The oil cooler capacity has been increased to improve cooling performance. A full flow oil filter is standard. The engine uses only low ash oil as specified in the Owner Manual for vehicles equipped with a Diesel Particulate Filter (DPF) emission system. Oil change intervals are 10,000 miles.

Oil Capacity is 2.91 gallons (11.0 liters).

- **Main Engine Fuel Filter:** Five micron main engine fuel filter.
- **Piston:** The high strength aluminum alloy pistons are cam ground. This process allows them to assume a round shape when warm so they will precisely match the shape of the cylinder. This means that the piston ring assembly seals better, and results in longer engine life. The top ring carrier is cast into the top ring groove, and four sides of the top ring are nitrided and the outside is coated with hard metal to ensure sufficient strength and wear resistance between the ring and groove. The piston skirt has graphite coating.
- **Preheating System:** Diesel engines are compression ignited, making them difficult to start when they are cold. Preheating means warming the compressed air inside the combustion chambers using glow plugs to facilitate engine starting. Start the engine after the Wait-to-Start light has turned OFF.
- **Turbocharger Overview:**

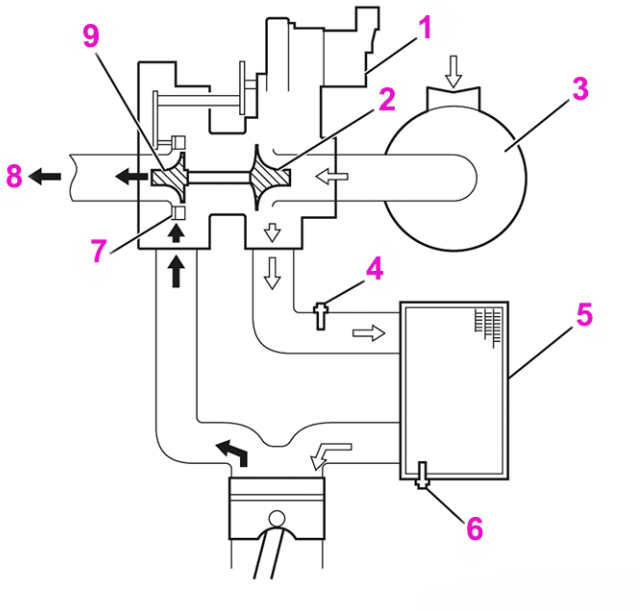

Turbocharger System Diagram

1) VNT Actuator and Sensor

2) Compressor Wheel

3) Air Cleaner

4) Turbocharger Outlet Air Temperature Sensor

5) Charge Air Cooler (CAC)

6) CAC Temperature Sensor 2

7) Nozzles

8) Exhaust Gas

9) Turbine Wheel

- **Turbocharger:** The 5.2L uses a Variable Vane Turbocharger with a Charge Air Cooler which provides excellent boost response over the entire RPM range of the engine. The turbocharger is used to increase the amount of air that enters the engine cylinders. This allows a proportional increase of fuel to be injected into the cylinders, resulting in increased power output, more complete combustion, and decreasing the temperature of the cylinder heads, pistons, valves, and exhaust gas. This cooling effect extends engine life. The compressor wheel is attached directly to the turbine shaft so the compressor wheel rotates at the same speed as the turbine wheel. The turbocharger compressor wheel has been upgraded to a new, higher efficiency wheel which improves fuel consumption and also reduces emissions. The turbocharger housing structure has been strengthened mechanically to improve reliability.
- **Charge Air Cooler:** The charge air cooler (CAC) is an air-to-air heat exchange device used on this engine to improve its volumetric efficiency by increasing intake air-charge density through isochoric cooling.
- **CAC Temperature Sensor 2:** The CAC Temperature Sensor 2 is installed downstream of the CAC. The CAC Temperature Sensors is a variable resistor. The CAC Temperature Sensor 2 measures the temperature of the air in the outlet of the CAC. When the CAC Temperature Sensor is cold, the sensor resistance increases. When the CAC Temperature Sensor is hot, the sensor resistance decreases. With high sensor resistance, the ECM detects a high voltage on the signal circuit. With lower sensor resistance, the ECM detects a lower voltage on the signal circuit.
- **Turbocharger Outlet Air Temperature Sensor:** The Turbocharger Outlet Air Temperature Sensor is installed in the turbocharger outlet pipe. The

Turbocharger Outlet Air Temperature Sensor is a variable resistor that measures the temperature of the turbocharger outlet air. When the turbocharger outlet air temperature sensor is cold, the sensor resistance increases. When the turbocharger outlet air temperature is hot, the sensor resistance decreases. With high sensor resistance, the ECM detects a high voltage on the signal circuit. With lower sensor resistance, the ECM detects a lower voltage on the signal circuit.

- **Variable Nozzle Turbocharger Control Module:** The position of the turbocharger variable nozzle is controlled by the Variable Nozzle Turbocharger (VNT) control module, based on the command from the ECM. Because the VNT control module continuously controls the boost, there is no need for a wastegate in the system. When the engine is in a low load condition, the turbocharger nozzles are moved to the open directio and boost pressure becomes less. When the engine is in a high load condition, the VNT control module commands the control solenoid to close the turbocharger nozzles, and the boost pressure increases. The ECM will vary the target boost pressure depending upon the requirements of engine power output.

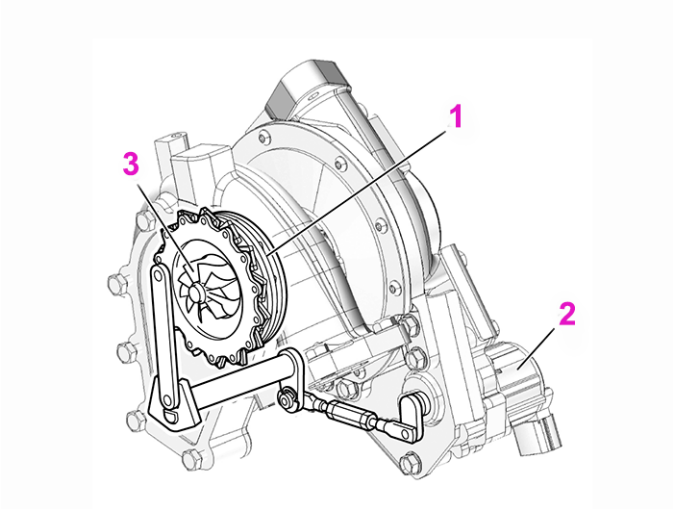

- **Variable Nozzle Turbocharger Actuator and Sensor:** ***The VNT System is controlled overall by the ECM.*** The position of the Turbocharger Variable Nozzle is controlled by the Variable Nozzle Turbocharger (VNT) control module based on command from the ECM and is actuated electrically by a servo motor that is attached to the turbocharger assembly via the control linkage.

1) Nozzle

2) VNT Actuator and Sensor

3) Turbine Wheel

Engine Coolant — 5.2L I4 4HK1-TC Diesel

The diesel engines use a long life coolant which is ***green*** in color. The addition of conventional green propylene glycol coolant will damage the engine. The factory installed long life green engine coolant will ***not*** be available from GM CCA.

It is recommended to only use ***yellow long life anti-freeze/coolant*** GM P/N 12378560 (AC Delco 10-5034) in the MD LCF diesel engines. This is the ***only*** product that has been certified as compatible with the original long life green diesel engine coolant.

Engine Oil — 5.2L I4 4HK1-TC Diesel

Engine Oil

Engine oil is an important factor determining engine performance and longevity. Be sure to use only the specified oil and oil filters. The engine oil level must be checked and the oil should be changed regularly according to the Maintenance Schedule. When particulate matter (PM) has accumulated to a preset level in the diesel particulate filter (DPF), the filter is automatically regenerated through combustion. To make this regeneration possible, a small amount of fuel is injected into the engine combustion chamber after firing. This causes fuel to gradually become mixed with the engine oil, and the ***engine oil level may rise beyond the original level.*** This does not indicate a malfunction of the engine.

Low Ash Engine Oil

GM recommends using low ash oil engine oil, which supports the DPF. Using an engine oil that is not low ash will increase the particulate matter (PM) produced by engine combustion. Consequently, the maintenance interval of the DPF filter will be reduced.

Oil Identification Logo and Viscosity Grade

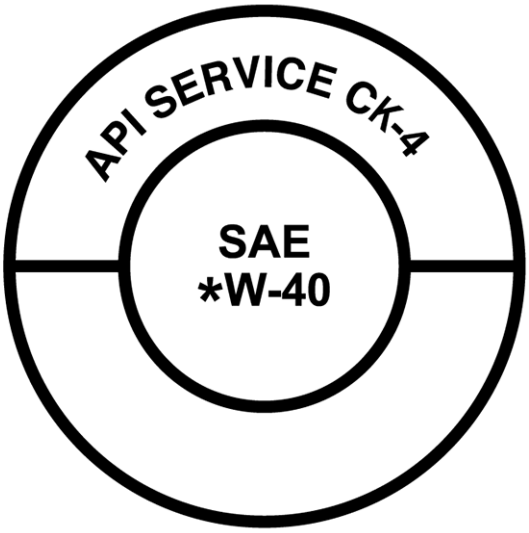

A logo (symbol) is used on most oil containers to help select the proper engine oil to use. The top portion of the logo shows the oil quality by API designations such as CK4 or others. The center portion of the logo shows the SAE viscosity grade, such as SAE *W-40 (* indicates viscosity on the low temperature side). Look for this logo on the oil container, and ONLY use oil displaying the logo. Engine oils with the letters CK-4 and viscosity grade SAE *W-40 are required for th 5.2L 4HK1 engine. The CK-4 designation can appear either alone or in combination with other American Petroleum Institute (API) designations, such as API CK 4/SL.

Checking the Engine Oil Level Using Switch

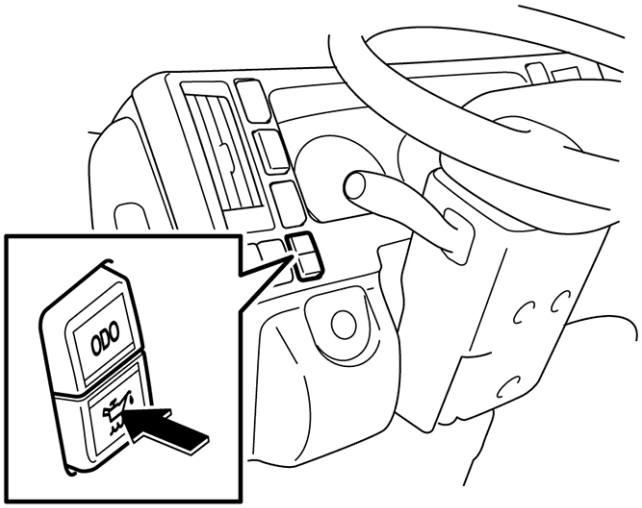

The oil level varies while the engine is running, right after it is stopped, and on sloping ground. When checking the oil level, be sure the vehicle is on level groun while the engine is cool. Press the engine oil level check switch on the dash. If the engine oil level is low, the red oil pressure warning light will turn ON. If the engine oil level is within the acceptable level, the green oil level indicator will turn ON.

Checking the Engine Oil Level Using the Dipstick

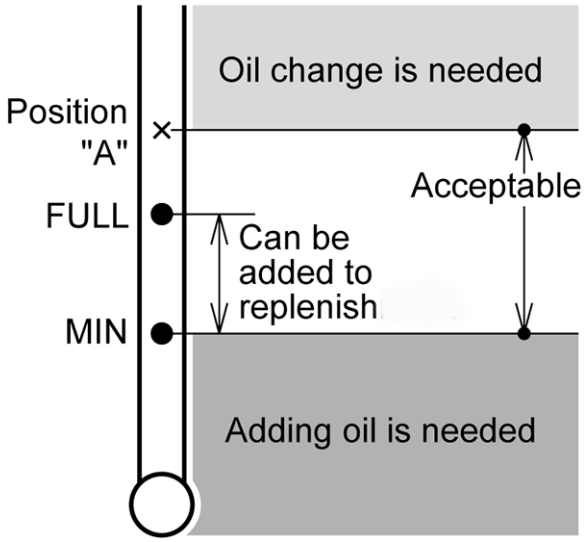

1. Remove the oil dipstick and wipe off any oil on the oil dipstick.
2. Reinsert the oil dipstick fully and then gently remove it. The oil is at an acceptable level if the oil level is between the Position “A" and MIN marks.
3. If the oil level is too low, add oil to the "FULL" mark.
4. If the oil level is beyond the Position “A" mark, the oil needs to be changed.
5. Reinstall the oil dipstick.

Exhaust — Diesel Particulate Filter System — 3.0L 4JJ1 and 5.2L 4HK1

Diesel Particulate Filter System — Overview

The DPF system used on the 3.0L 4JJ1 is the same as the DPF system for the 5.2L 4HK1, ***except the 3.0L 4JJ1 system does not have a DPF Fuel Injector in the exhaust system for regeneration.*** The 3.0L 4JJ1 uses post injection from the main injectors during a DPF regeneration event instead of a DPF Fuel Injector as used on the 5.2L 4HK1.

Diesel Particulate Filter System

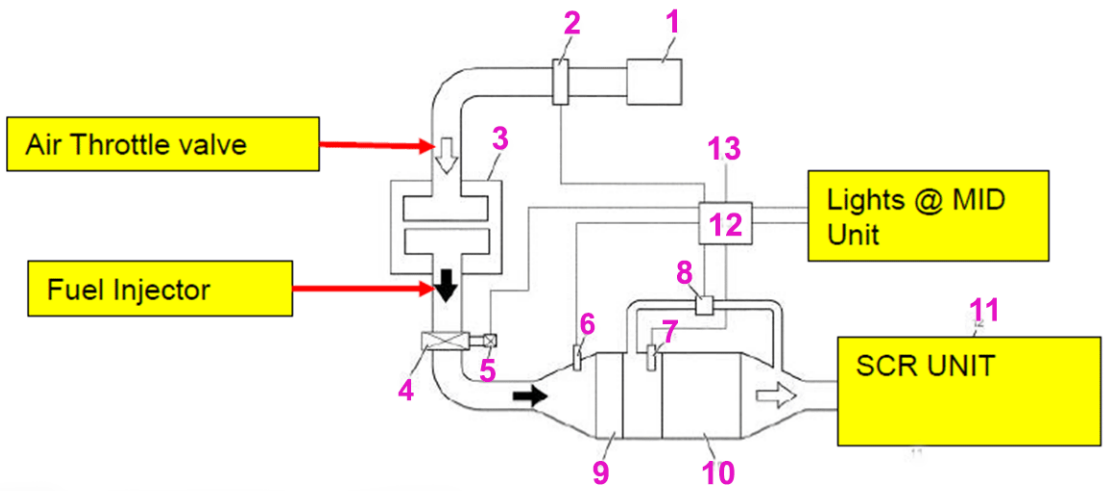

DPF System Diagram

1) Air Cleaner

2) MAF Sensor

3) Engine Assembly

4) Exhaust Brake Valve

5) Exhaust Brake Valve Solenoid

6) EGT Sensor 1

7) EGT Sensor 2

8) Exhaust Differential Pressure Sensor

9) Diesel Oxidizing Catalyst (DOC)

10) Diesel Particulate Filter (DPF)

11) Selective Catalytic Reduction (SCR) Assembly

12) ECM

13) Various Sensor Inputs to ECM

Diesel Oxidizing Catalyst

ptxt

The Diesel Oxidizing Catalyst (DOC) is designed to oxidize carbon monoxide (CO), hydrocarbons (HC), and the Particulate Matter (PM) to meet current EPA emissions standards. Diesel exhaust contains sufficient amounts of oxygen, between 3 and 17%, depending on the engine load, necessary for the oxidation reaction to occur, which results in CO2 and H2O. A minimum exhaust temperature of 392°F (200°C) is necessary for the catalyst oxidation to take place. The catalyst activity efficiency increases with temperature.

Diesel Particulate Filter

The Diesel Particulate Filter (DPF)_ is designed to capture the Particulate Matter (PM) or soot, and to reduce exhaust emissions. Conversion of PM is an important function of the modern diesel oxidation catalyst. Conversion of PM may reach and exceed 80% at higher temperatures, but at lower temperatures, approximately 572°F (300°C), the total PM conversion is usually between 30 and 50%.

Exhaust Brake Valve

The Exhaust Brake Valve is used to help increase exhaust temperatures for Regeneration, for the Quick Warming-up System (QWS) and brake assistance on some models. The ECM controls the exhaust brake valve solenoid based on the DPF Regeneration status or exhaust brake command signal. The ECM energizes the exhaust brake solenoid which then applies vacuum to the diaphragm chamber to operate the exhaust brake valve. The exhaust brake valve is installed in front of the DPF housing.

- ⇒ If the Exhaust Brake Valve is not working properly, binding or misadjusted, exhaust temperatures may not be sufficient for Stationary Regeneration to occur or an over-temperature condition may occur.

Exhaust Differential Pressure Sensor

The Exhaust Differential Pressure Sensor is mounted on the chassis frame near the DPF assembly. The Exhaust Differential Pressure Sensor is a transducer that varies voltage according to changes in the exhaust gas pressure between the front and rear of the DPF filter. The Exhaust Differential Pressure Sensor provides a signal to the ECM on the signal circuit, which is relative to the pressure changes in front and in rear of the DPF filter. A low signal voltage indicates a small PM accumulation. A high signal voltage indicates a large PM accumulation.

Exhaust Gas Temperature Sensors

The Exhaust Gas Temperature (EGT) Sensor 1 and EGT Sensor 2 are installed in the DPF housing. Both EGT Sensors are a variable resistor. The EGT Sensor 1 measures the temperature of the exhaust gas in front of the DOC and EGT Sensor 2 measures the temperature of the exhaust gas in front of the DPF. When the exhaust temperature sensor is cold, the sensor resistance is high. When the exhaust temperature increases, the sensor resistance decreases. With high sensor resistance, the ECM detects a high voltage on the signal circuit. With low sensor resistance, the ECM detects a lower voltage on the signal circuit.

Intake Air Flow Valve

The position of the Intake Air Flow Valve (IAFV) is controlled by the ECM based on engine operating conditions. The ECM has the ability to accelerate engine warm-up by closing the IAFV and the exhaust brake valve during cold engine temperatures. During EGR operation, the ECM controls the IAFV to allow the proper amount of EGR flow into the intake air stream. During stationary Regeneration, the ECM controls the IAFV & Exhaust Brake Valve to maintain Regeneration temperatures in the proper range.

Particulate Matter (PM) Sensor

The PM Sensor is installed in the tailpipe downstream of the SCR. In order to detect DPF damage, the PM Sensor is used to measure the PM amount from exhaust gas that has passed through the DPF. The ECM and the PM Sensor communicate control and diagnostic information via the CAN communication bus. The PM Sensor integrates the value sensor, temperature sensor, heater and controller. The built-in controller continuously supplies voltage to all sensors and the heater, and monitors current changes. Also, it performs trouble diagnosis for all parts. If there is good conductivity between the PM Sensor and the soot deposits, resistance of the sensor decreases and the current into the controller increases. The value of the current detected by the PM Sensor is sent to the ECM, and the ECM determines from the value of the current if Regeneration is necessary. The ECM Regenerates the PM Sensor if the value of the current exceeds a specified value.

Regeneration

The accumulated PM on the DPF must be burned off periodically in a process called Regeneration. Without this process the DPF can become restricted, causing lack of power, a no start condition and/or possible damage to the DPF filter. The ECM monitors the Exhaust Differential Pressure Sensor to determine when Regeneration is needed. During Regeneration, the ECM injects diesel fuel into the exhaust system using the DPF Fuel Injector. This added fuel raises the exhaust temperature (at EGT #2) above the minimum 1100°F (594°C) to begin and sustain the regeneration process. If the exhaust temperature is too low, or becomes too low, additional fuel is added and the exhaust brake valve is activated to increase the exhaust temperatures to the necessary threshold. Regeneration can take place in Automatic mode, Selectable Mode, or Emergency Mode.

Exhaust — Selective Catalytic Reduction — 3.0L 4JJ1 and 5.2L 4HK1

Selective Catalytic Reduction System

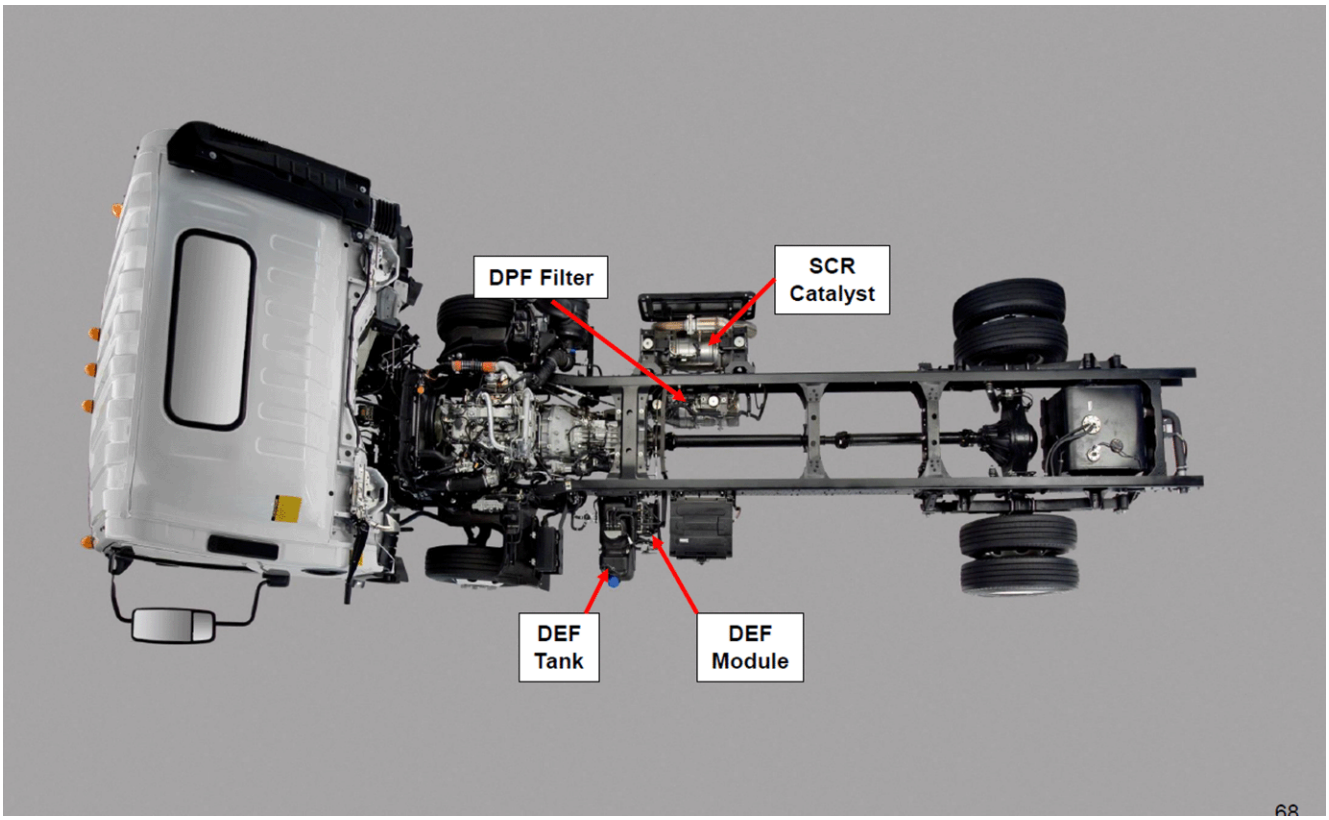

The Selective Catalytic Reduction (SCR) System eliminates NOx contained in the exhaust gas by converting it into harmless nitrogen by means of reductive reaction. DEF is used to induce the reductive reaction, and the reaction is facilitated through the SCR catalyst. The DEF control module controls the pressurized DEF injection amount, using information from the ECM, NOx Sensors, etc., and injects the DEF using the injector installed on the exhaust pipe (5.2L 4HK1 only). The injected DEF is hydrolyzed by the heat from the exhaust gas which generates ammonia, and the generated ammonia induces a reductive reaction with NOx, which decomposes the NOx into water and nitrogen and reduces emissions.

SCR Catalyst

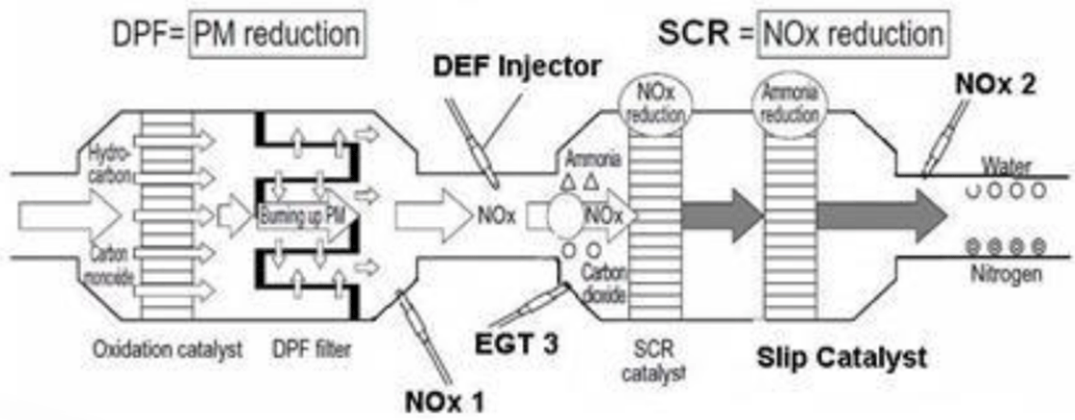

The SCR System is added onto the Exhaust System after the DOC/DPF. The SCR consists of the following 2 catalysts:

- 1) Catalyst 1 which stores the DEF fluid and the amount that is stored is dependent upon catalyst temperature.
- 2) Catalyst 2 which is called a Slip Catalyst, is positioned after the main SCR catalyst and is used to prevent ammonia release at the tailpipe.

Diesel Exhaust Fluid Control Module

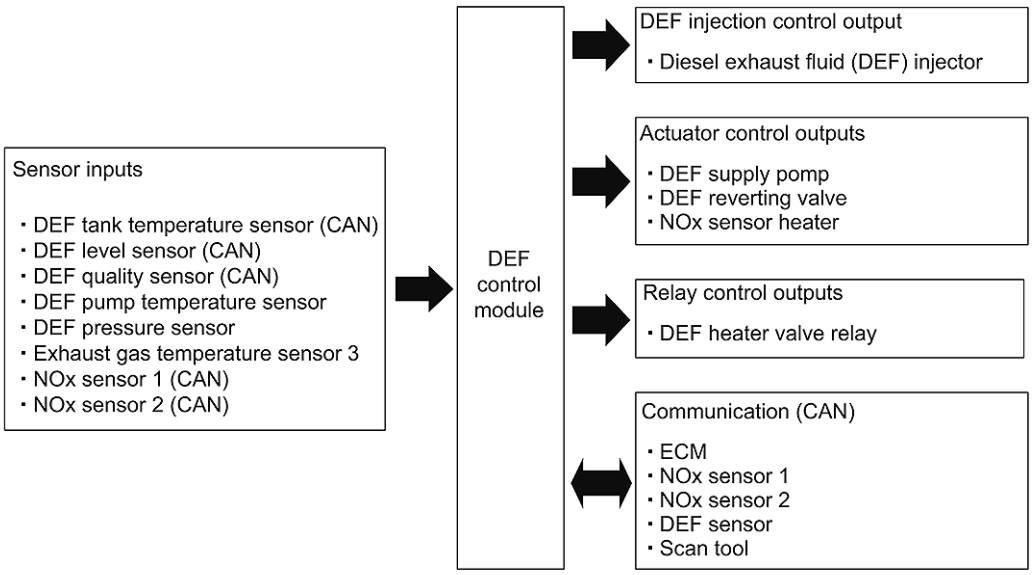

Caution: Do not block the DEF Module air vent. Keep water away from the air vent. Do not submerge the DEF module in water.

The Diesel Exhaust Fluid (DEF) Module constantly monitors the NOx Sensors, the EGT 3 Sensor, the DEF tank sender and ECM data. Based on these inputs, the DEF Module controls the DEF Fluid Supply Pump and DEF Injector operation (5.2L 4HK1 only). The DEF Module performs diagnostics of the DEF Injector and NOx Sensors. When SCR faults occur, the DEF module may set a code, and turn ON the DEF Warning Lamp, while sending a message to the ECM. SCR codes, both Active and History, are stored in the DEF Module, with the exception of P20C9 Diesel Exhaust Fluid (DEF) Control Module Requested MIL Illumination. This code is stored in the ECM and will cause the MIL to turn ON.

Diesel Exhaust Fluid

Notice: The contamination of DEF can result in a malfunction of the SCR system. Additionally, it can cause damage to the catalysts and result in

a system failure. Additionally, DEF freezes when exposed to temperatures colder than 12°F (−11°C).

DEF is colorless, non-hazardous, and non-flammable and is extremely sensitive to chemical impurities. For this reason, it is imperative that DEF be handled carefully to prevent any sort of contamination. DEF is an aqueous urea solution made with 32.5% urea and 67.5% deionized water. It is used as a consumable in selective catalytic reduction (SCR) in order to lower NOx concentration in the diesel exhaust emissions. DEF consumption is approximately 1% to 2% of fuel consumption. That means 1-2 gallons of DEF are used for every 100 gallons of fuel consumed. DEF usage will vary depending on driving style, if towing a trailer, loaded vehicle weight, weather, idle time and PTO usage. DEF has a shelf life of 2 years. However, this can be reduced if the fluid is exposed to direct sunlight or temperatures warmer than 86°F (30°C) for sustained periods of time. All DEF packaging should be labeled with a production date.

Diesel Exhaust Fluid Injector

The DEF Injector is installed in the inlet of the SCR catalyst. The DEF Injector is subject to extremely hot exhaust temperatures. For this reason, engine coolant is continuously flowing through the DEF Injector to keep it cooled and working correctly. In cold weather, the engine coolant is used as a heating system to defrost the DEF fluid.

Diesel Exhaust Fluid Supply Pump

The DEF supply pump is installed near the DEF tank on the left side frame rail. After the engine has been started, the diaphragm pump is activated to pressurize the DEF up to 130 psi (900 kPa) in order to meet operating requirements. After that, the DEF control module makes a calculation based on the value from the DEF Pressure Sensor inside of the DEF supply pump, and maintains the DEF pressure at the operating requirement. When the engine is stopped, the DEF control module operates the DEF supply pump ***after*** switching the reverting valve to return the DEF inside the DEF injector, DEF piping and DEF supply pump back into the DEF tank to prevent those components from being damaged in freezing temperatures.

Diesel Exhaust Fluid Tank

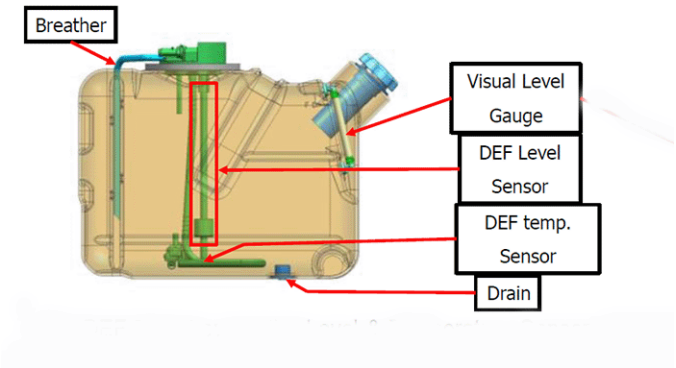

Caution: Take care when filling the DEF tank. Do not over fill the DEF tank. DEF is highly corrosive to electrical connectors, wiring, rubber, metallic parts and painted surfaces. If any of these components come in contact with DEF, wash the area thoroughly with warm water and allow to completely dry before proceeding. Perform a visual inspection for any damage if any parts of the vehicle have been exposed to DEF.

The DEF tank is installed on the frame at the left side of vehicle, and is made of special resin which provides lightweight and robustness. The DEF Tank houses the Level & Temperature Sensor, has a drain plug and a tamper resistant filler insert to prevent filling with fluids other than DEF fluids. The internal pickup includes the Coolant Heating Tube and Gauge Sending Unit. The pickup is serviced as a complete assembly.

Diesel Exhaust Fluid Gauge

When the engine control switch is in the ON position, this gauge indicates the approximate quantity of DEF remaining in the DEF tank. **F** means the tank is full and **E** means the tank is almost empty. When only one green bar is showing, the DEF tank is almost empty and should be refilled soon. If the vehicle is driven too long with only one bar, the green will change to amber and additional warnings and indicators will display. Vehicle speed will be severely limited when the DEF tank is empty. Be sure to add DEF in advance of the empty status.

Diesel Exhaust Fluid Tank — Checking the Level

Notice: The sight tube on the DEF tank only shows the top portion of the tank in order to prevent over filling. Even if the fluid is not visible in the sight tube, there may still be fluid in the tank. Checking the DEF level using the MID display on the instrument cluster is the recommended method.

Diesel Exhaust Fluid Cooling and Heating System

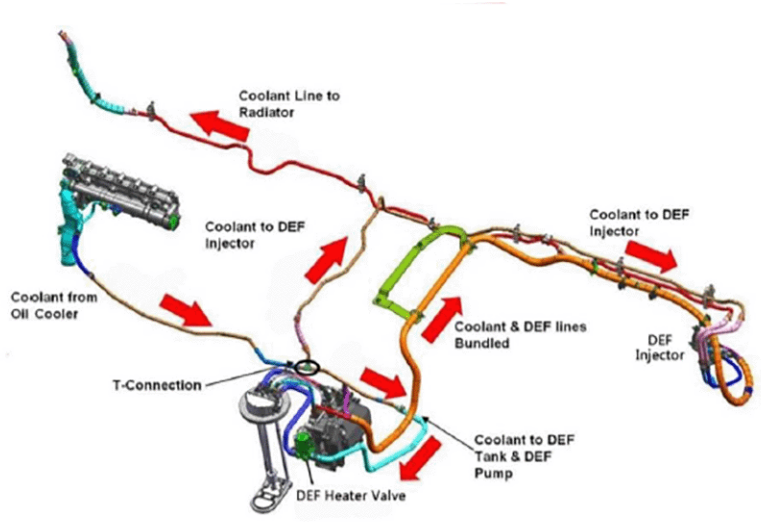

Diesel Exhaust Fluid Cooling and Heating System Diagram

- **DEF Cooling and Heating System Operation:** When the engine is first started, if temperatures are below 20°F (-7°C), the DEF Control Module opens the DEF Heater Control Valve. This allows engine coolant to circulate through the DEF Tank and DEF Supply Pump Module. When the sensors indicate DEF temperatures are above a specified value, the DEF Heater Control Valve closes, ending the Defrost Cycle. If the signal from the DEF Tank Temperature Sensor or the DEF Supply Pump Temperature Sensor falls below the specified value again, the Defrost Cycle is repeated.
- **Thermal Control:** After a certain period of engine run time, if the AAT/IAT1 Sensor signal is at or colder than the specified value, the DEF Control Module will keep the DEF Heater Control Valve open.
- **Tip:** Whenever the DEF cooling lines are opened for any reason, the DEF Heater Control Valve ***must*** be cycled to purge air from the lines. Use the GDS 2 Output Test: DEF Heater Valve Relay to purge the air.

Diesel Exhaust Fluid Auxiliary Heater

The system uses engine coolant heat to meet DEF thaw guidelines. ***Auxiliary heaters are NOT allowed to draw heat from the engine coolant*** because it may increase DEF thaw times beyond acceptable guidelines. If equipped, the auxiliary heater must include a self-contained heat source. DEF freezes when exposed to temperatures colder than 12°F (-11°C). In cold conditions it is normal for DEF to freeze. The tank and delivery lines are heated to thaw frozen DEF. When filling the tank in cold conditions, the vehicle may not recognize the new level until the tank thaws. In certain cold conditions, it is possible to find some frozen DEF in the DEF fill pipe opening. When travelling in extremely cold areas, it is recommended to fill the tank prior to cold temperature exposure.

Diesel Exhaust Fluid Indicator Lamp

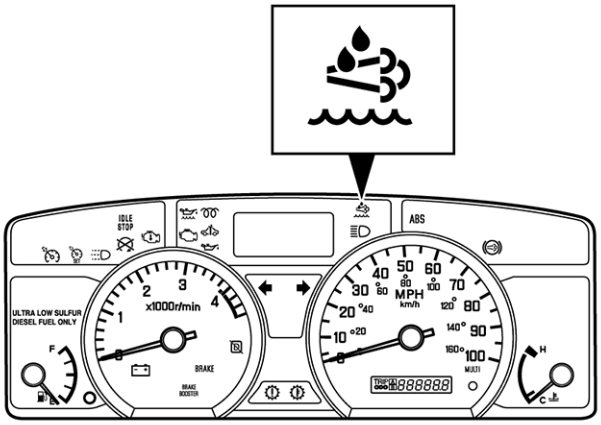

The DEF indicator lamp is located in the instrument panel cluster. The DEF indicator lamp will illuminate if any of the following conditions occur and vehicle service is required.

- A malfunction of the SCR system.
- The DEF level is too low or empty.
- The DEF tank is refilled with any fluid other than DEF, such as water, low-concentrated DEF, engine coolant etc.

Diesel Exhaust Fluid Tank Temperature Sensor

The DEF Tank Temperature Sensor is a variable thermistor that measures the temperature of the DEF using the changes in the resistance value that correspond to the changes in temperature. The resistance decreases when the DEF temperature is high and increases when the DEF temperature is low. The DEF control module performs the DEF defrosting control and thermal control based on the signal from the DEF Tank Temperature Sensor.

Diesel Exhaust Fluid Quality Sensor

The DEF Quality Sensor measures the concentration of the urea in the DEF fluid by applying ultrasonic waves to the fluid and measuring the time between the transmission and reception of the ultrasonic waves. The DEF control module determines whether the urea quality is abnormal, based on the signal from the sensor.

Exhaust Gas Temperature Sensor 3

The Exhaust Gas Temperature (EGT) Sensor 3 is a variable resistance temperature sensor which is installed on the inlet of the SCR catalyst, and measures the temperature of the exhaust gas before the SCR catalyst and transmits that information to the DEF control module.

NOx Sensors

The NOx Sensors are installed in the front and rear of the SCR catalyst. NOx Sensor 1 is installed in the SCR catalyst upstream, and detects the NOx concentration exiting from the engine. NOx Sensor 2 is installed in the SCR catalyst downstream, and detects the NOx concentration after NOx conversion by the SCR catalyst. The DEF control module monitors the NOx conversion efficiency using these NOx Sensors. The DEF control module calculates the required DEF injection amount based on the signals from these NOx Sensors.

Driver Information Center

The Driver Information Center (DIC) is located in the upper center portion of the Instrument Panel Cluster (IPC).

The DIC can display Driver Controlled Information, Non-Driver Controlled Information, Warning Lamps and Messages. The following are some of the items that are visible on the DIC:

Driver Information Displays

- Current Date
- Current Time
- DEF Tank Level
- Battery Voltage
- Tire Rotation Reminder
- Fuel Filter Service Reminder
- Engine Oil & Filter Service Reminder

- Fuel Economy Instant Average
- Fuel Economy Average for a Trip
- Language Selection
- Illumination Dimmer Setting
- DPF PM Level
- Water In Fuel
- Hour Meter

Warning Lamps

- Maintenance Reminder
- DEF Warning Lamp
- Battery
- Brake
- Brake Booster
- Oil Pressure
- MIL
- DEF Level

Vehicle Messages — Diesel Only

- Engine Overheat
- Low Coolant
- Water Separator
- Air Cleaner
- Low Fuel Warning
- Regeneration Warning
- Exhaust System Warning
- Refill DEF Warning
- DIC Errors
- Maintenance Data
- Hour Meter

Mimamori System

Vehicle Pigtail Connector

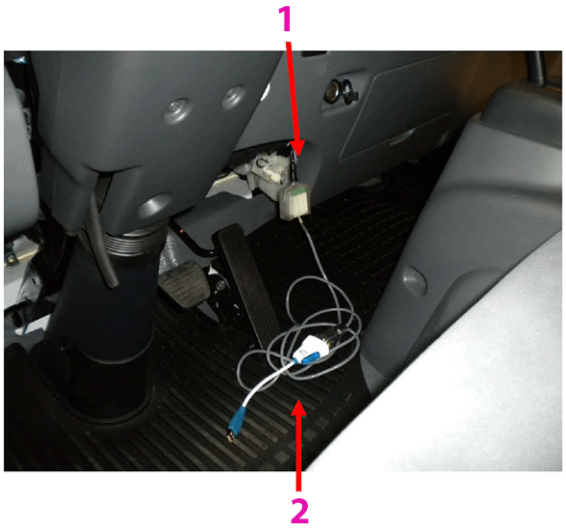

The vehicle pigtail connector (1) is used as the communication gateway (similar to the DLC on other GM vehicles) on this vehicle and is accessible after

removing the relay fuse cover in the center of the lower dash panel. After removing the panel, the connector (1) is located in the lower right corner of the opening. The connector (1) can be identified by its ***green identifying mark*** under the clear plastic cover.

RS232 Cable

The RS232 Cable (2) is an essential tool and must be used to connect to the vehicle pigtail connector (1) in order to download the Vehicle Health Report.

Vehicle Health Report — Download Procedure

The Vehicle Health Report download procedure is similar to previous models. The ignition key must be left **ON** with the engine **OFF** throughout the download procedure. The GDS 2 must be connected to the laptop USB port and the RS232 cable must also be connected to the laptop USB port. During the download the two blue lights on the RS232 cable will be flashing, indicating the download is in process.

Special Tools

There are currently 90 service tools that a dealer may need for this program. However, each dealer's actual tool cost and/or need is dependent on their current tool inventory.

Also, 9 of the 90 service tools have been deferred to the ***Loan Tool Program*** as follows:

Special Tools — Tool Number and Description

Tool Number	Description
EN-49960	Replacer, Injector Nozzle Sleeve
GE-48717	Nozzle Adjuster, Windshield Washer
J-35018	Pinion Bearing Remover
J-35020	Pinion Bearing Cup Installer (292 mm Differential)
J-35021	Differential Side Bearing Installer
J-35030	Differential Side Bearing Puller Pilot
J-36520-B	Cylinder Liner Rem/Inst (Includes J-37365)
J-43680-A	Engine Stand Adapter
J-43283	Valve Guide Remover and Installer

Training Courses

The majority of the systems found on this vehicle are taught in GM's core curriculum from a conceptual theory and operation perspective. The North American technical training core curriculum structure is system based.

To access **all** of the available training courses in the United States, visit the following website: ***www.centerlearning.com***

Training Course Name or System — Course Number and Description

Course Name or System	Course Number and Description
Product Launch Course	#90317.10 — Medium Duty Truck Overview
Powertrain	#90317.11 — Medium Duty Truck Powertrain

Version Information

Version	2
Modified	Nov. 9, 2016 — Changes made to create 16-NA-337 Version 2: This Bulletin has been revised to remove the vehicle manufacturing locations, update the Engine Coolant sections, change all IDSS references to GDS 2 and in the Special Tools section regarding the Dealer's tool inventory, change "previous" to "current".

Trademark Footnotes

The Bluetooth® Word Mark and Logos are Registered Trademarks Owned by Bluetooth SIG, Inc.

The DENSO® Name is a Registered Trademark owned and/or Licensed by DENSO International America, Inc.

Hydra-Matic™ is a Trademark of General Motors LLC

GM bulletins are intended for use by professional technicians, NOT a "do-it-yourselfer". They are written to inform these technicians of conditions that may occur on some vehicles, or to provide information that could assist in the proper service of a vehicle. Properly trained technicians have the equipment, tools, safety instructions, and know-how to do a job properly and safely. If a condition is described, DO NOT assume that the bulletin applies to your vehicle, or that your vehicle will have that condition. See your GM dealer for information on whether your vehicle may benefit from the information.

WE SUPPORT VOLUNTARY TECHNICIAN CERTIFICATION