TECHNICAL INSTRUCTIONS

FOR

SPECIAL SERVICE CAMPAIGN GLE

FUEL TANK RING REPLACEMENT

CERTAIN 2016 MODEL YEAR RX450h

The repair quality of covered vehicles is extremely important to Lexus. All dealership technicians performing this repair are required to successfully complete the most current version of the E-Learning course "Safety Recall and Service Campaign Essentials". To ensure that all vehicles have the repair performed correctly; technicians performing this repair must successfully complete E-Learning LSCFLE AND are required to currently hold <u>at least one</u> of the following certification levels:

- **Senior Service Technician**
- **Senior Diagnostic Specialist**
- **Master Service Technician**
- **Master Diagnostic Specialist**

It is the dealership's responsibility to select technicians with the above certification level or greater to perform this repair. Carefully review your resources, the technician skill level, and ability before assigning technicians to this repair. It is important to consider technician days off and vacation schedules to ensure there are properly trained technicians available to perform this repair at all times.

I. OPERATION FLOW CHART

The flow chart is for reference only. *DO NOT* use it in place of the full technical instructions. Follow *ALL* steps as outlined in the full technical instructions to confirm the campaign is completed correctly.

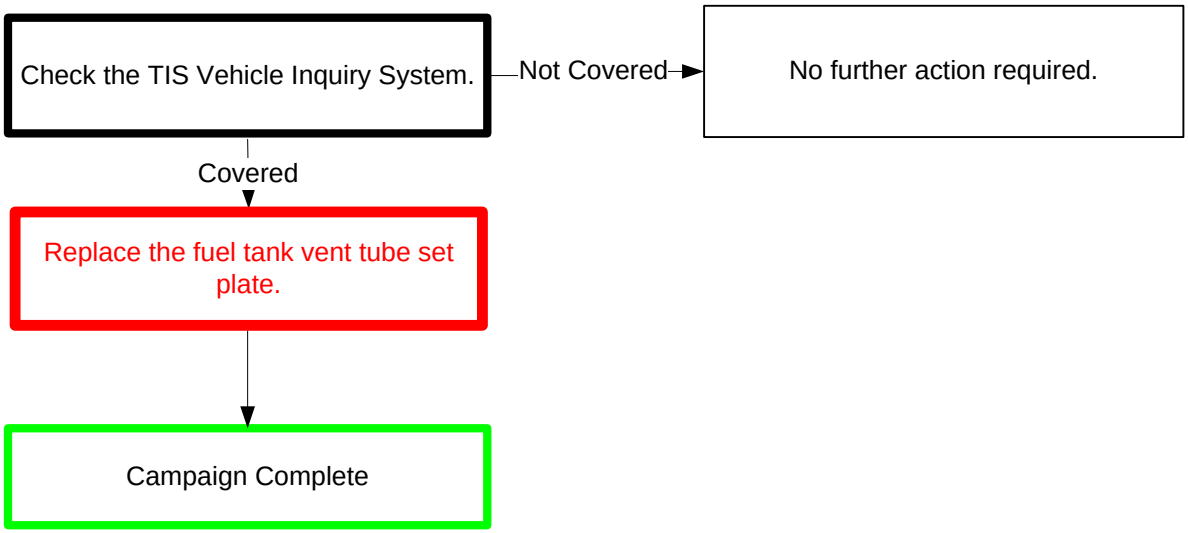

II. BACKGROUND

In the subject vehicles the fuel level float arm in the fuel tank may become obstructed and cause the fuel level gauge to display an inaccurate reading. This could result in the vehicle running out of fuel during operation. If this occurs, the vehicle may illuminate the check engine light and enter EV fail-safe mode.

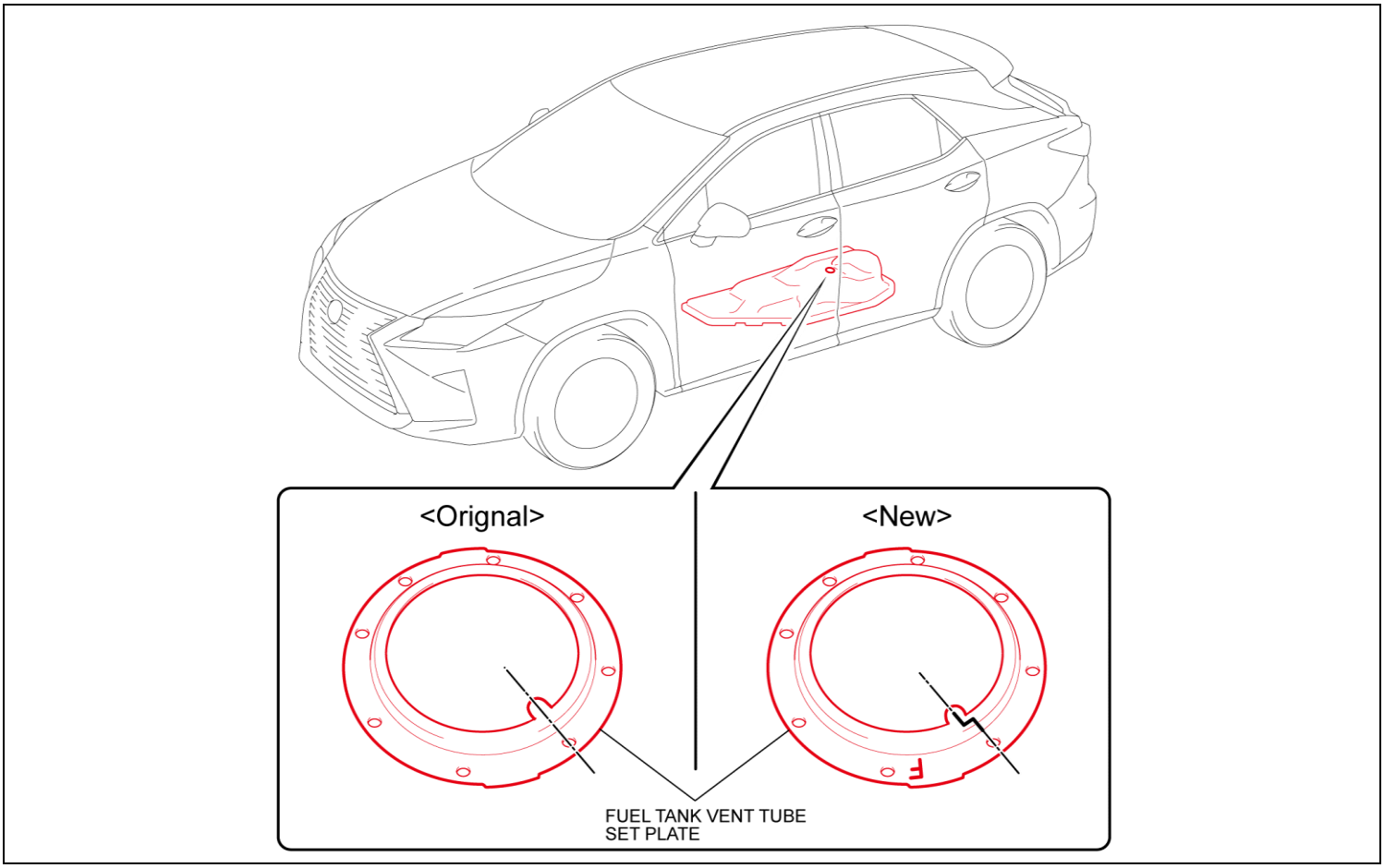

III. IDENTIFICATION OF AFFECTED VEHICLES

- Check the TIS Vehicle Inquiry System to confirm the VIN is involved in this Safety Recall, and that the campaign has not already been completed prior to dealer shipment or by another dealer.
- **TMS warranty will not reimburse dealers for repairs conducted on vehicles that are not affected or were completed by another dealer.**

IV. PREPARATION

A. PARTS

All applicable vehicles will require the parts in the table below

Part Number	Description	Qty
77168-48010	PLATE, FUEL TANK VENT TUBE SET	1
77169-33030	GASKET, FUEL SUCTION TUBE SET	1
17451-0D140	GASKET, EXHAUST PIPE	2

B. MATERIALS

- Vinyl Hose
- Marker Pen
- Plastic Bag

C. TOOLS & EQUIPMENT

- Standard hand tools
- Transmission Jack
- Torque wrench
- Techstream

V. FUEL TANK VENT TUBE SET PLATE REPLACEMENT

A. COMPONENTS

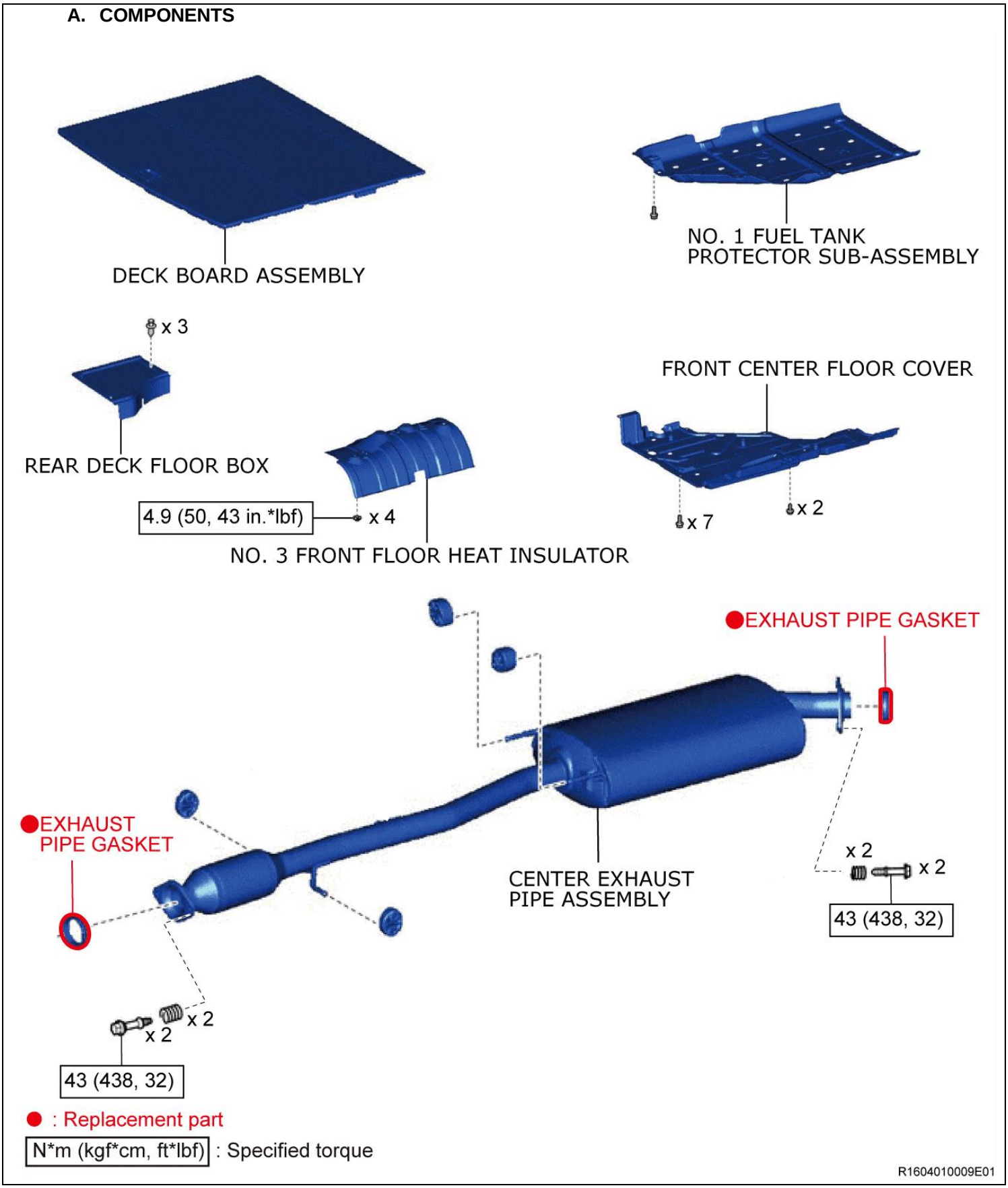

COMPONENTS CONTINUED…

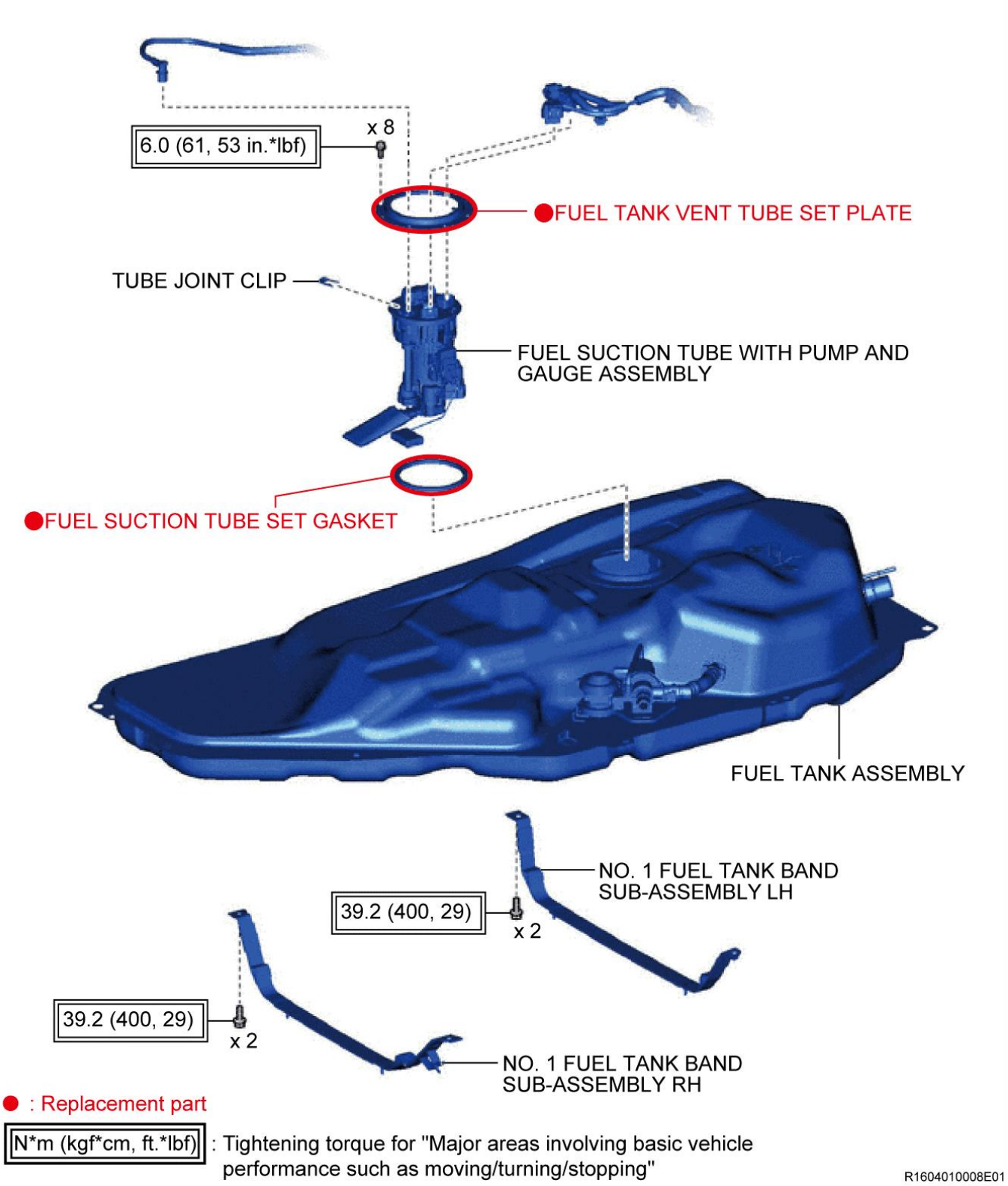

● : Replacement part

N*m (kgf*cm, ft.*lbf) : Tightening torque for "Major areas involving basic vehicle performance such as moving/turning/stopping"

R1604010008E01

B. CONFIRM FUEL TANK

1. CONFIRM IF THE FUEL TANK WAS PREVIOUSLY REPLACED

a) In TIS confirm if the vehicle had the fuel tank previously replaced with part number 77001-0E111.

Previously Replaced with 77001-0E111: No Further Action Required

Vehicle Equipped with Original Tank: Continue with to Step C.

While the majority of vehicles will have the original fuel tank installed, there is a chance a small number of vehicles could have a countermeasure fuel tank previously installed. DO NOT replace the set plate on a counter measured tank, installation of the set plate on the counter measured tank will cause additional stress to be placed on the fuel pump wire harness and fuel lines.

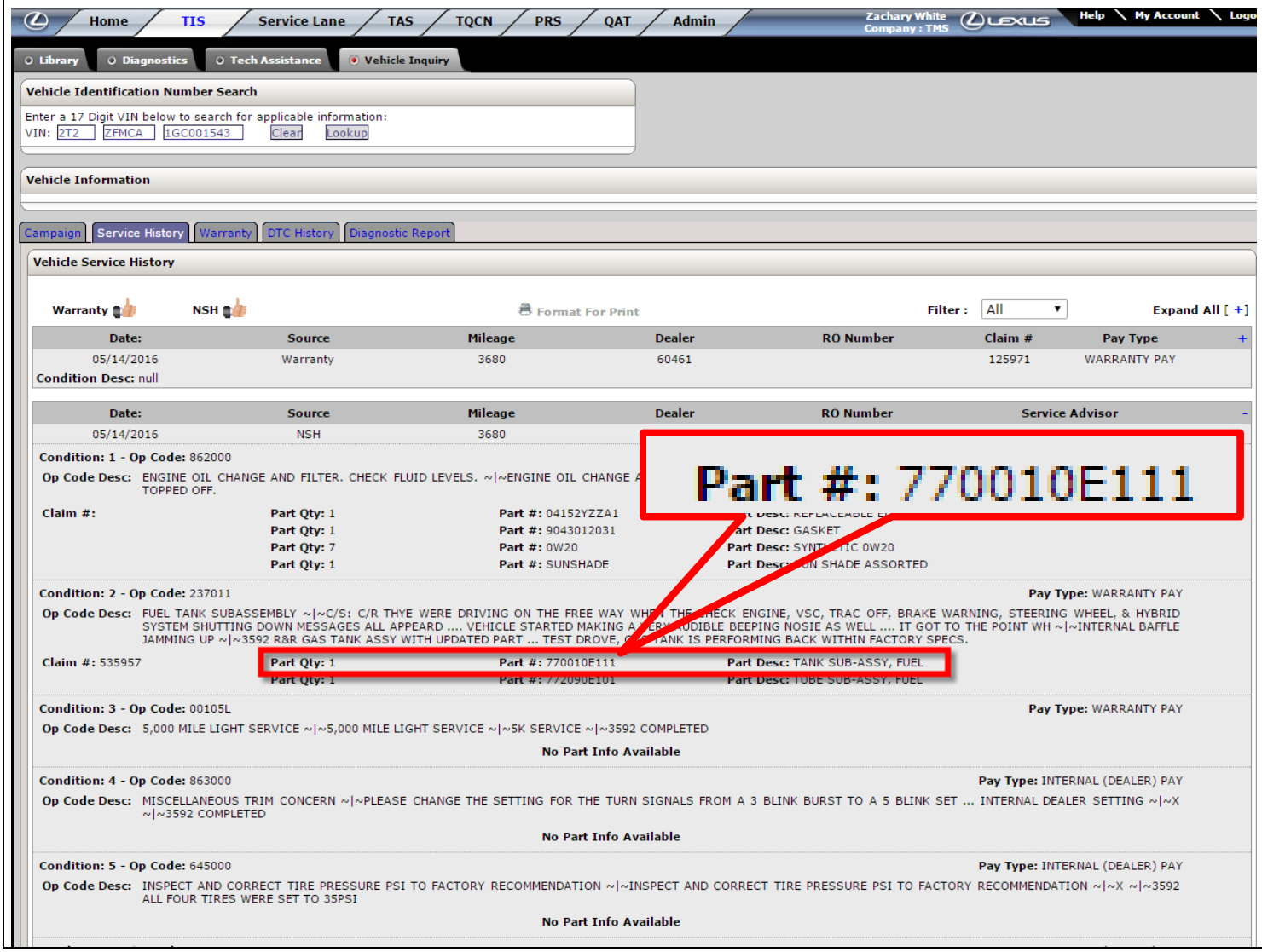

C. FUEL TANK REMOVAL

1. CONFIRM FUEL LEVEL

Note: If the fuel tank is full syphon fuel from tank.

2. DEPRESSURIZE FUEL SYSTEM

[Depressurize Fuel System 2016 RX450h]

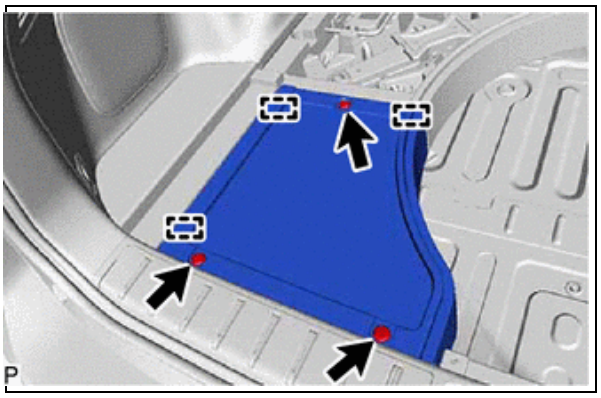

3. DISCONNECT THE BATTERY

a) Remove the deck board assembly.
b) Remove the rear deck floor box.

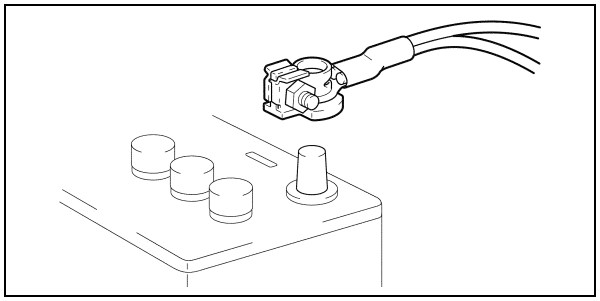

c) Disconnect the battery.

STOP **Wait at least 90 seconds after disconnecting the battery.**

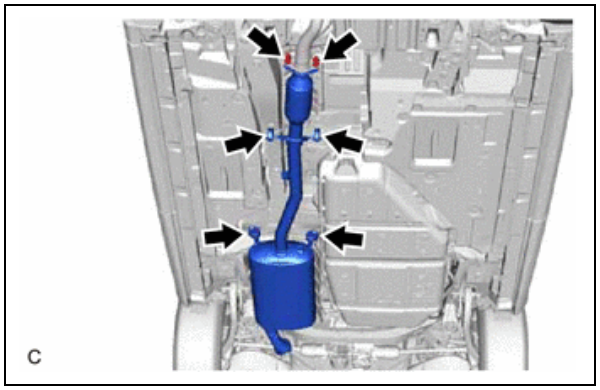

4. REMOVE THE CENTER EXHAUST PIPE ASSEMBLY

a) Remove the 2 bolts and compression springs connecting the center pipe to the tail pipe.
b) Remove the 2 bolts and compression springs connecting the center pipe to the exhaust manifold.
c) Remove the 4 exhaust pipe supports.
d) Remove the center exhaust pipe and gaskets.

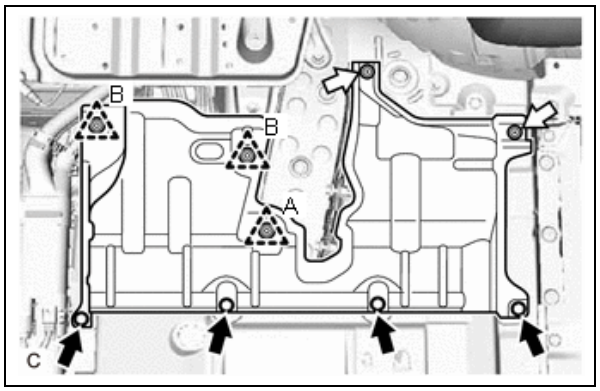

5. REMOVE THE FRONT CENTER FLOOR COVER

a) Remove the clip (A).
b) Remove the 2 screws and 4 bolts.
c) Disengage the 2 clips (B) and remove the cover.

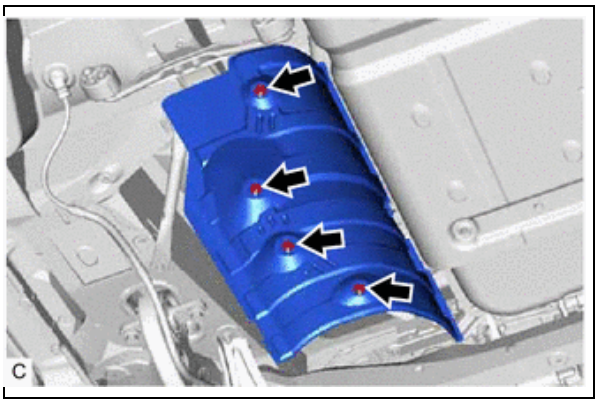

6. REMOVE THE NO. 3 FRONT FLOOR HEAT INSULATOR

a) Remove the 4 nuts and floor insulator from the vehicle body.

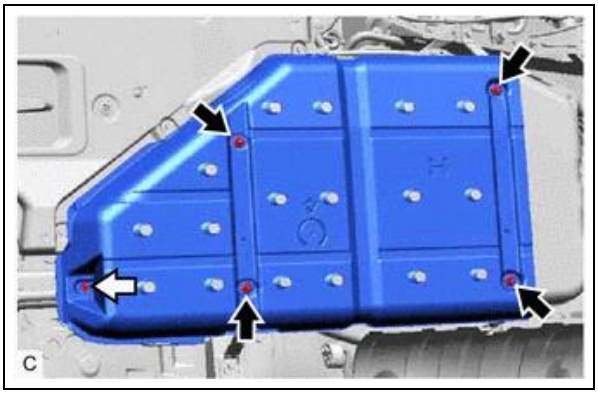

7. REMOVE THE NO. 1 FUEL TANK PROTECTOR

a) Remove the screw.
b) Disengage the 4 grommets and remove the fuel tank protector.

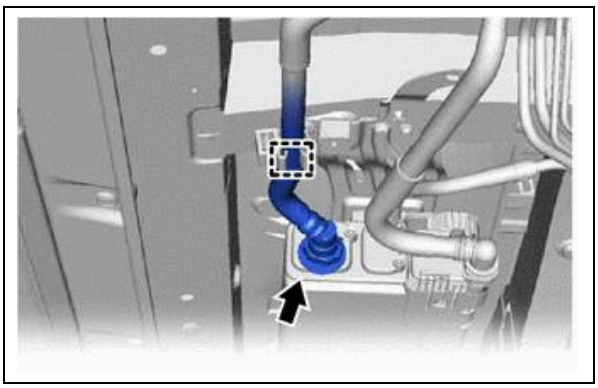

8. DISCONNECT FUEL TANK VENT HOSE

a) Disengage the clamp and disconnect the fuel tank vent hose from the charcoal canister.

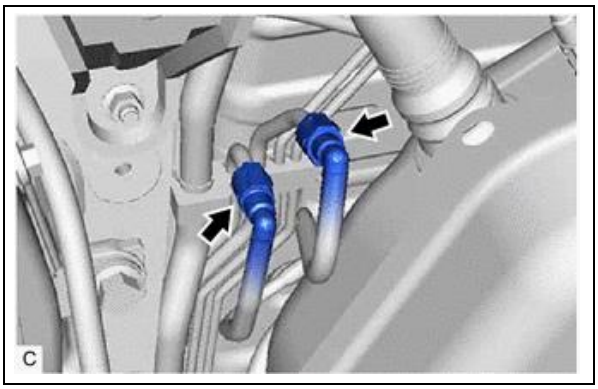

9. DISCONNECT FUEL TANK MAIN TUBE ASSEMBLY

a) Disengage the clamps and disconnect the fuel tubes from the fuel lines.

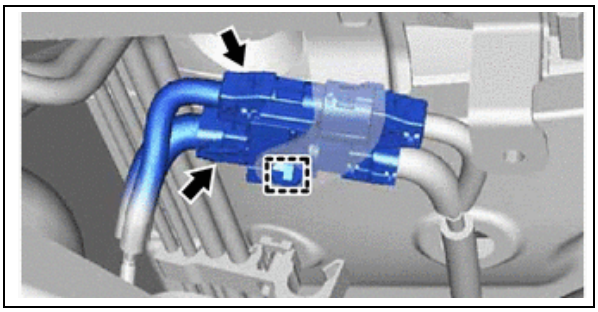

10. DISCONNECT FUEL TANK WIRE HARNESS

a) Disconnect the clamp and disconnect the two wire harness connectors.

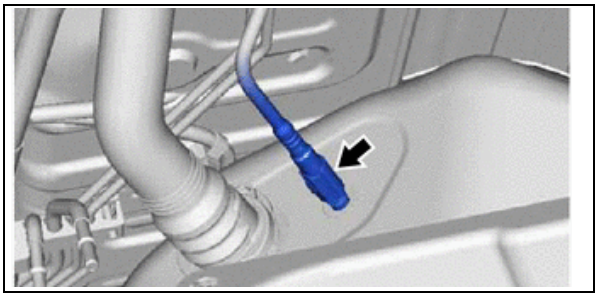

11. DISCONNECT NO. 3 FUEL TANK BREATHER TUBE

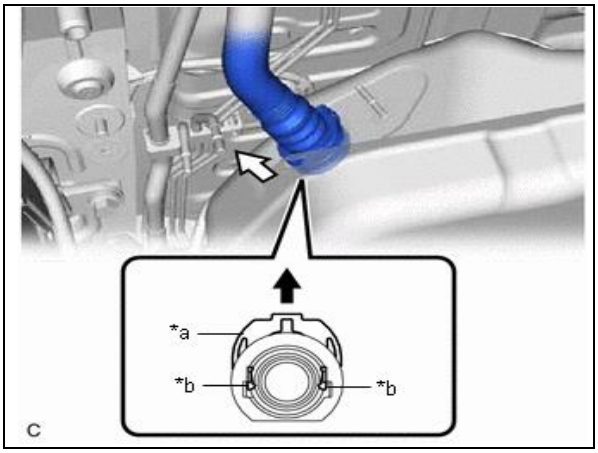

12. DISCONNECT FUEL TANK FILLER PIPE HOSE

a) Pull out the retainer (a) to disengage the lock claw (b).
b) Pull off the fuel tank filler pipe hose from the tank.

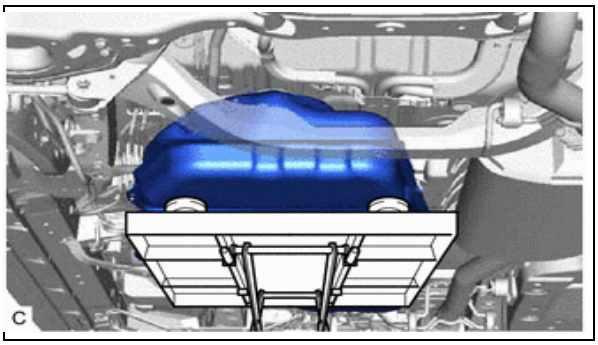

13. REMOVE FUEL TANK

Using a trans jack or engine hoist support the fuekl tank.

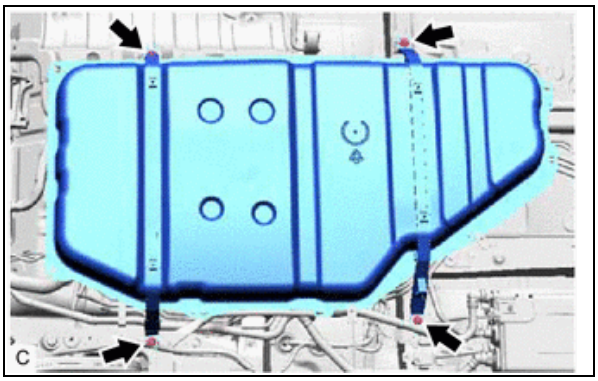

c) Remove the 4 bolts and remove the fuel tank straps.
d) Carefully lower the fuel tank.

D. FUEL TANK VENT TUBE SET RING REMOVAL

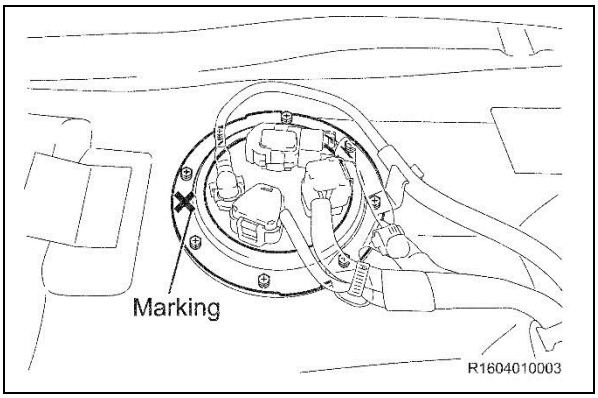

1. MARK THE OLD FUEL TANK SET RING AND CLEAN TOP OF FUEL TANK

a) Clean off the top of the fuel tank to ensure no dirt and debris falls into the tank.
b) Mark the set ring before removal to ensure it does not get reused.

STOP **The new set ring has a different offset, ensure to mark the old one so that it is not reused.**

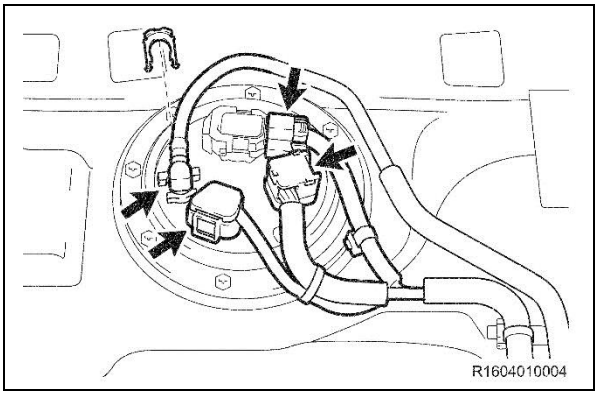

2. DISCONNECT TUBES AND WIRE HARNESS CONNECTORS.

a) Disconnect the fuel pump and fuel pressure sensor electrical connectors.
b) Remove the fuel tube joint clips and remove the fuel tubes.

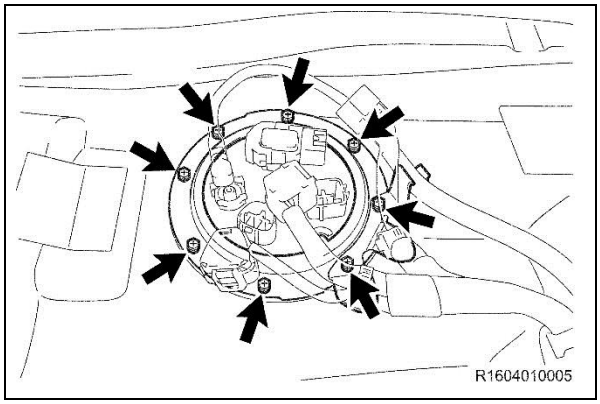

3. REMOVE SET RING BOLTS

a) Remove the 8 set ring bolts and store them in a safe location for reuse.

E. FUEL TANK VENT TUBE SET RING REPLACEMENT

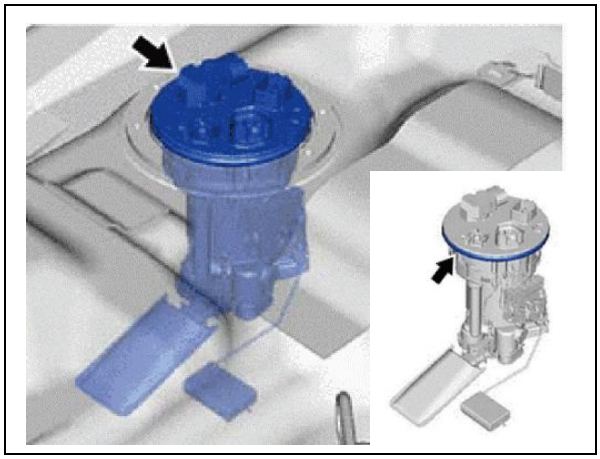

1. REPLACE FUEL SUCTION TUBE SET GASKET

a) Carefully remove the fuel pump and sending unit assembly from the fuel tank.

STOP **Use caution when removing to ensure the sending unit arm does not get bent.**

b) Remove gasket from the suction tube set and gauge assembly and store in a separate location so it will not be reused.
c) Install a ***NEW*** gasket onto the suction tube set and gauge assembly.
d) Reinstall the suction tube set and gauge assembly into the tank.

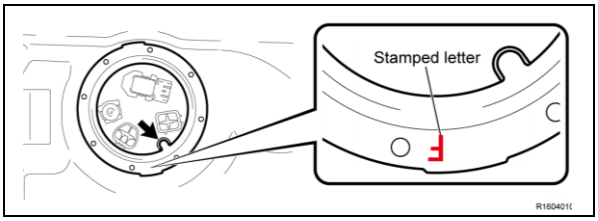

2. INSTALL *NEW* FUEL TANK VENT TUBE SET PLATE

a) Confirm that the letter "F" is tamped into the set plate.
b) Confirm that the alignment of the fuel pump matches the ***NEW*** set plate.

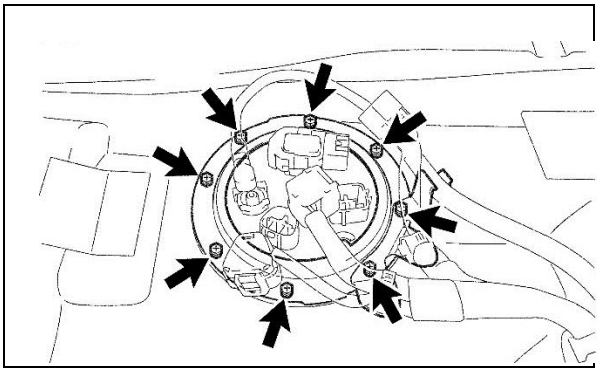

c) Install the ***NEW*** fuel tank vent tube set plate with the 8 bolts.

Torque Spec: 53in-lbs (61kgf-cm, 6.0Nm)

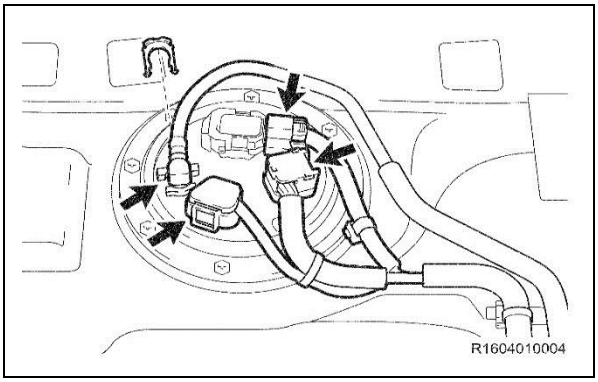

3. RECONNECT FUEL TUBES AND ELECTRICAL CONNECTORS

a) Push the fuel tube joint onto the tube plug of the suction plate sub assembly and then install the fuel tube joint clip.
b) Reconnect the fuel pump and fuel tank pressure sensor electrical connectors.

STOP

If the fuel tubes and wire harness connectors are difficult to install due to insufficient slack, this is an indication that the fuel tank was previously replaced. Confirm on TIS if the tank was previously replaced.

F. FUEL TANK REINSTALLATION

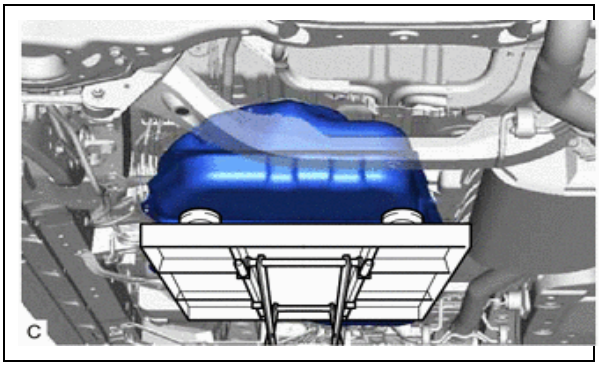

1. RAISE FUEL TANK USING TRANS JACK OR ENGINE LIFT

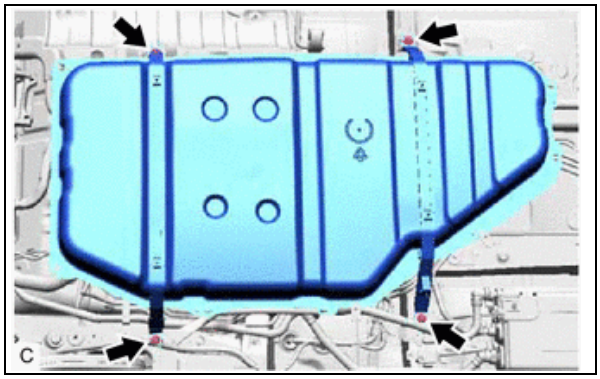

2. REINSTALL THE FUEL TANK STRAPS

a) Align the fuel tank into the proper position on the vehicle.
b) Reinstall the fuel tank straps.

Torque Spec: 29ft-lbs (400kgf-cm, 39.0Nm)

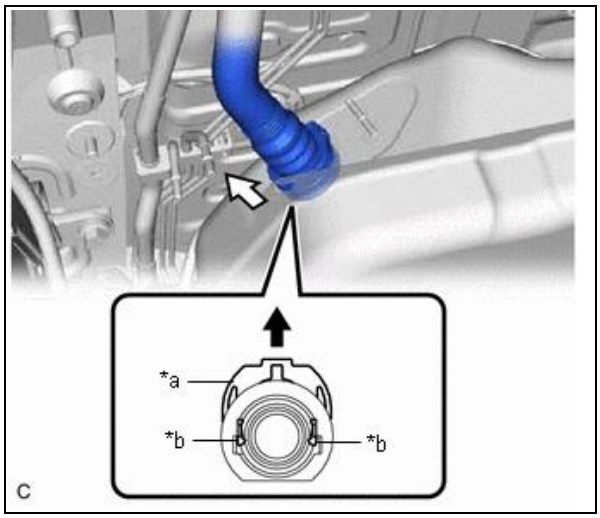

3. REINSTALL THE FUEL TANK FILLER PIPER HOSE

a) Push the fuel tank filler pipe hose onto the fuel tank.
b) Push the retainer in to engage the 2 claws.
c) Confirm that the filler pipe is securely installed.

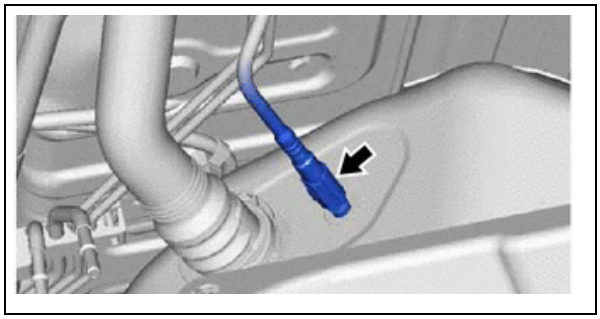

4. REINSTALL THE NO. 3 FUEL TANK BREATHER TUBE

a) Reconnect the breather tube and confirm it is securely installed.

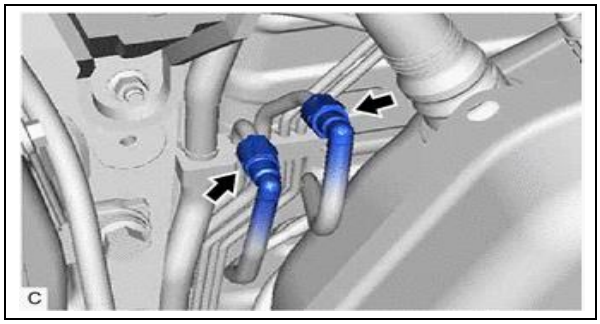

5. RECONNECT FUEL TANK MAIN TUBE ASSEMBLY

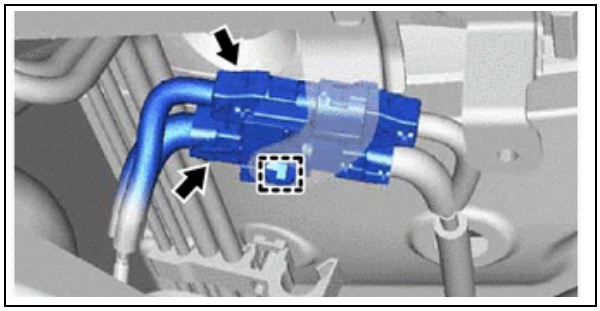

6. RECONNECT FUEL TANK WIRE HARNESS

a) Reconnect the two wire harness connectors and secure the clamp.

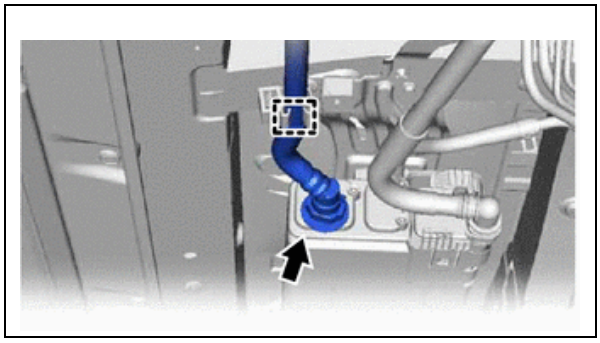

7. DISCONNECT FUEL TANK VENT HOSE

a) Reconnect the fuel tank vent hose to the charcoal canister and secure with the clamp.

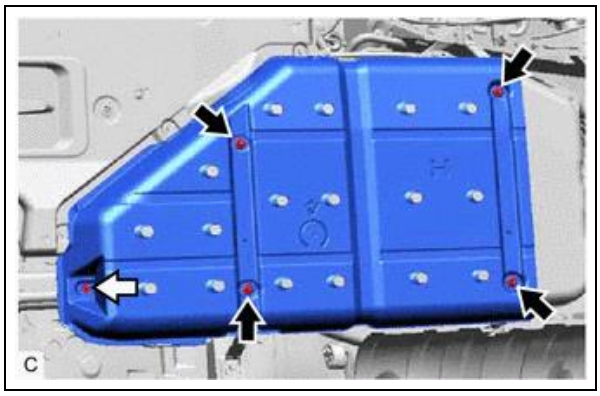

8. REINSTALL THE NO. 1 FUEL TANK PROTECTOR

a) Reengage the 4 grommets.
b) Reinstall the screw.

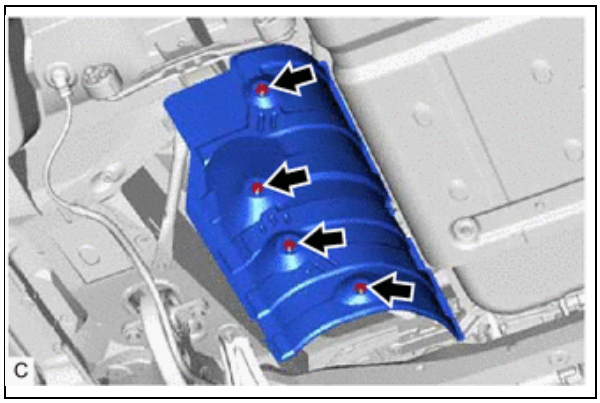

9. REINSTALL THE NO. 3 FRONT FLOOR HEAT INSULATOR

a) Reinstall the 4 nuts and floor insulator from the vehicle body.

Torque Spec: 43in-lbs (50kgf-cm, 4.9Nm)

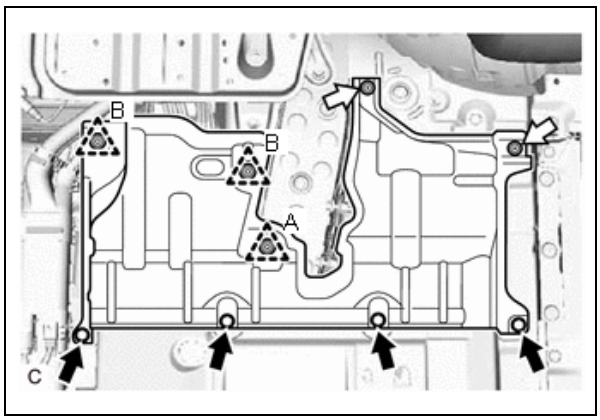

10. REINSTALL THE FRONT CENTER FLOOR COVER

a) Reinstall the cover and two screws and 4 bolts.
b) Reinstall the cover and reengage the 2 clips (B).
c) Reinstall clip (A).

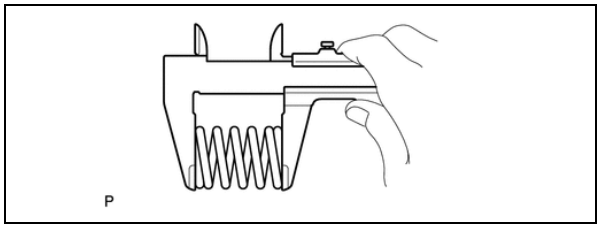

11. REINSTALL THE CENTER EXHAUST PIPE ASSEMBLY

a) Measure the free length of the exhaust compression springs.

OK Reuse: Spring length is 41.5 mm or greater

Replace: Spring length is less than 41.5 mm

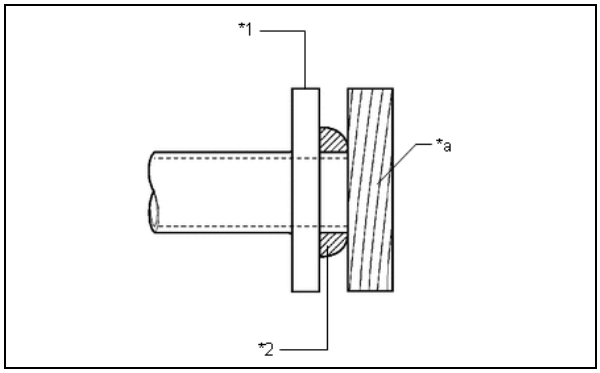

b) Temporarily install the ***NEW*** exhaust gaskets using a plastic hammer and wood block.

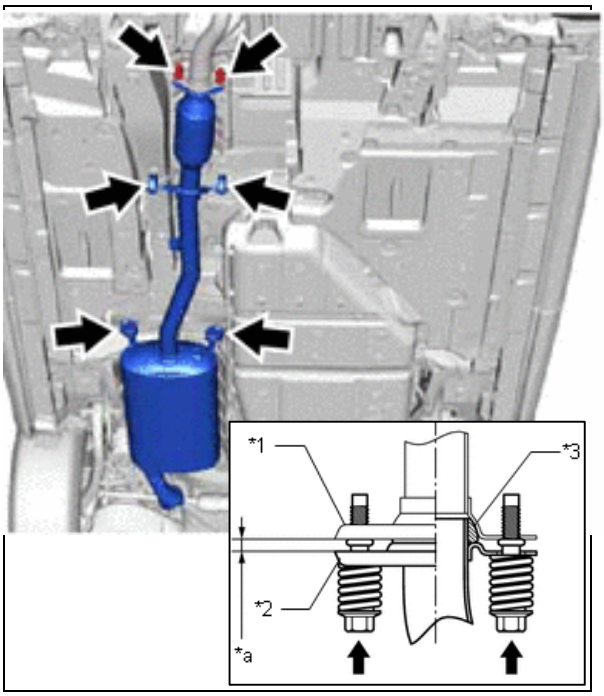

c) Rehang the center exhaust pipe assembly by connecting it to the 4 exhaust supports.
d) Reinstall the exhaust pipe to the exhaust manifold by installing the two compression springs and bolts.
e) Reinstall the center exhaust pipe assembly to the tail pipe by reinstalling the 2 compression springs and bolts.

Torque Spec: 32ft-lbs (438kgf-cm, 43Nm)

Note: Torque the bolts in multiple steps to ensure the exhaust gasket is crushed evenly.

f) Check the space between the flanges to ensure the gasket has been crushed evenly.

*1	Center Exhaust Pipe Assembly (TWC: Rear Catalyst)
*2	Tail Exhaust Pipe Assembly
*3	Exhaust Pipe Gasket
*a	Space between Flanges: 8.5 mm (0.335 in.

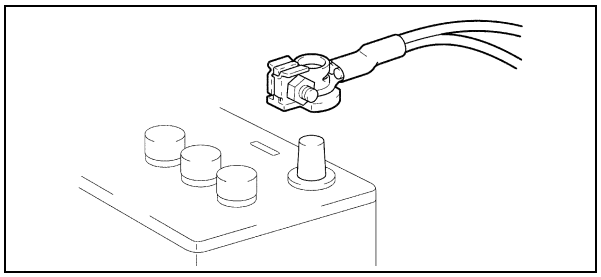

12. RECONNECT BATTERY

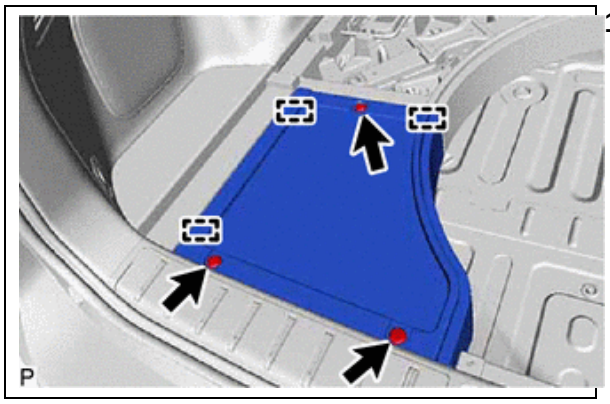

13. REINSTALL REAR DECK FLOOR BOX

a) Reinstall the rear deck floor box and install the 3 clips.
b) Reinstall the deck board assembly.

14. START VEHICLE AND CHECK FOR FUEL LEAK
15. PERFORM EVAP SYSTEM CHECK

◄ VERIFY REPAIR QUALITY ►

- **Confirm fuel tank vent tube set ring was installed**
- **Confirm there are no fuel leaks**
- **Confirm no EVAP leaks**
- **Confirm removed fuel is returned to vehicle**

If you have any questions regarding this update, please contact your area representative.