PREVOST

# *Instruction Sheet* IS-16900B

## Driver's Partition and Door Installation

### 2016 model year H series coaches

| | |
|---|---|
| REVISION: **B**: | **THIS INSTRUCTION SHEET SUPERSEDES PREVIOUS VERSION** |
| Feb 04, 2016: Step 36: flipped image to represent hardware & panel stack-up correctly. | |

## MATERIAL

Kit #200668-1P includes the following parts:

| CAD Drawing Item | Part No. | Description | Image | Qty |
|---|---|---|---|---|
| - | *D320002* | *PARTITION, DRIVER'S INST. DRAWING* | - | - |
| 1 | 320948 | PROTECTOR, DRIVER'S, TRANSPARENT | 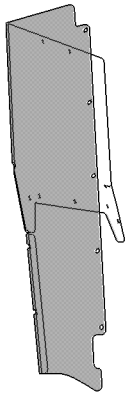 | 1 |
| 2 | 320951P | POST ASSEMBLY W/ HINGES | | 1 |
| 3 | 321273 | BRACKET, POST, UPPER | 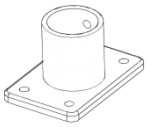 | 1 |
| 4 | 329586 | SUPPORT, PROTECTOR, UPPER | | 1 |

| | | | | |
|---|---|---|---|---|
| 5 | 400064P | DOOR, DRIVER'S PARTITION ASSEMBLY W/ MALE & FEMALE CATCH. | | 1 |
| 6 | 502643 | SCREW MA PAN PH Z050 8/32X1 1/4 | 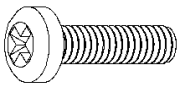 | 2 |
| 7 | 321287 | BRACKET, POST, LOWER | 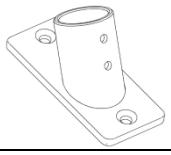 | 1 |
| 8 | 500855 | WASHER FL N500 .188X.438X.049 | | 17 |
| 9 | 504399 | SNAP CAP WASHER, # 10 SCREW | 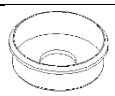 | 21 |
| 10 | 500805 | WASHER FL N500 7/32X7/8X.062 | | 16 |
| 11 | 321133 | PAD | | 1 |
| 12 | 900251 | BUSHING, PARTITION MOUNTING | | 30 |
| 13 | 504400 | CAP TRIM, BLACK 12GA. SCREW | 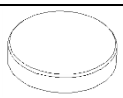 | 21 |
| 14 | 5001317 | SCREW MA PAN PH SS 8-32X1 | 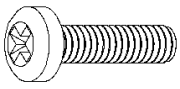 | 2 |
| 15 | 500436 | SCREW TP OV PH Z050 #10X2 | 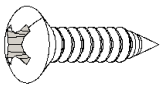 | 5 |
| 16 | 505539 | SPACER 13 X 8 OD X 5.3 ID | | 16 |
| 17 | 5001315 | SCREW CAP HEX SS 1/4-20X1 | 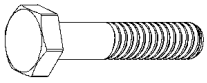 | 4 |
| 18 | 329665 | TUBE SLEEVE | 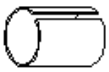 | 2 |
| 19 | 500626 | SCREW TP OV PH Z050 #8X3/4 | 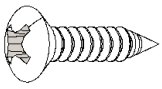 | 2 |
| 20 | 500464 | WASHER FN CKF .220X 0.615 | 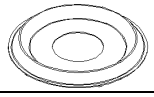 | 2 |
| 21 | 500035 | WASHER LOCK SPLIT .317x.586x.078 SS | | 2 |

| | | | | |
|---|---|---|---|---|
| 22 | 5001852 | NUT HEX SS NSS M8-1.25 | | 2 |
| 23 | 320995 | SUPPORT, PARTITION ASSY | 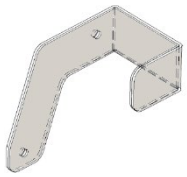 | 1 |
| 24 | 329671 | DECAL, BLACK DRIVERS GATE | | 1 |
| 25 | 500637 | SCREW TP PAN PH Z050 #8X1 1/2 | 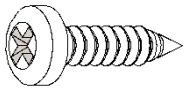 | 7 |
| 26 | 500764 | NUT HEX Z050 8-32 | | 2 |
| 27 | 406192 | BRACKET, DOOR LOCK | 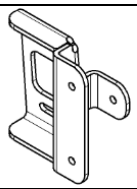 | 1 |
| 28 | 500964 | WASHER FL Z050 .203X.500X.047 | | 4 |
| 29 | 500387 | SCREW MA RND PH Z050 10-24X3/4 | 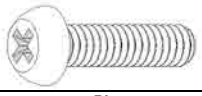 | 2 |
| 30 | 500767 | NUT HEX NYRT Z050 10-24 | 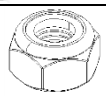 | 2 |
| 31 | 5001783 | SCREW CAP HEXS SS M6-1.0 X 12 FT | 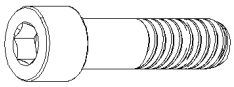 | 4 |
| 33 | 500641 | SCREW TP BDG PH Z050 #8X3/4 | 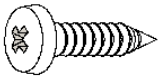 | 3 |
| 34 | 5001461 | SCREW MA FL PH SS M8-1.25X40 FT | 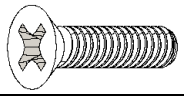 | 2 |
| 35 | 502634 | SCREW SET HEXS CUP M6-1.0X6 | | 3 |
| 40 | 270052 | BACKING BRACKET, UPPER POST | 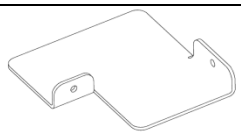 | 1 |
| 41 | 5001697 | SCREW CAP HEX SS NSS M6X16 | 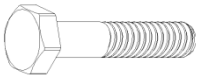 | 1 |
| 42 | 502860 | NUT HEX STOVER N500 M6-1.0 | | 3 |
| 43 | 5001315 | SCREW CAP HEX SS 1/4-20X1 SS | 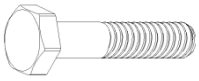 | 1 |
| 45 | 5001681 | SCREW CAP HEX SS M6-1 X 60 LG. PT | 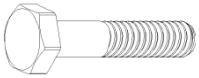 | 2 |

| | | | | |
|---|---|---|---|---|
| 46 | 320952 | BACKING PLATE, POST BASE | 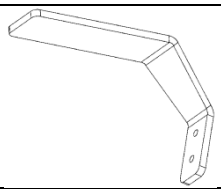 | 1 |
| - | 400177 | SUPPORT, MIRROR | 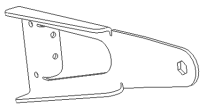 | 1 |
| - | 509805 | SCREW, TAPPING PAN PH #10x1/2 BLACK | 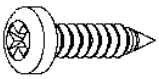 | 8 |
| | IS-16900 | Instruction Sheet | | 1 |

Other parts that may be required:

| Part No. | Description | Qty |
|---|---|---|
| 680038 | LOCTITE 243, 50 ML | |

| |
|---|
| *NOTE* |
| *Material can be obtained through regular channels.* |

## PROCEDURE

**DANGER**

Park vehicle safely, apply parking brake, stop engine. Prior to working on the vehicle, set the ignition switch to the OFF position and trip the main circuit breakers equipped with a trip button. On Commuter type vehicles, set the battery master switch (master cut-out) to the OFF position.

| |
|---|
| *NOTE* |
| As a general guideline, **use Loctite 243 on all threads** *except* on hardware having *Stover type nuts*. |

| |
|---|
| *NOTE* |
| Prior to starting work, protect the LCD monitor, vehicle flooring around the aisle and steps as well as the driver's seat. Do not peel protecting paper off until the end of the procedure. |

## Procedure overview.

A reference CAD drawing is available at the end of this document.

We will start by removing the fore roof panel to remove an insulation section and get access to the roof structure. We will also move the driver's seat aside.

Then we will proceed to the installation of the upper and lower post structural reinforcements.

Once this is completed, we will install the post assembly and transparent protector panel, rear of the driver's seat.

Next, we will install the door on the post assembly and the catch curb side of the aisle.

Finally, the center mirror will be moved higher with a new bracket.

**FIGURE 1 : COMPLETE INSTALLATION OVERVIEW**

1. Remove trimming, parcel rack doors and gas springs to allow removal of carpet ceiling.
2. Remove the first section of carpet ceiling.

**FIGURE 2**

3. Cut a section of the foam insulation road side, next to the monitor.

   Remove about 16in wide to create working space for drilling.

**FIGURE 3**

4. Install the upper post support #**270052**. Refer to Figure 4 for bracket orientation.

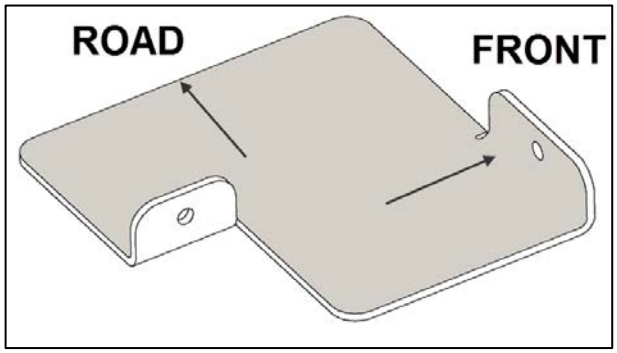


**FIGURE 4**

5. Install bracket #**270052** as shown in fig. 5. Clamp the bracket on the longitudinal roof channel.
6. Adjust bracket to have bottom face flush (tangent) with the transversal roof curve. We want to avoid any warping of the carpet ceiling section once post support is installed.
7. On the front transverse member, drill 7/32” and tap 1/4-20 using a thread cutting screw or tapping tool. Assemble with:

   **#5001315** Hex cap screw 1/4-20 x 1
8. On the longitudinal member, drill 7/32”. Assemble with:

   **#5001697** Hex Cap screw, M6 X 16

   **#502860** Stover nut, M6
9. Place a masking tape on the neighboring roof section and outline bracket location with a marker pen.
10. Remove driver seat base mounting bolts and move the driver’s seat road side.

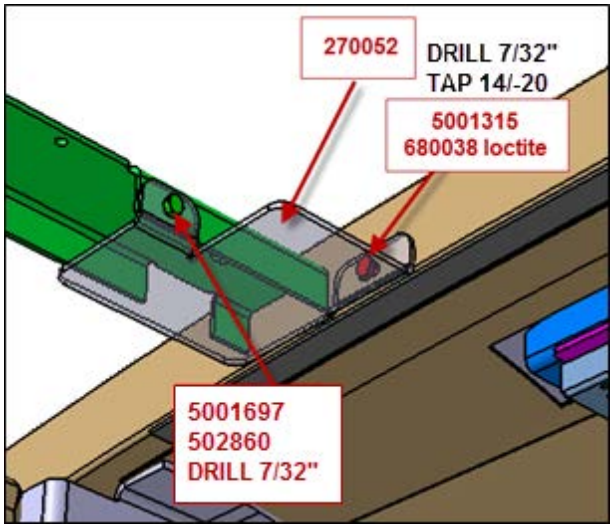


**FIGURE 5**

11. Remove the aisle step road side fiber cap located alongside the driver's seat.

Enlarge the existing trimming as shown in fig. 6

**FIGURE 6**

Step preparation.

12. Drill 1/4” in tube using bracket #320952 as a drilling template.

    Assemble with 2x **#5001681** M6 x 60mm lg screw and 2x **#502860** M6 Stover nut.

    Tighten to

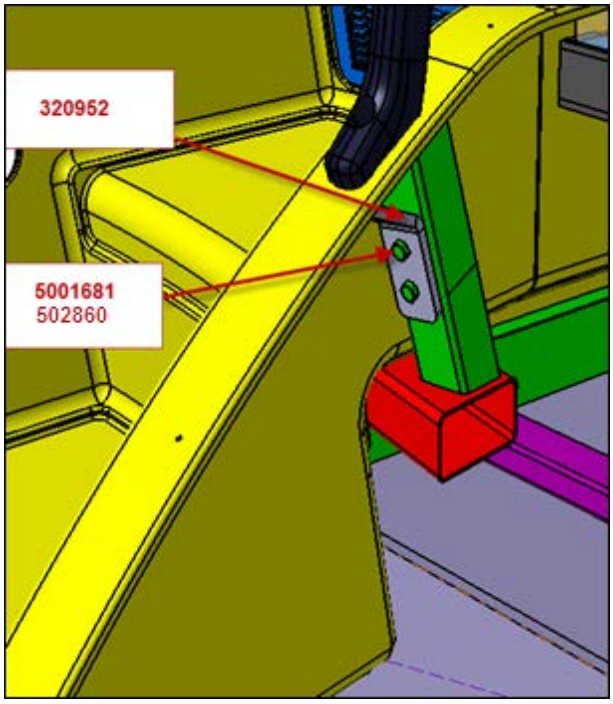


**FIGURE 7**

**FIGURE 8**

Protector preparation

13. Install a band of black decal **#329671** in the inside corner of the transparent protector.

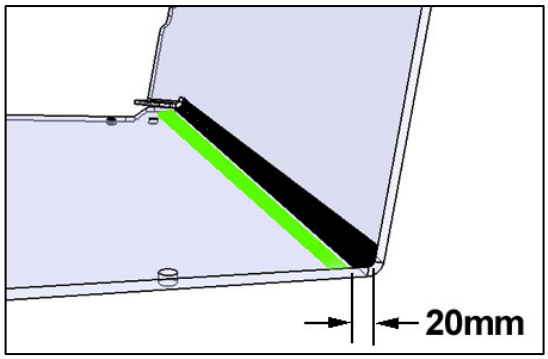


**FIGURE 9**

14. Pre-install rubber bushings **#900251** (2 / hole) in each hole on the protector.

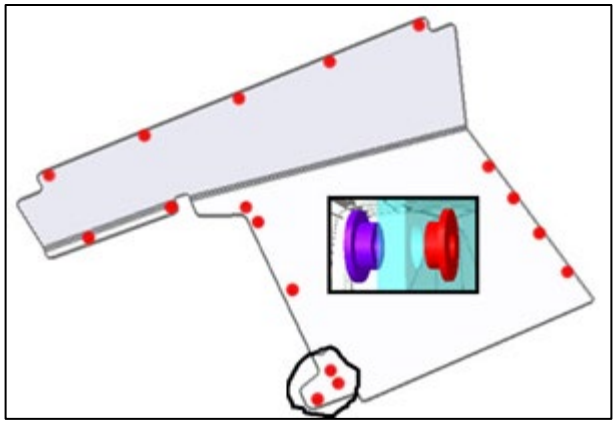

**FIGURE 10**

15. Place support **#320995** on modesty panel..

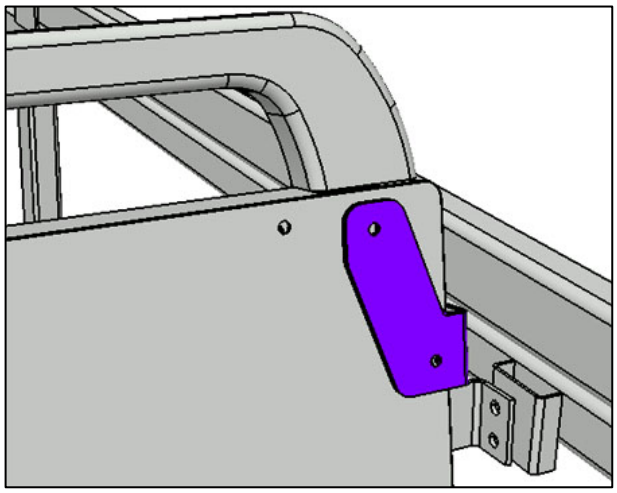

**FIGURE 11**

Protector installation: two team members are required.

16. Move protector in place and use a center punch to locate holes.
17. Install with the following hardware

**#505539** Bushing

**#500805** Flat washer, 7/8" OD

**#504399** Snap cap washer

**#500855** Flat washer, 7/16" OD

**#500637** #8 Pan head screw 1 ½" lg

**#504400** Cap

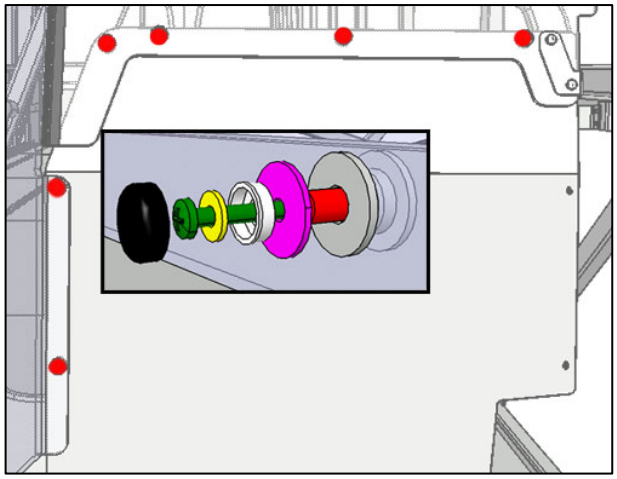

**FIGURE 12**

18. Use following hardware on the support

    **#500805** Flat washer, 7/8” OD

    **#504399** Snap cap washer

    **#500855** Flat washer, 7/16” OD

    **#500637** #8 Pan head screw 1 ½” lg

    **#504400** Cap, black

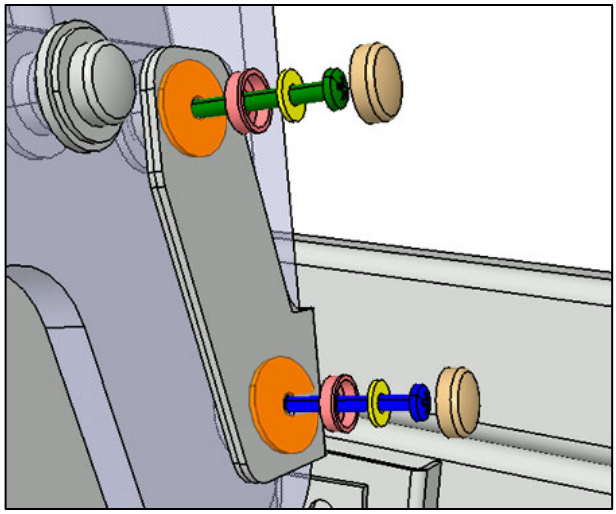

**FIGURE 13**

19. Insert sleeve **#329665** inside lower post bracket **#321287** and upper post bracket **#321273.**

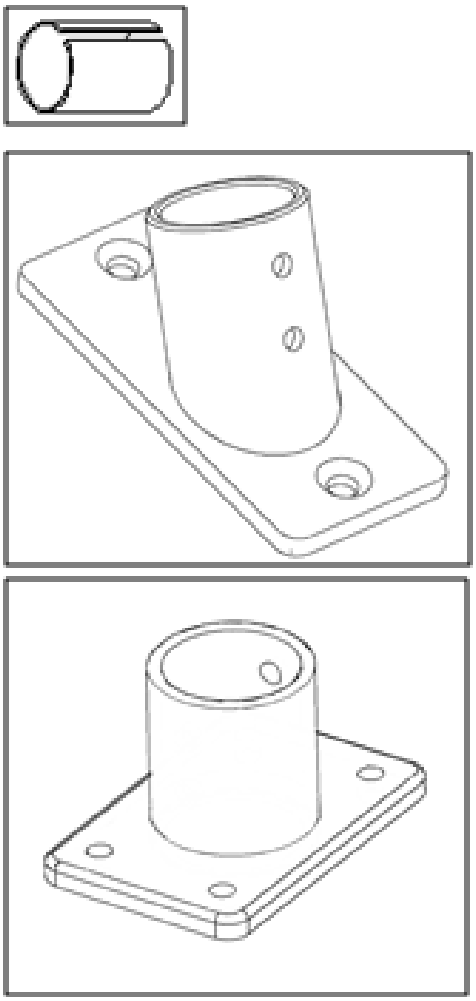

**FIGURE 14**

20. Slide post assembly **#320951P** in the bases.

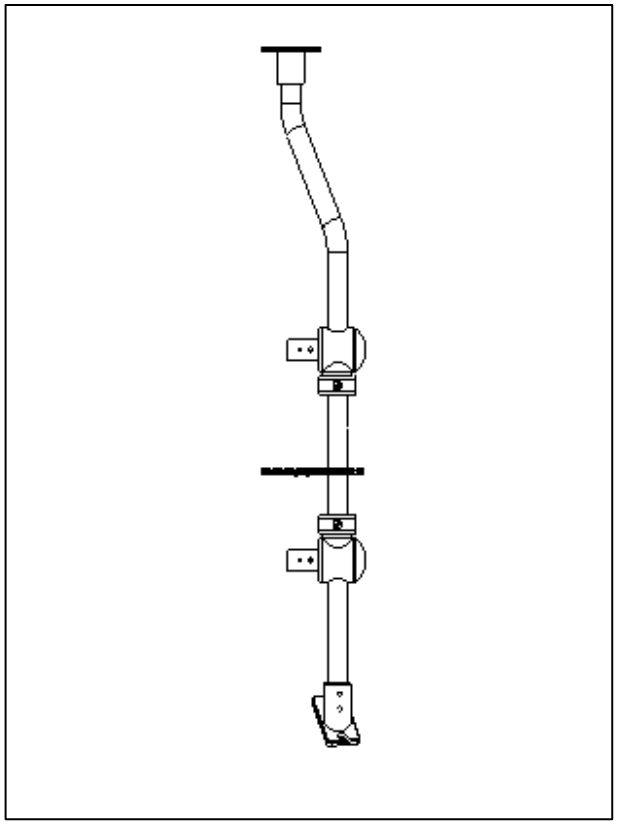

**FIGURE 15**

21. Secure the transparent protector to the post.

    Use the following hardware:

    **#505539 (5X)** Bushing

    **#500805 (5X)** Flat washer, 7/8” OD

    **#504399 (5X)** Snap cap washer

    **#500855 (5X)** Flat washer, 7/16” OD

    **#500436 (5X)** #10 Oval head Screw 2” lg

    **#504400 (5X)** Cap, black

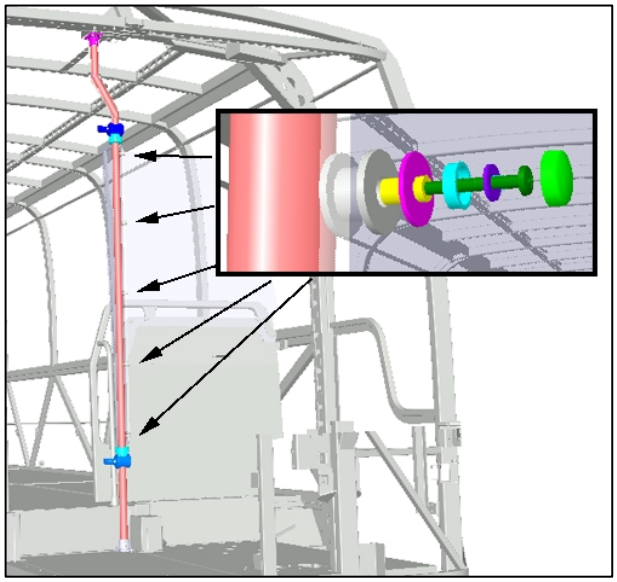

**FIGURE 16**

22. Locate the lower section of the post.
23. Drill 8mm holes using post base as template.
24. Place rubber pad **#321133** under post.
25. Install with the following hardware:
    **#5001461** Screw, flat head M8 x 40mm lg
    **#500035** Washer lock split 0.586 in OD
    **#5001852** Nut, M8

**FIGURE 17**

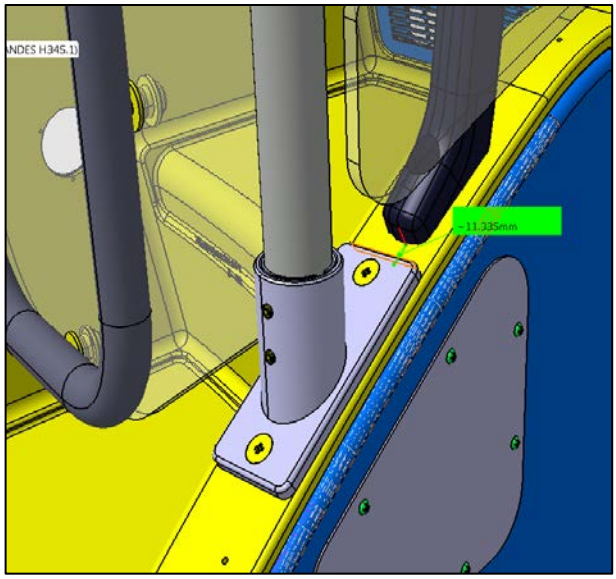


**FIGURE 18**

Two team members are required.

26. Reinstall carpet roof section.

**FIGURE 19**

27. Locate upper post. Use a level.
28. Also allow clearance for the opening of the parcel rack door.
29. Drill 7/32" using post base as a template. **Place a drill stop at 40mm (1 ½") to avoid drilling through roof.**
30. Tap 1/4-20.
31. Use loctite 243 **#680038**
32. Install **#5001315** (4x) 1/4-20 x 1 SS screws.

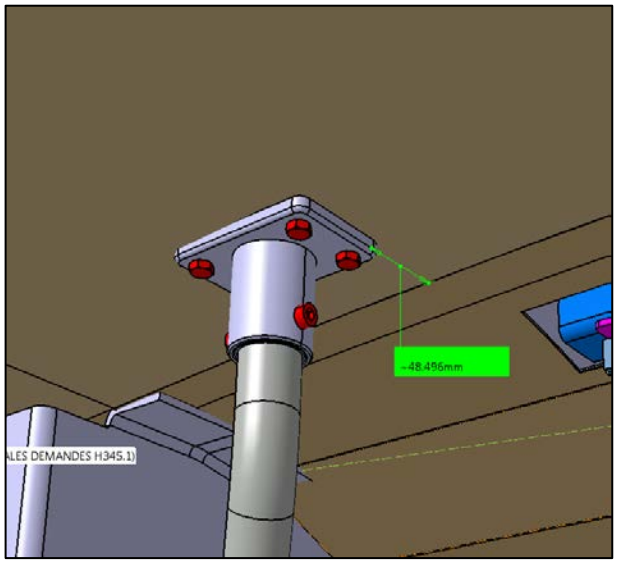


**FIGURE 20**

33. Install **#329586** upper protector support
34. Drill 1/8”
35. Install with the following hardware:

    **#500464** (2X) Countersink washer

    **#500626** (2X) Oval head screw #8 x 3/4

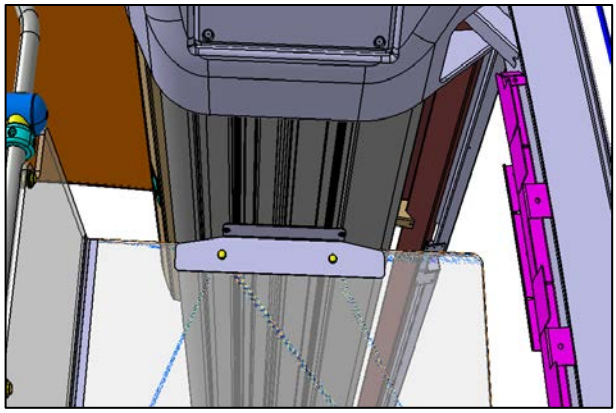

**FIGURE 21**

36. Secure protector to panel with the following hardware:

    **#900251** (4X) Rubber bushing

    **#504400** (4X) Cap, black

    **#500805** (2X) Flat washer, 7/8” OD

    **#504399** (4X) Snap cap washer

    **#505539** (2X) Bushing

    **#5001317** (2X) Pan head screw 8-32 x 1

    **#500764** (2X) Hex nut 8-32

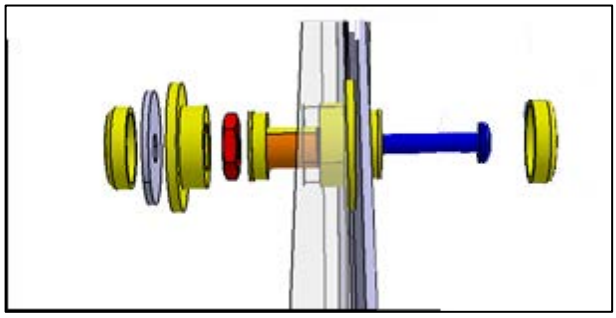

**FIGURE 22**

37. Install door on the post hinges. Confirm proper alignment of holes, drill if required. Use following hardware:

    **#900251** (2X) Rubber bushing

    **#505539** (2X) Bushing

    **#500805** (2X) Flat washer, 7/8” OD

    **#504399** (2X) Snap cap washer

    **#500855** (2X) Flat washer, 7/16” OD

    **#680038** Loctite 243

    **#502643** (2X) Pan head screw 8-32 x 1 1/4.

    **#504400** (2X) Cap, black

    **#680038** Loctite

    **#5001783**(2X) SHCS M6 x 12mm

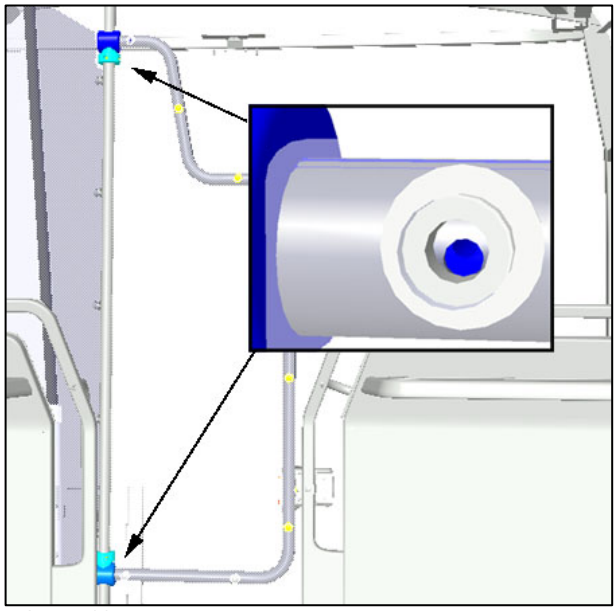

**FIGURE 23**

**Lower hinge only**

38. Unscrew the three set screws.
39. Re-install set screws with Loctite 243.

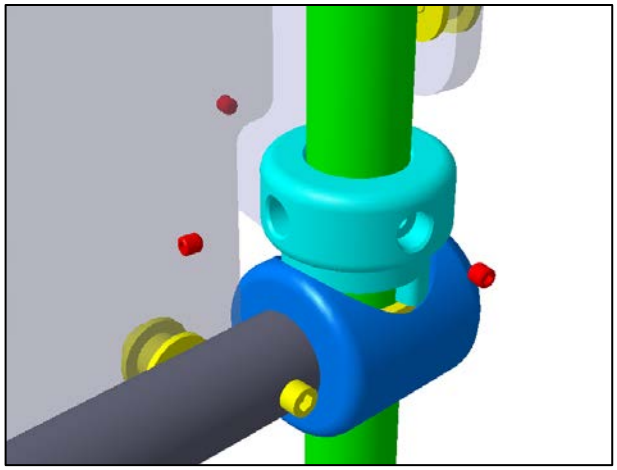

**FIGURE 24**

40. Upper post securement. Use the following hardware:

    **#5001783** (2X) SHCS M6 x 12mm

    **#680038** Loctite

    **#502634** (1X) Set screw M6 x 6mm

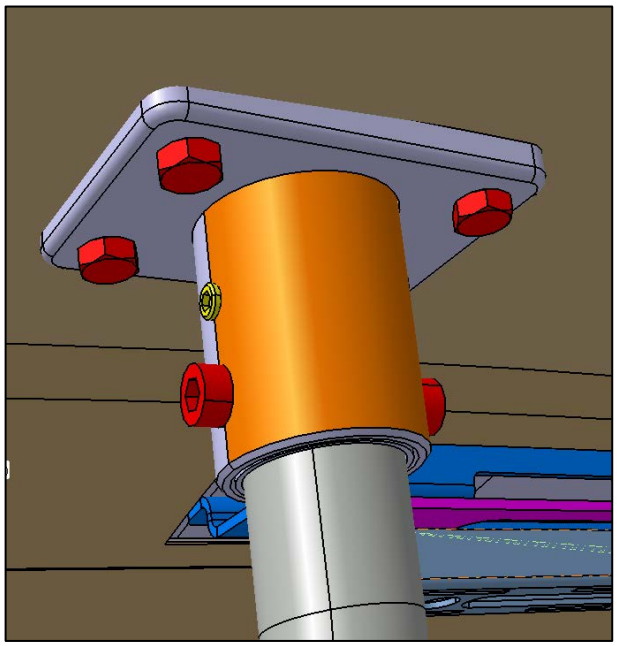

**FIGURE 25**

41. Lower post securement. Use the following hardware

    **#680038** Loctite

    **#502634** (2X) Set screw M6 x 6mm

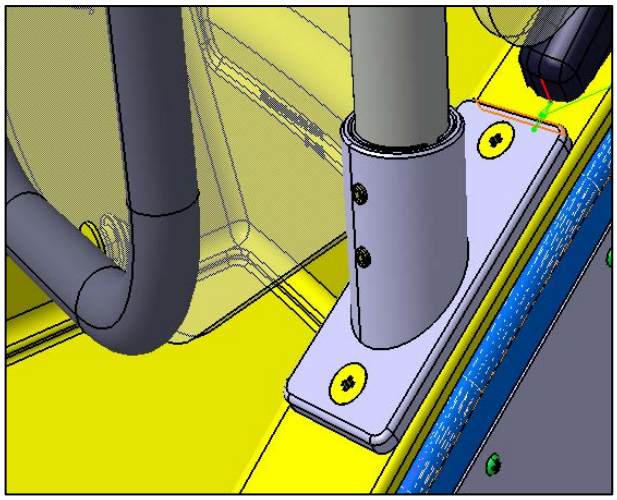

42. Door should not turn open by its own upon a sudden stop. Adjust pressure balls if required.

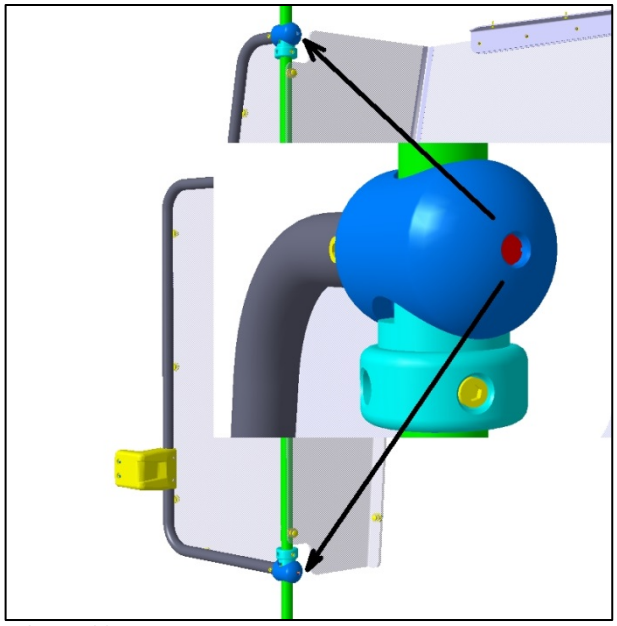

**FIGURE 26**

43. Catch assembly. Do not tighten yet!

    **#406192** (1X) Catch support

    **Female catch** (comes with door assembly)

    **#500964** (4X) Washer 0.500 OD

    **#500767** (2X) Nut 10-24

    **#500387** (2X) Screw, 10-24 x 3/4

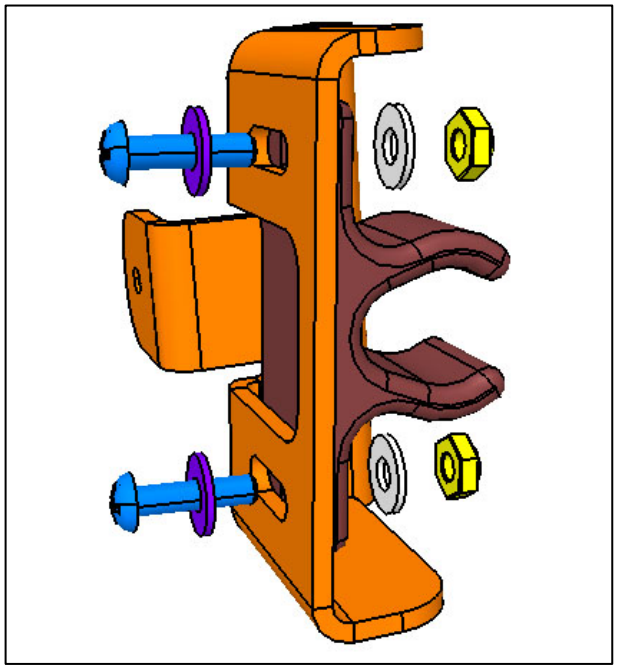

**FIGURE 27**

44. Close the door and align female catch.
45. Drill 1/8”
46. Assemble on handrail with following hardware:

    **#504399** (3X) Snap cap washer

    **#500855** (3X) Flat washer, 7/16” OD

    **#500641** (3X) Screw, #8 x 3/4

    **#504400** (3X) Cap, black

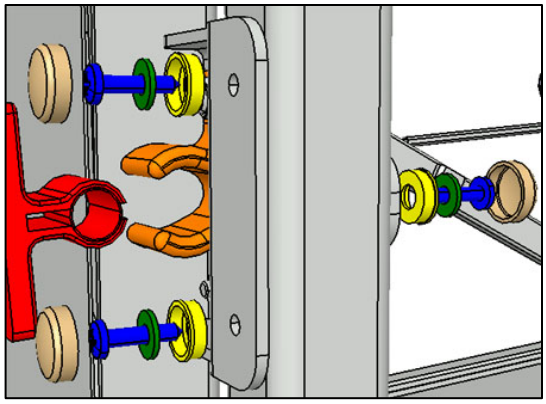

**FIGURE 28**

47. Close door.
48. Tighten the female catch assembly.

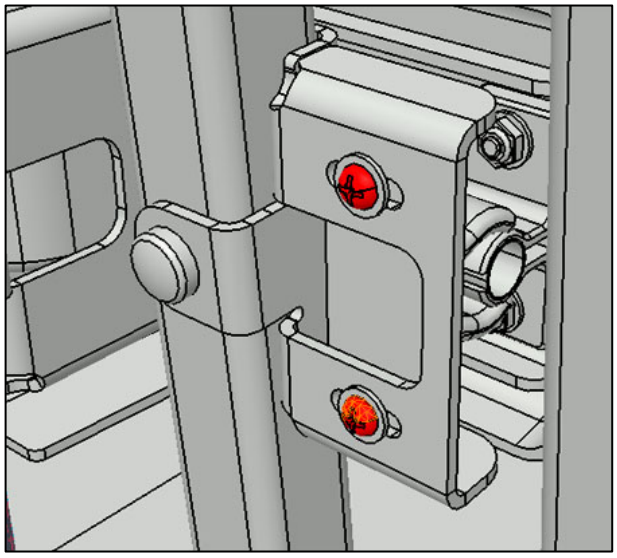

**FIGURE 29**

49. Door should be open with a force of 50 to 55 pounds.
50. Turn adjusting screw accordingly.

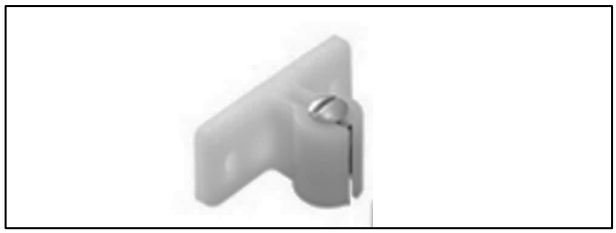

**FIGURE 30**

Move center mirror position further up.

51. Dismount and discard original bracket.
52. Fill former holes with:

    **#509805** (4X) Tapping screw #10 x 1/2 lg

53. Replace by new bracket **#400177.**

54. Drill 1/8" holes using bracket as template. Install with:

    **#509805** (4X) Tapping screw #10 x 1/2 lg

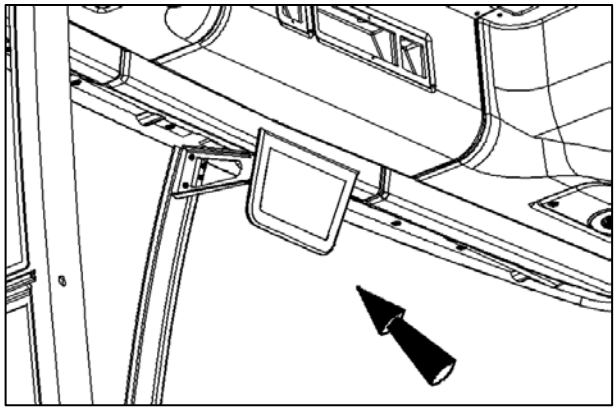

**FIGURE 31**

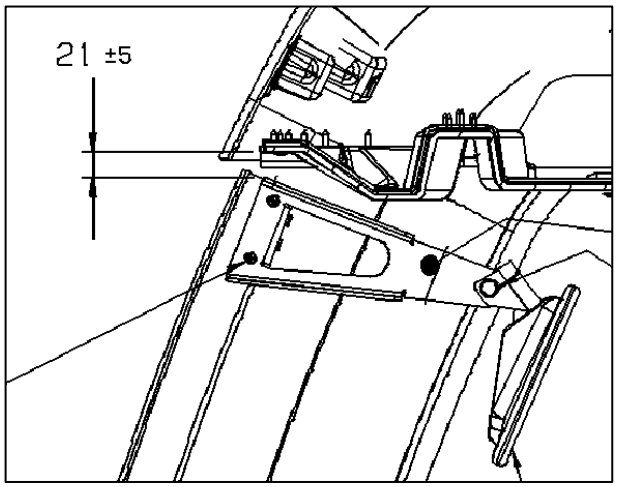


**FIGURE 32**

55. Move the infrared sensor in this location, under the new mirror bracket.

**FIGURE 33**

56. Peel protecting paper off the panel and door.

## PARTS / WASTE DISPOSAL

Discard waste according to applicable environmental regulations (Municipal/State[Prov.]/ Federal)

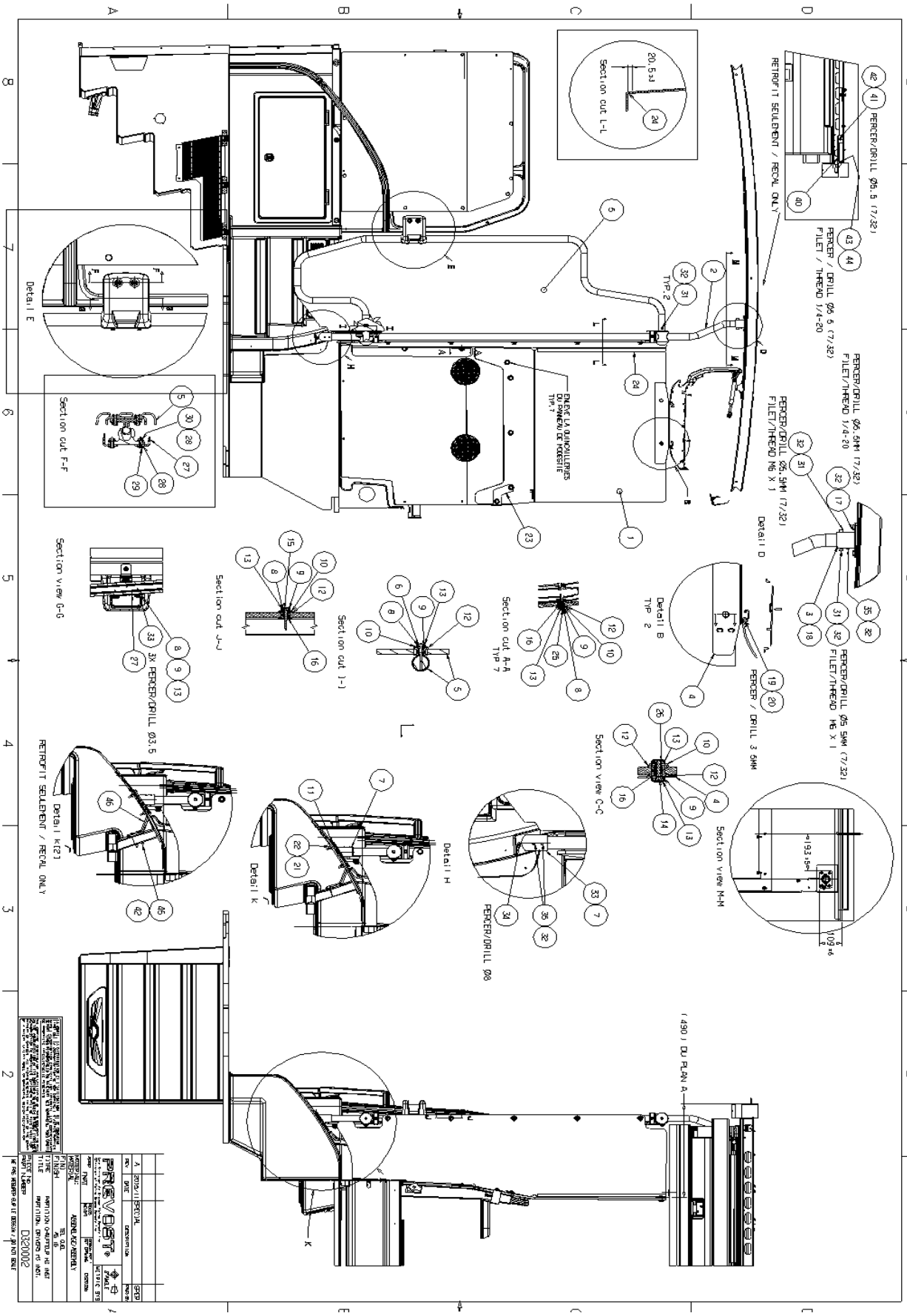
PERCER/DRILL Ø5.5 (7/32)
RETROFIT SEULEMENT / RECAL ONLY
PERCER / DRILL Ø5.5 (7/32)
FILET / THREAD 1/4-20
PERCER/DRILL Ø5.5MM (7/32)
FILET/THREAD 1/4-20
PERCER/DRILL Ø5.5MM (7/32)
FILET/THREAD M6 X 1
PERCER/DRILL Ø5.5MM (7/32)
FILET/THREAD M6 X 1
PERCER / DRILL 3.5MM
Section cut L-L
Detail E
Section cut F-F
Detail D
Detail B
TYP 2
Section cut A-A
TYP 7
Section cut I-I
Section cut J-J
Section view G-G
3X PERCER/DRILL Ø3.5
Section view C-C
Section view M-M
Detail H
Detail K
Detail K[2]
RETROFIT SEULEMENT / RECAL ONLY
PERCER/DRILL Ø8
(490) DU PLAN A
CONFIDENTIEL / CONFIDENTIAL
PREVOST
D320002