VOLVO CAR
SERVICE AND PARTS BUSINESS

Technical Journal

TITLE:

Fresh air hose loose from air filter housing

REF NO:	ISSUING DEPARTMENT:	CAR MARKET:
TJ 31319.2.0	Technical Service	United States and Canada

PARTNER:	ISSUE DATE:	STATUS DATE:
3 US 7510 Volvo Car USA	2016-04-12	2016-06-22

FUNC GROUP:	FUNC DESC:	
2560	Air cleaner and throttle housing	Page 1 of 3

"Right first time in Time"

Attachment

File Name	File Size
TJ31319.jpg	0.0582 MB

Vehicle Type

Type	Eng	Eng Desc	Sales	Body	Gear	Steer	Model Year	Plant	Chassis range	Struc Week Range
256	10	B4204T23					2016-2016	21	-	201537-201610

CSC Customer Symptom Codes

Code	Description
1Q	Driving/Poor performance/lacks power/At take off
AJ	Driving/Poor performance/lacks power
DL	Warning lights and chimes/Malfunction Indicator Light ("Check engine" light) indication/no indication

VST Operation Number

VST Operation Number	Description
99400-2	Exchange clamp

Produced in the USA and available as an electronic document. Hard copy documents are printed in USA on recycled paper containing a minimum of 50% wastepaper and 10% post-consumer waste.
© 2016 VOLVO CAR USA, LLC

DTC Diagnostic Trouble Codes

Control Module	Code	Fault Type
ECM	P226200	Permanent
ECM	P02CD00	Permanent
ECM	P200200	Permanent

Text

DESCRIPTION:

*Structure week changed under vehicle type

Note!
If using a printed copy of this Technical Journal, first check for the latest online version.
DTC= DiagnosticTrouble Code
MAF= Mass Air Flow Sensor
ECM=Engine Control Module

If the “check engine” indicator is lit and ECM-P226200 and/or ECM-P02CD00 is posted, this can be caused by loose fresh air hose at MAF sensor.

ECM-P200200 may be posted as a consequential failure.

Please follow advice under service.

SERVICE:
If fresh air hose is loose from air filter housing, install spring clamp P/N 988016 to prevent repeat repair.
Tightening torque 4 Nm.
See attachment.

VEHICLE REPORT:
Yes, please submit a Vehicle Report if the service solution described in this TJ has no effect. Use concern area “Vehicle Report” and sub concern area “Support not needed”, use function group 2560.

To view TJ attachment continue to next page. This TJ has one attachment.

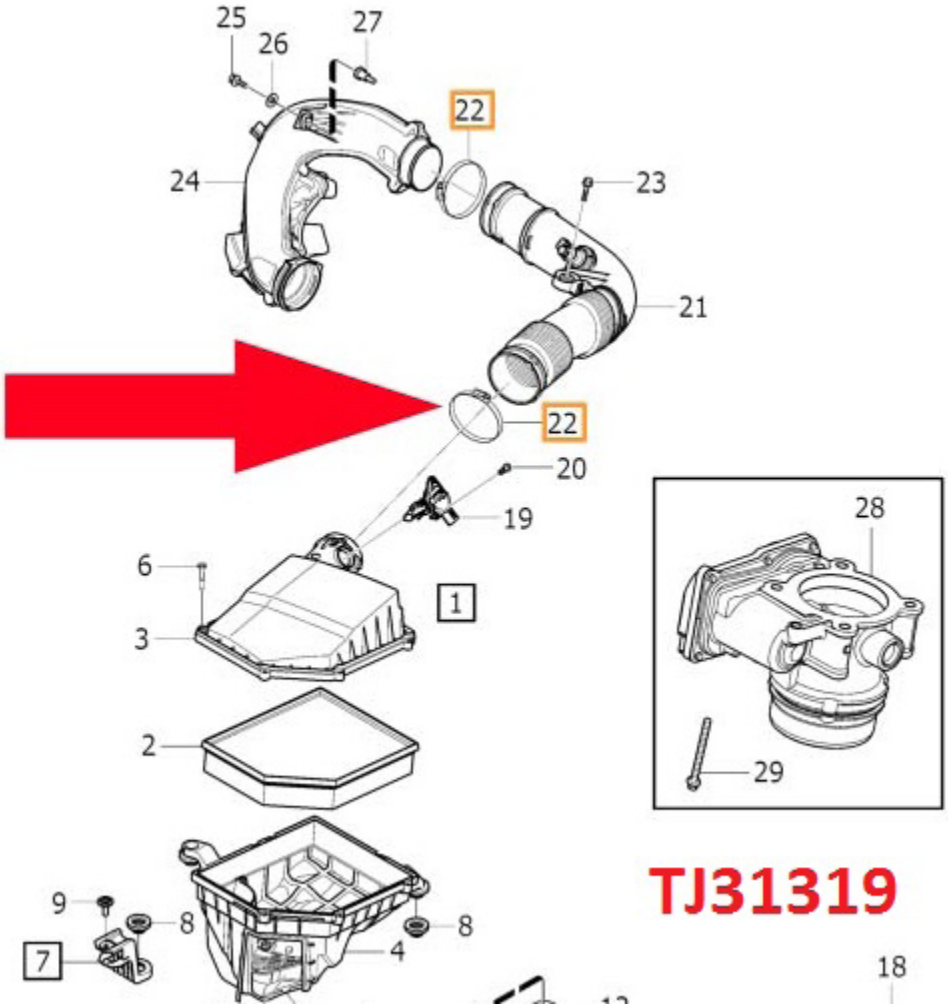
25
26
27
22
24
23
21
22
20
19
28
6
1
3
2
29
TJ31319
9
8
8
7
4
18