NOVA BUS

SERVICE BULLETIN BS3855E

REFERENCE:	Nova Bus Manuals
SECTION:	18: Articulation Hinge
RS Nº:	MQR 7621-398
EFFECTIVE IN PROD.:	L729 (2013MR)

APPLICATION DEADLINE: 2017DE31
CLAIM REFERENCE NUMBER: WB-3855

SUBJECT:	Energy Guidance System (EGS)
JUSTIFICATION:	Installation of a new and improved EGS.

LEVEL	DESCRIPTION	DIRECT CHARGES		TIME
		LABOUR	MATERIAL	
1	Replace the EGS	Nova Bus	Nova Bus	6h30
2	–	–	–	–

MATERIAL

QTY	PART Nº	REV.	DESCRIPTION	REPLACES PART N°
LEVEL 1				
1	N8901212	–	Guiding Profile	N45785
1	N8903785	–	Energy Guidance System	N40762 / N68020
LEVEL 2				
–	–	–	–	–

To order, please contact Prevost Parts by phone at 1-800-771-6682, by fax at 1-888-668-2555 or by email at prevostparts.commandes@volvo.com. Specify document number, quantity of parts required and shipping address.

DISPOSAL OF PARTS

REMOVED PARTS ARE:	DISCARDED *	RETAINED	* Dispose of the unused parts and the defective parts in accordance with local environmental standards in effect.
	Yes	–	

REVISION HISTORY

REV.	DATE	CHANGE DESCRIPTION	WRITTEN BY
NR	2017NO21	Initial release	André Pelletier

APPROVED BY: Daniel Theriault

Digitally signed by Daniel Theriault
DN: cn=Daniel Theriault, o=Nova Bus, ou, email=daniel.theriault@volvo.com, c=CA
Date: 2016.11.30 14:46:33 -05'00'

CLIENT	ORDER	ROAD NUMBER		VIN (2NVY/4RKY...)		QTY
		FROM	TO	FROM	TO	
Clemson Area Transit - South Carolina	L617	—	—	S92U5C4500002	S92U5C4500002	1
Niagara Falls - Ontario	L652	—	—	S92U3C3000607	S92U6C3000617	11
Niagara Parks Commission - Ontario	L685	—	—	S92U9C3000644	S92U8C3000652	9
Saskatoon - Saskatchewan	L359	—	—	S92U583000289	S92U583000289	1
Saskatoon - Saskatchewan	L551	1005	1007	S92UXA3000178	S92U8A3000180	3
Saskatoon - Saskatchewan	L568	—	—	S92U9B3000013	S92U9B3000013	1
Saskatoon - Saskatchewan	L618	—	—	S92U1C3000377	S92U1C3000377	1
University of Colorado - Colorado	L427	—	—	S92U693000027	S92U693000027	1
University of Colorado - Colorado	L428	—	—	S92U893000028	S92U893000028	1
University of Colorado - Colorado	L627	—	—	S92UXB4000139	S92U6B4000140	2
York Regional Transit - Ontario	L562	1080	1082	S92U2A3000420	S92U6A3000422	3
York Regional Transit - Ontario	L572	1083	1094	S92U3A3000569	S92U2A3000580	12

WARNING

Follow your internal safety procedures.

WARNING

Before starting any work on the vehicle, make sure the vehicle is in a completely straight position and securely stationary. Disconnect the starting circuit on the control box at the rear of the vehicle and place the battery disconnect switches in the OFF position.

NOTE

Retain hardware removed during the procedure for later reinstallation.

PROCEDURE

1.1. Remove the ceiling cover from the articulation system.

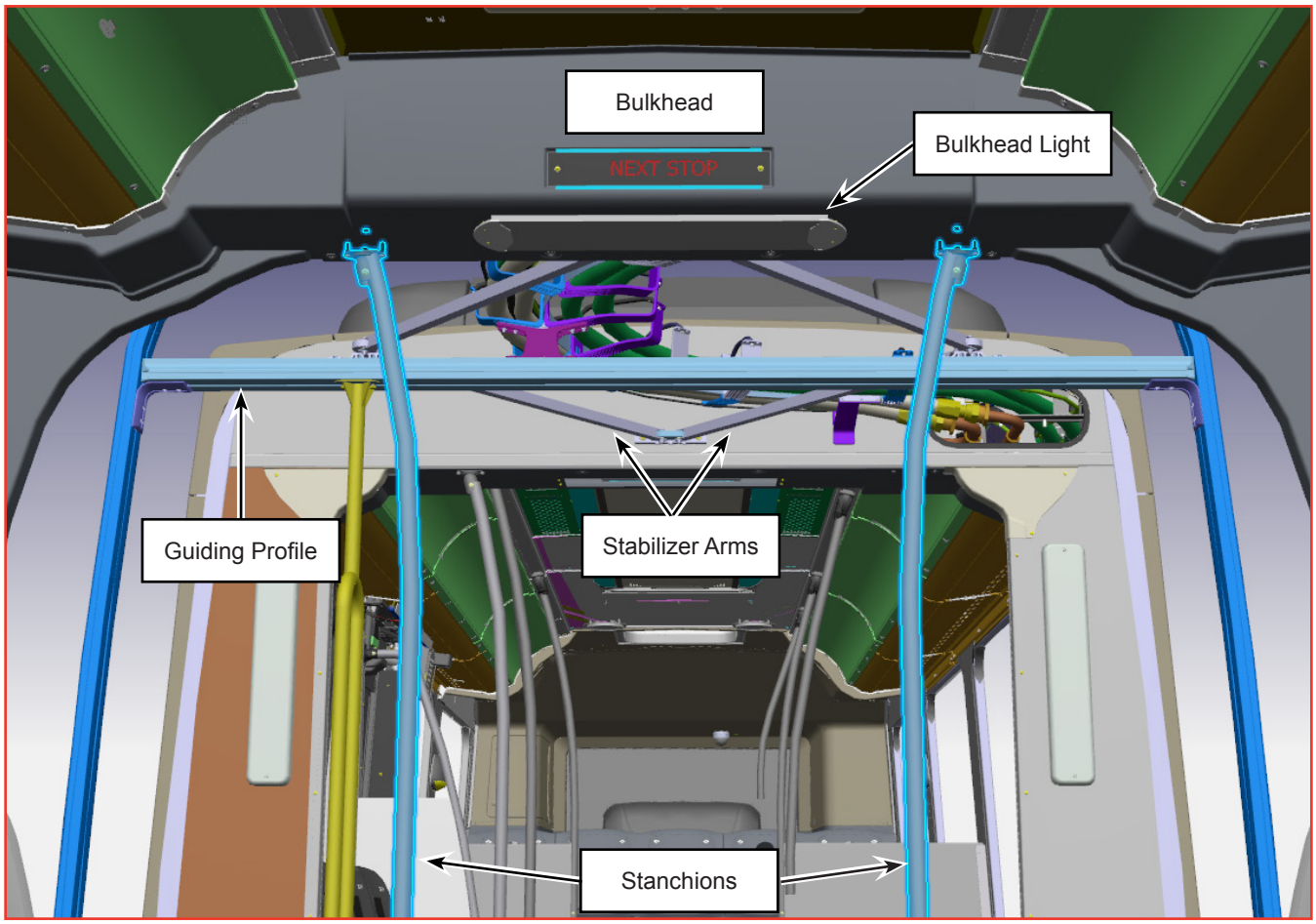

Figure 1 - Parts Location

Figure 2 - Remove the Bulkhead Light

NOTE

To facilitate the work, the rear bulkhead can be removed by following the same steps as for the front bulkhead. But it is possible to do the work without having to remove it.

1.2. Remove and disconnect the lights from the rear and the front bulkheads. See Figures 1 and 2.

1.3. Remove the stanchions from the front bulkhead. See Figure 1.

1.4. Remove the front bulkhead.

1.5. Detach the stabilizer arms from the front and rear sections of the vehicle, fold them and attach them to the guiding profile. See Figure 1.

1.6. Remove the Energy Guidance System (EGS):

1.6.1. Cut the cable ties retaining the spacing tubes that extend across the top of the hoses and cables. Discard them. See Figure 3.

1.6.2. Unbolt the EGS from the front and the rear section of the vehicle. See Figure 3.

1.6.3. Remove the EGS while lifting the cables and hoses. See Figures 4 and 5.

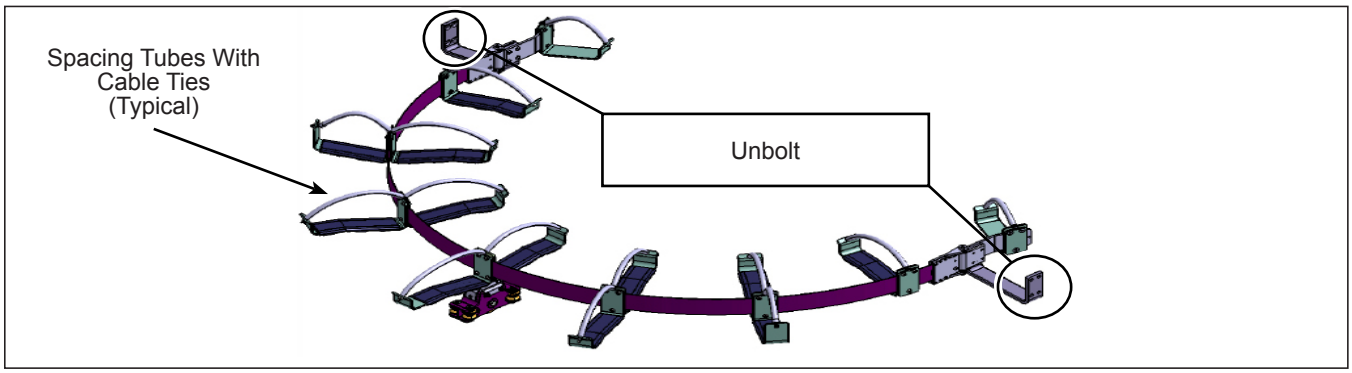

Figure 3 - Remove the Spacing Tubes and Unbolt the EGS

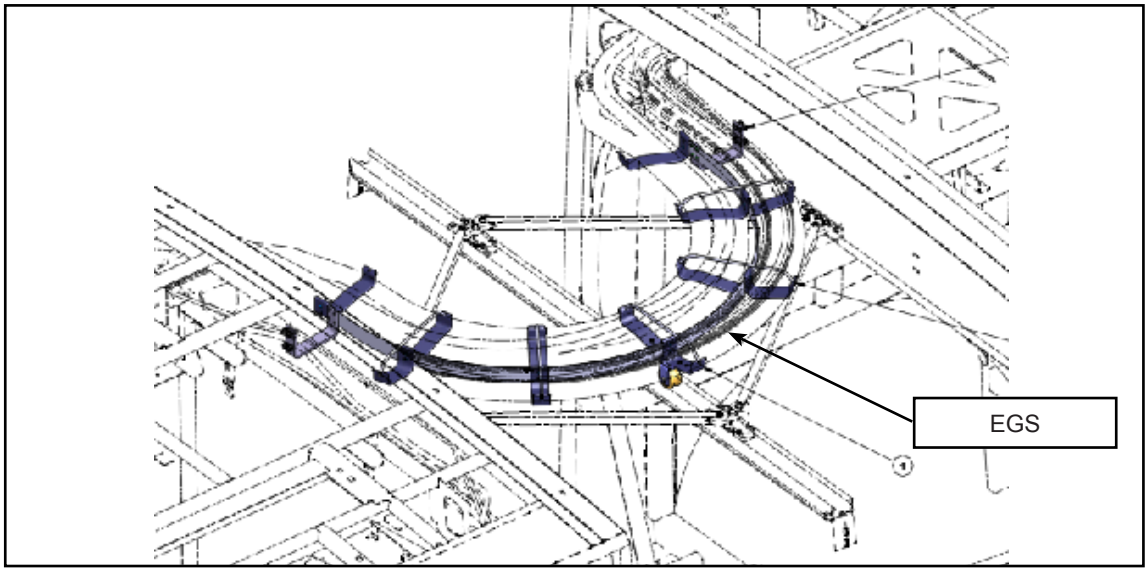

Figure 4 - Remove the EGS

Figure 5 - Remove the EGS While Lifting the Cables and Hoses (New EGS Shown)

1.7. Install the new EGS over the guiding profile while lifting the cables and hoses. The position for the hoses and cables stays the same.

1.8. Once the EGS is in place, install a brace such as a wood piece under the EGS to support the components. It will be held in place at each end by the stabilizer arm's brackets. See Figure 6.

1.9. Bolt the EGS and apply a torque of 15.5 lb-ft (21 N•m). Apply anti-tamper seal. See Figure 7.

Figure 6 - Wood Piece Installation

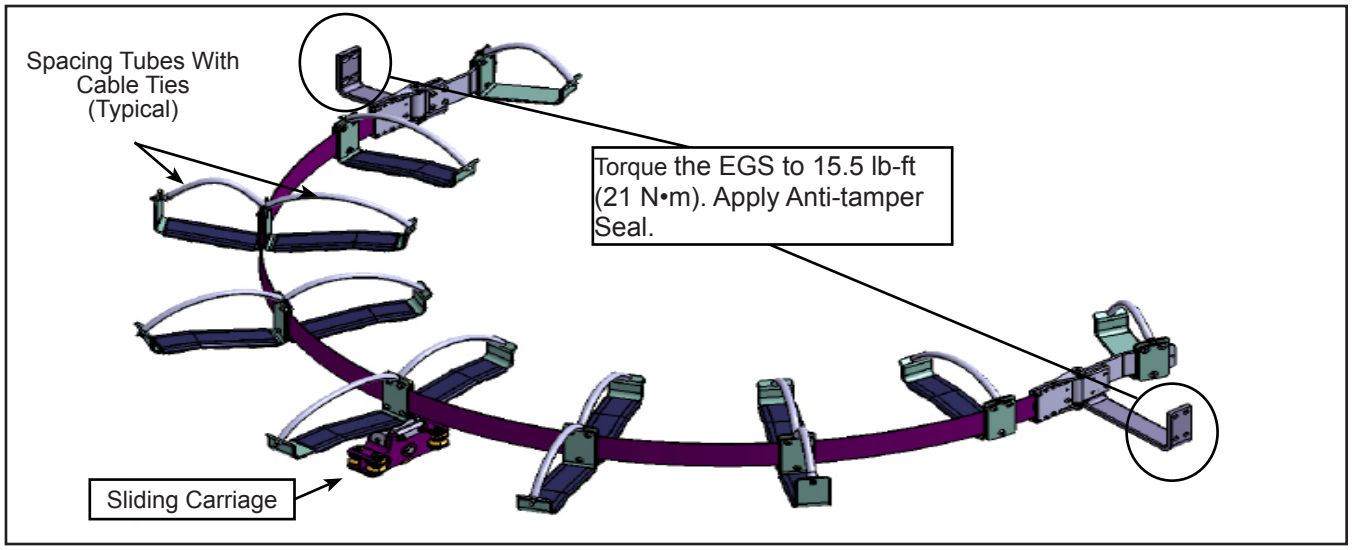

Figure 7 - Install the New EGS

1.10. Install the front bulkhead with the original hardware.

1.11. Install the previously removed stanchions. See Figure 1.

1.12. Install the spacing tubes and cables ties for each tray. Do not install the center cable tie or spacing tubes because the hoses and cables will need to be lifted for access to the center sliding carriage hardware. See Figures 7 and 8.

Figure 8 - Spacing Tubes Installation

1.13. Unbolt each handrail from the guiding profile. See Figure 9.

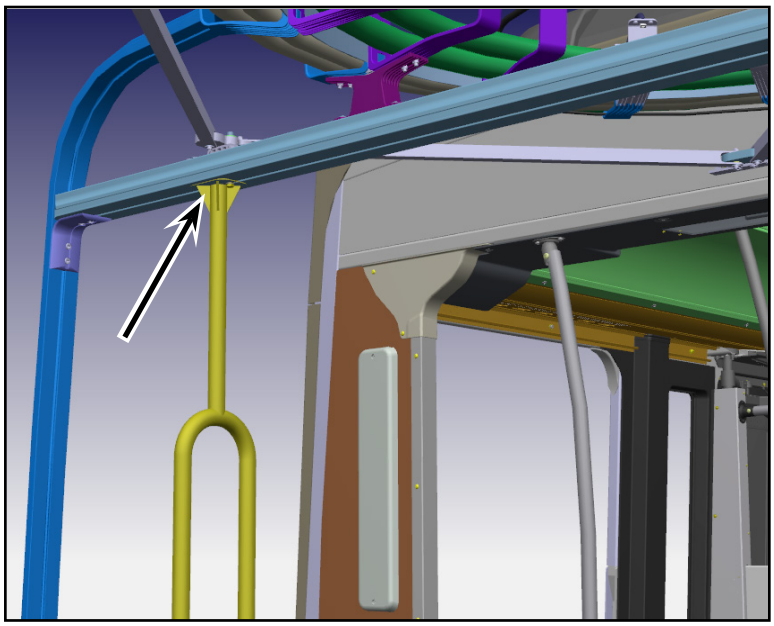

Figure 9 - Unbolt Each Handrail From the Guiding Profile

1.14. Guiding profile removal, see Figures 10 and 11:

1.14.1. Before removing the original guiding profile, position it at 1,986 mm between the floor and the bottom of the guide. If necessary, move the 90-degree brackets. Make a mark to facilitate the installation of the new guide in the correct position.

1.14.2. Remove the two bolts holding each end of the guiding profile. Remove the assembly and stabilizer arms. It is possible, but more difficult, to do so by leaving one or two of the 90 degrees brackets in place. See Figures 10 and 11.

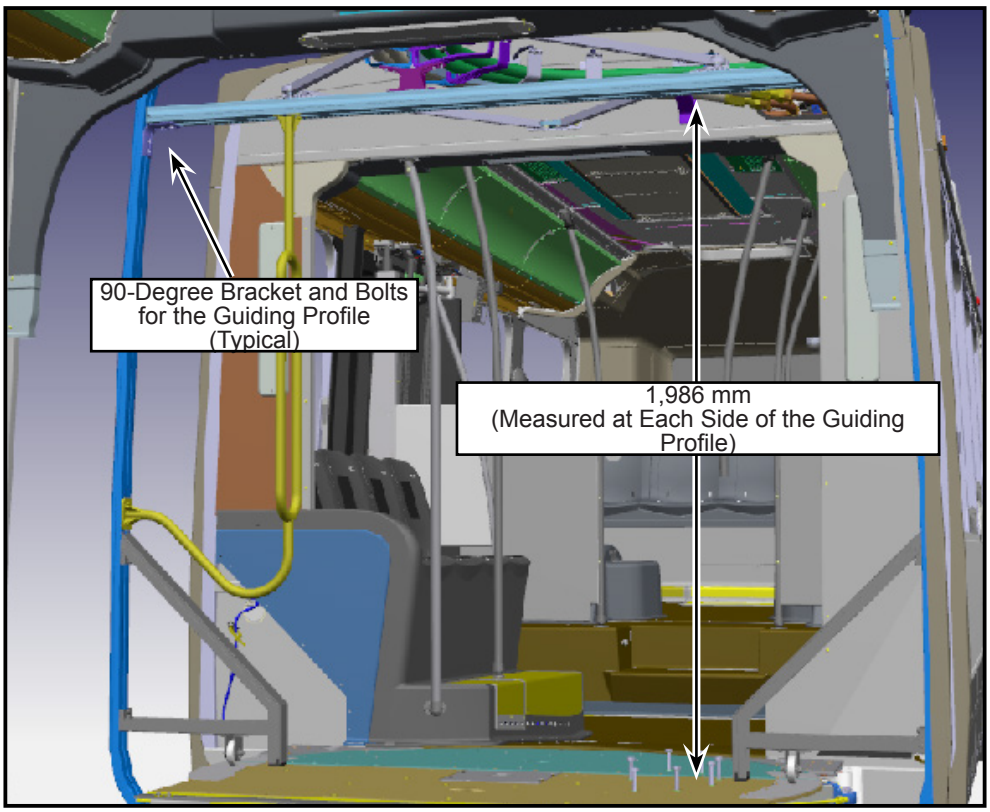

Figure 10 - Position the Guiding Profile

Figure 11 - Remove the Stabilizer Arms and Guiding Profile Assembly

1.15. Prepare and install the new guiding profile, see Figures 12 and 13:

1.15.1. Transfer the four original M8 N40770 tenon blocks into the new profile guide.

1.15.2. Insert the new sliding carriage into the guiding profile. Check that the carriage does not have a lateral clearance of more than 1 mm (0.3937 in).

1.15.3. Insert the stabilizer arms into the new guiding profile and secure the arms to the profile with cable ties.

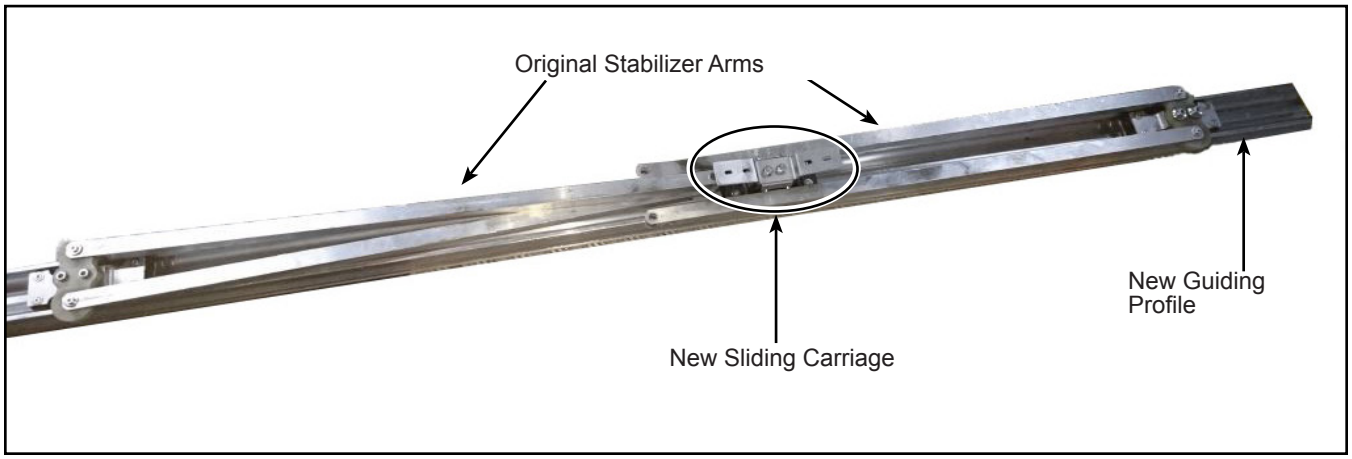

Figure 12 - Prepare the New Guiding Profile

Figure 13 - Secure the Stabilizer Arms

1.15.4. Bolt the new guiding profile assembly in place on the 90-degree brackets. See Figure 14.

1.15.5. Adjust as required to obtain the height of 1,986 ± 5 mm at each end. See Figure 10.

1.15.6. Apply 15.5 lb-ft (21 N•m) of torque to the eight bolts (four on each side).

Figure 14 - Install the New Guiding Profile

1.16. Bolt the stanchions under the guiding profile. See Figure 9. It might be required to adjust the height of the stanchions.

1.17. Bolt and torque to 15.5 lb-ft (21 N•m).

1.18. Sliding carriage installation, see Figure 15:

1.18.1. Install the four countersunk screws connecting the carriage to the EGS. Hoses and cables must be lifted to access the screws.

1.18.2. Torque to 4.6 lb-ft (6.3 N•m). Apply anti-tamper seal.

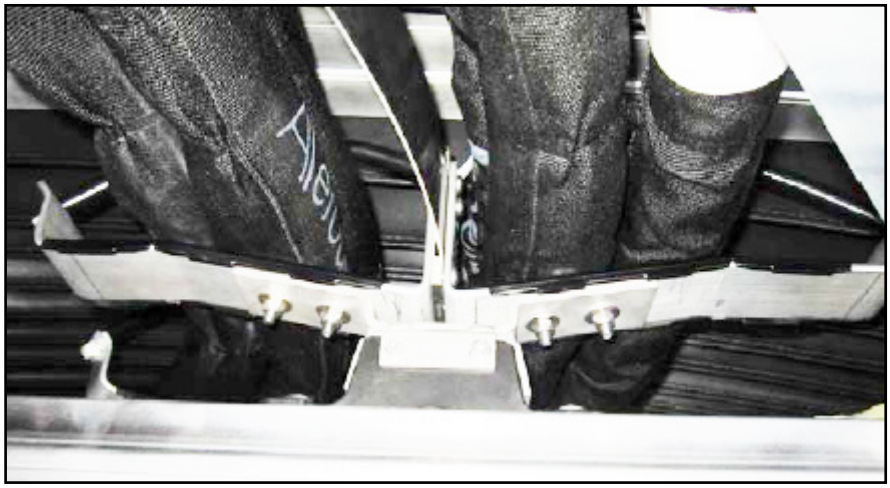

Figure 15 - Bolt the New Sliding Carriage

1.19. Install the last spacing tubes with cable ties above the sliding carriage for the center trays.

1.20. Bolt the stabilizer arms on their respective brackets in the front and rear sections of the vehicle. See Figure 16. The bolt head must be on the top and the nut on the bottom. Apply 6.6 lb-ft (9 N•m) of torque. Apply anti-tamper seal. Reinstall the protective caps on the head of the bolts.

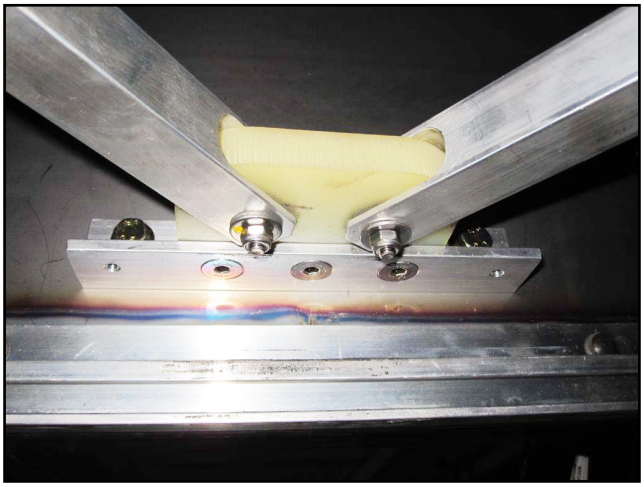

Figure 16 - Bolt the Stabilizer Arms

NOTE

Cooling hoses should be evaluated to ensure they have the correct length and position. The aim being to eliminate any additional stresses that would be applied to the articulated support. A minimum distance of 1/2 in. (13 mm) is required between the cooling hoses and the blade of the EGS. See Figure 17. If the distance is not encountered, it may be possible to obtain more clearance by detaching and moving the hoses that are further upstream or downstream of the EGS. If the minimum distance is still not met, the hose (s) must be replaced.

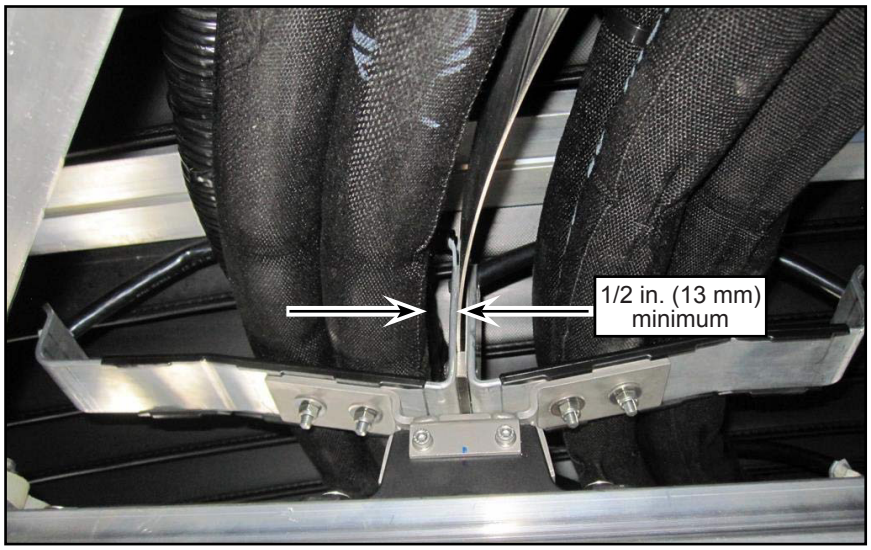

Figure 17 - Position the Cooling Hoses 1/2 in. (13 mm) From the EGS Blade

1.21. For the new positions of the cable ties, see Figures 18 and 19. Remove the original cable ties facing the trays.

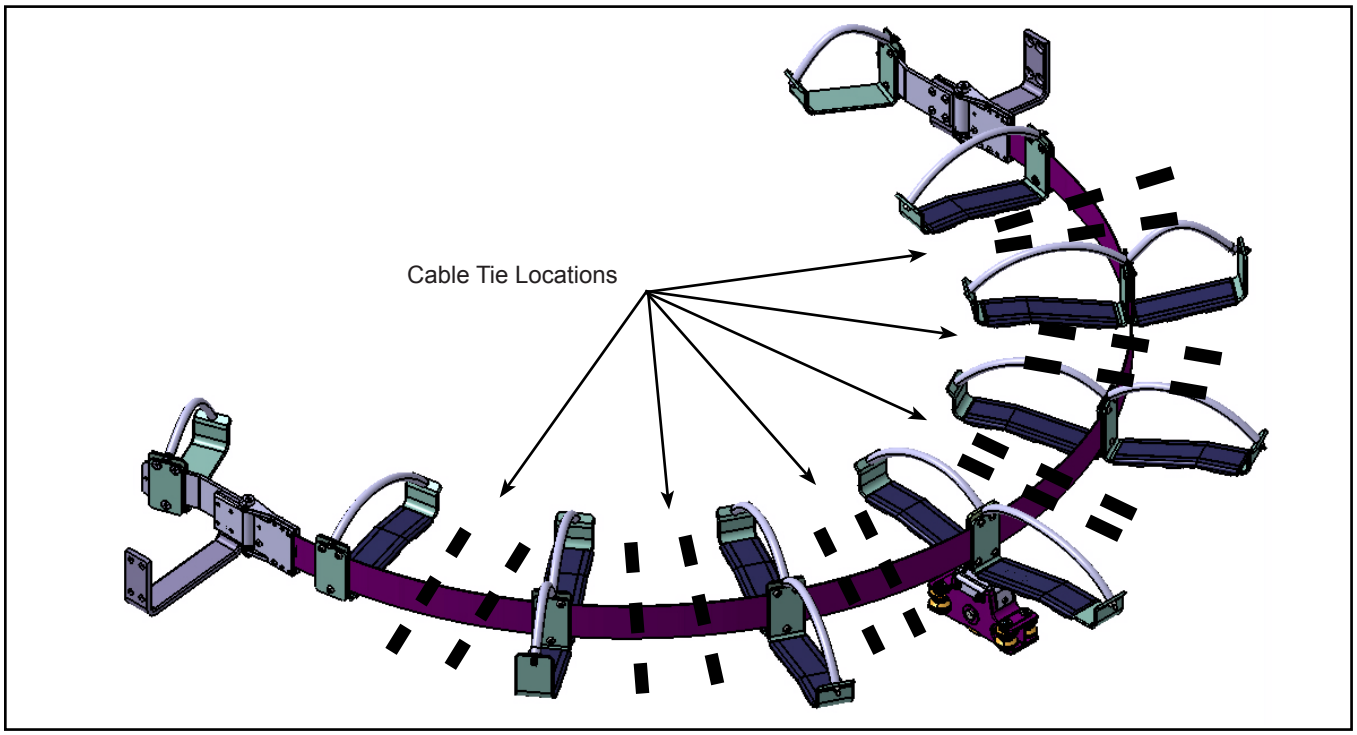

Figure 18 - Cable Tie Locations

NOTE

The position of the components remains the same as they were before.

1.22. Position the locking mechanism of the cable ties to avoid chafing. They must be facing away from any hose, cable or tray. See Figures 18 and 19.

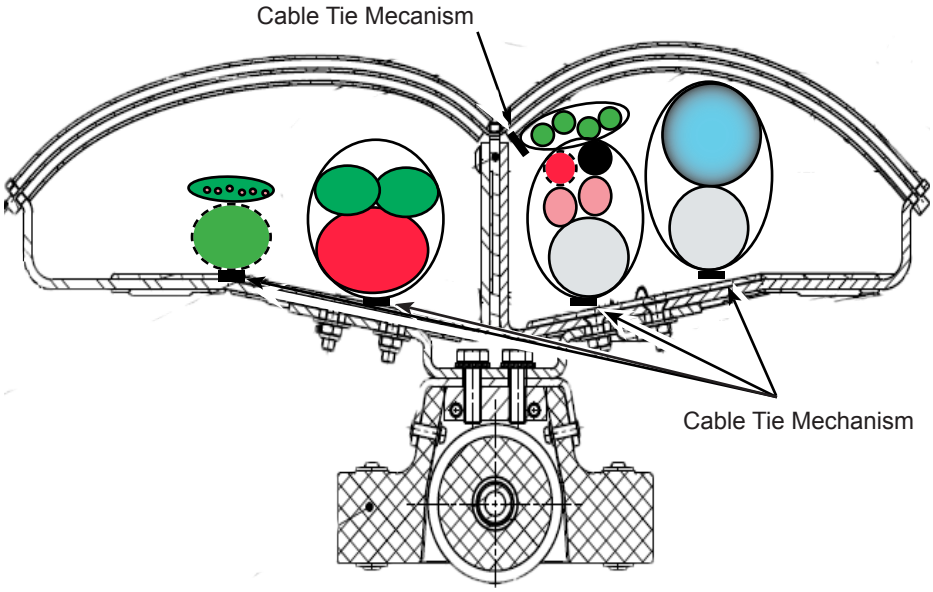

Figure 19 - Cable Tie Mechanism Position

1.23. Install the removed parts to complete the Service Bulletin.

1.24. Reconnect the starting circuit on the control box at the rear of the vehicle and place the battery disconnect switches in the ON position.

1.25. Clean up the vehicle.

1.26. Put the vehicle back in service. ❖