Technical product information

Topic	Hood replacement - right hand C post headlining guide
Market area	Bentley: worldwide (2WBE),Hongkong-Macau (5HK)
Brand	Bentley
Transaction No.	2042462/1
Level	EH
Status	Approval
Release date	

New customer code

Object of complaint	Complaint type	Position
Roof systems, special bodies -> Convertible roof -> Softtop cover	component / consumables -> loose	
Roof systems, special bodies -> Convertible roof -> Softtop cover	component / consumables -> damaged	
Roof systems, special bodies -> Convertible roof -> Softtop cover	visual appeal / surface -> rippled	
Roof systems, special bodies -> Convertible roof -> Softtop cover	visual appeal / surface -> wrinkled	
Roof systems, special bodies -> Convertible roof -> Softtop headliner	component / consumables -> loose	
Roof systems, special bodies -> Convertible roof -> Softtop headliner	visual appeal / surface -> fringed	
Roof systems, special bodies -> Convertible roof -> Softtop headliner	component / consumables -> cracked/broken	

New workshop code

Object of complaint	Complaint type	Position
Roof systems, special bodies -> Convertible roof -> Softtop headliner	visual appeal / surface -> imperfect edges	
Roof systems, special bodies -> Convertible roof -> Softtop headliner	dimensional accuracy -> incorrect gap width	

Vehicle data

New GTC

Sales types

Type	MY	Brand	Designation	Engine code	Gearbox code	Final drive code
394*	2012	E		*	*	*
394*	2013	E		*	*	*
394*	2014	E		*	*	*
394*	2015	E		*	*	*

Chassis numbers

Manufacturer	Filler	Type	Filler	MY	Factory	From	To	Prod from	Prod to
SCB	**	**	*	*	*	069082	097150		
SCB	**	**	*	*	*	040000	099999		
SCB	GR3	ZA	5	C	C	000003	000003		
SCB	GR3	ZA	7	C	C	000004	000004		
SCB	GC3	ZA	7	E	C	000380	000380		

Documents

Document name
master.xml
master.doc

Customer statement / workshop findings

Convertible roof issue that requires replacement headlining or hood assembly

Technical background

In the event that a headlining or hood assembly has to be replaced for any reason then the following guide piece should also be fitted. Fitting this additional guide to control the headlining in the vicinity of the right hand 'C' post will preserve the aesthetic of the replacement headlining in that area

Production change

.

Measure

This operation must only be carried out on the right hand side of the roof assembly. The following should be noted before the procedures are carried out

Warning: There are no anti-trap features fitted to the linkage flaps, front header panel, tension bow or tonneau cover. Ensure all persons are clear of the mechanism, and there are no obstructions in the vicinity during the operation of the roof

Caution: To avoid a clash of panels it is important that the luggage compartment and tonneau cover assembly are not opened at the same time. One of these must be fully closed at all times

Note: To carry out the following procedures, the power operated roof assembly will have to be positioned partially open in a transient state. With the ignition on any transient roof position will only be maintained for 10 minutes after which a warning will sound prior to the roof assembly gradually folding down as the hydraulic pressure decays. Therefore consideration should be given to supporting the roof system during the following procedure (see Figure 4)

Caution: Whenever air tools are employed or compressed air is used to remove debris it is imperative that the air is clean and dry and does not contain any lubricants. The exhaust from an air tool supplied with lubricated air is likely to stain the hood

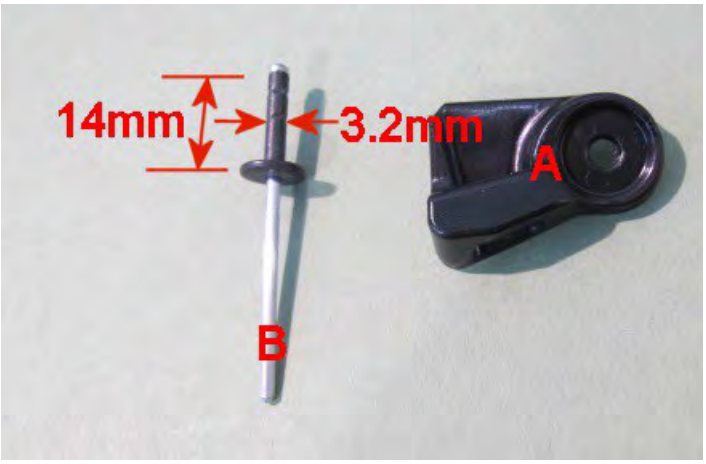

Figure 1

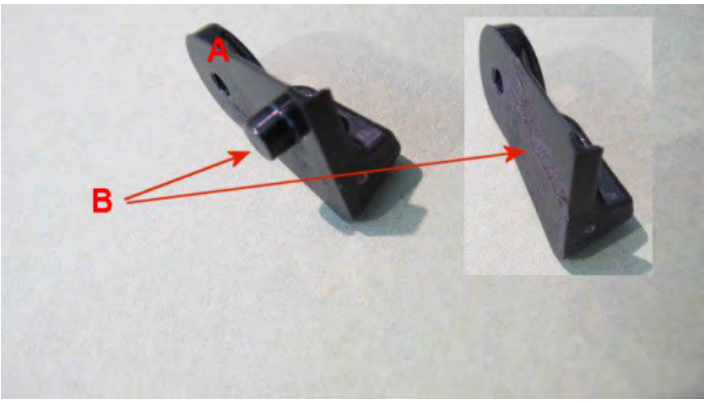

Figure 2

1. Take guide A and remove, cut off, the original locating peg B (see Figure 2)

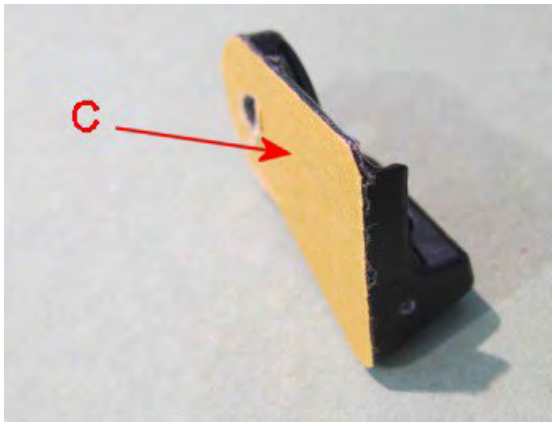

Figure 3

2. Apply double sided adhesive tape to the guide surface from which the locating peg has been removed (C)

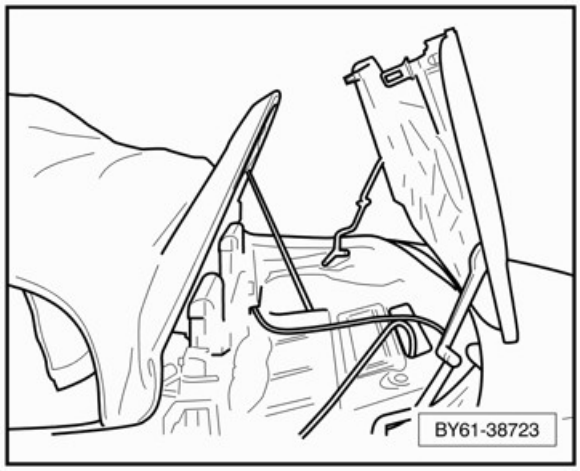

Figure 4

3. With the tonneau cover in the vertical position, support the tension bow with a suitable prop, take care not to damage any trim (see Figure 4)

Figure 5

4. Identify the right hand 'dead centre' linkage (A). The finished guide position is shown at point B (see Figure 5)

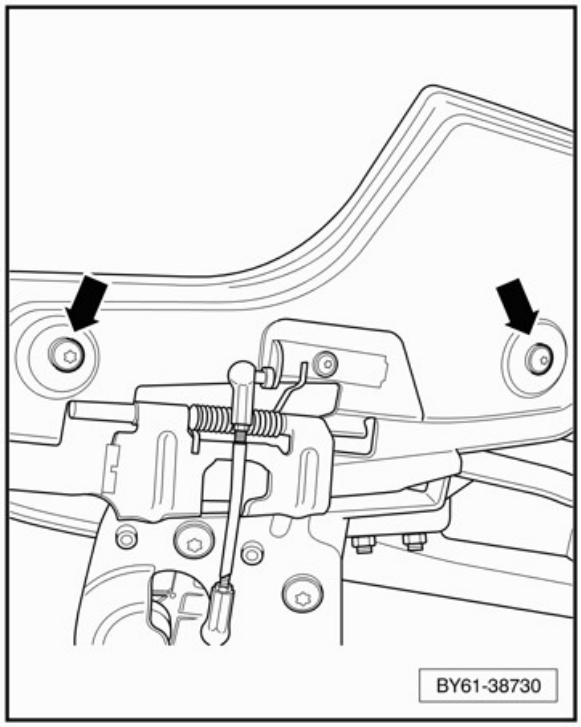

Figure 6

5. To improve access during the drilling operation remove the right hand linkage flap cover (see Figure 6). Reference workshop manual Rep.Gr.61 Linkage flap trimmed cover – To remove and fit

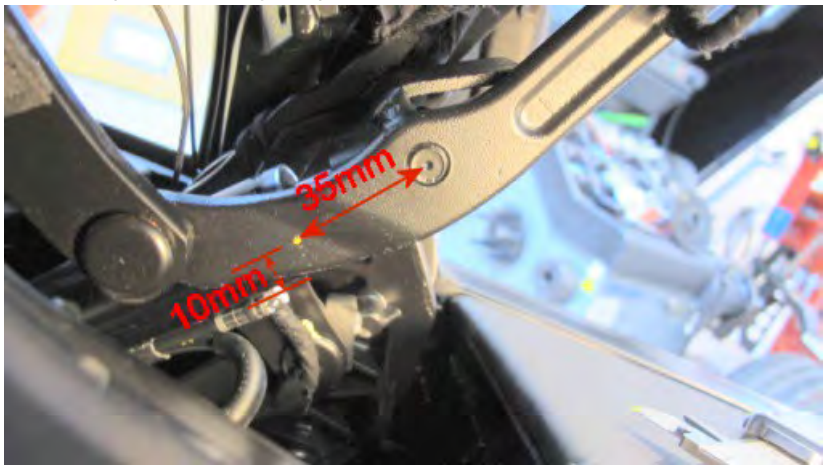

Figure 7

6. Mark the required hole position on the dead centre linkage, yellow dot. The hole should be located 35mm from the centre of ball joint stud and 10mm up from the outer edge of the dead centre linkage (see Figure 7)
7. Produce a 3.2mm rivet hole in the right hand dead centre linkage at the position marked in operation 6. Care must be taken when drilling to avoid damage to trim specifically at the point the drill breaks through
8. Remove any burr and de-grease the area where the guide is to be fitted before removing the protective backing from the double sided tape

Figure 8

9. Position the guide over the 3.2mm hole and secure with 14mm x 3.2mm rivet (see Figure 8)

10. Remove any debris produced during the drilling and riveting operation

Figure 9

11. Figure 9 shows the finished item

Warranty accounting instructions

Please note: Normal warranty policies are applicable

Warranty Type	110 or 910
Labour Operation Code	61 01 41 00
Damage Service Number	61 01
Damage Code	00 55
Time	30 TU

Parts information

Part Number	Description	Quantity
3W7898025	Repair kit convertible roof	1
Source locally	Double sided adhesive tape	1

The required parts, guide and rivet, are contained in convertible roof repair kit 3W7898025 (see Figure 1)