WF39 - Replacing Relay for Radiator Fan (Workshop Campaign)

Vehicle Type: **918 Spyder**

Model Year: **2015**

Concerns: **Relay for radiator fan**

Information: This is to inform you of a voluntary Workshop Campaign on the above-mentioned vehicles. **There is a possibility that the switching contacts of the relay for the radiator fan can stick temporarily on the affected vehicles.**

This can cause all four radiator fans to come on at times although the fans were not activated by the engine control's thermal management system.

Action Required: Replace relay for radiator fan.

Information

Before carrying out the work described here, it is important to check whether the vehicle in question is also affected by the campaign specified below:

- AF05 Stop Sale Campaign/Recall campaign – Checking and reworking wire harness for rear left radiator fan

If the vehicle is assigned to the specified campaign, **both** campaigns must be **carried out together if possible**.

Any other campaigns assigned to the vehicle must also be carried out.

Information

The vehicle must be checked for defects and damage (damage to paintwork, missing parts, etc.) **each time** it is handed over, transferred or delivered. Confirmation that the vehicle is in good condition or details of any damage to the vehicle must be documented and archived for feedback purposes.

Service Level: **This campaign must be carried out by a Service Level 2 Porsche Dealer.**

Service Level 0 Porsche Dealers are **not** authorized to carry out this campaign.
In accordance with the service concept for the 918 Spyder, the vehicle must be transferred to the nearest Service Level 2 Porsche Dealer in order to carry out this campaign.

In this case, please contact the nearest Service Level 2 Porsche Dealer and arrange for the transfer of the vehicle and implementation of the measure.

Information on invoicing for the transfer of the vehicle can be found under ⇒ *Technical Information 'Invoicing'* at the end of this document.

Affected Vehicles: The VIN(s) can be checked by using PIWIS Vehicle Information link to verify if the campaign affects the vehicle. This campaign is scope specific to the VIN! Failure to verify in PIWIS may result in an improper repair. This campaign affects 242 vehicles in North America.

Parts Info: **NOTE: PARTS WILL NOT BE AUTOMATICALLY ALLOCATED TO YOUR DEALERSHIP. ALL PARTS MUST BE ORDERED VIA A PTEC / PAV.**

Part No.	Designation	Qty.
000.043.210.22	⇒ Relay for radiator fan	1 ea.

Materials: **Required materials** (usually already available in the Porsche Dealer):

Part No.	Designation	Qty.
...	Tie-wrap, 4.0 mm wide, 300 mm long e.g. 999.513.076.40	1 ea. *

* The WWS Warranty system will automatically add into the "Miscellaneous item" section (sublet) of the claim after the claim has been submitted.

Tools:
- **9001 - Socket wrench** for engine cover caps
- Torque wrench, 2 – 10 Nm (1.5 – 7.5 ftlb.), e.g. **V.A.G 1783 - Torque wrench, 2-10 Nm (1.5-7.5 ftlb.)**
- Protective vehicle covers for the 918 - for rear spoiler and side / front engine cover

Work Procedure: See Attachment “A”.

Claim Submission: See Attachment “B”.

2015© Porsche Cars North America, Inc.

Installation
Position:

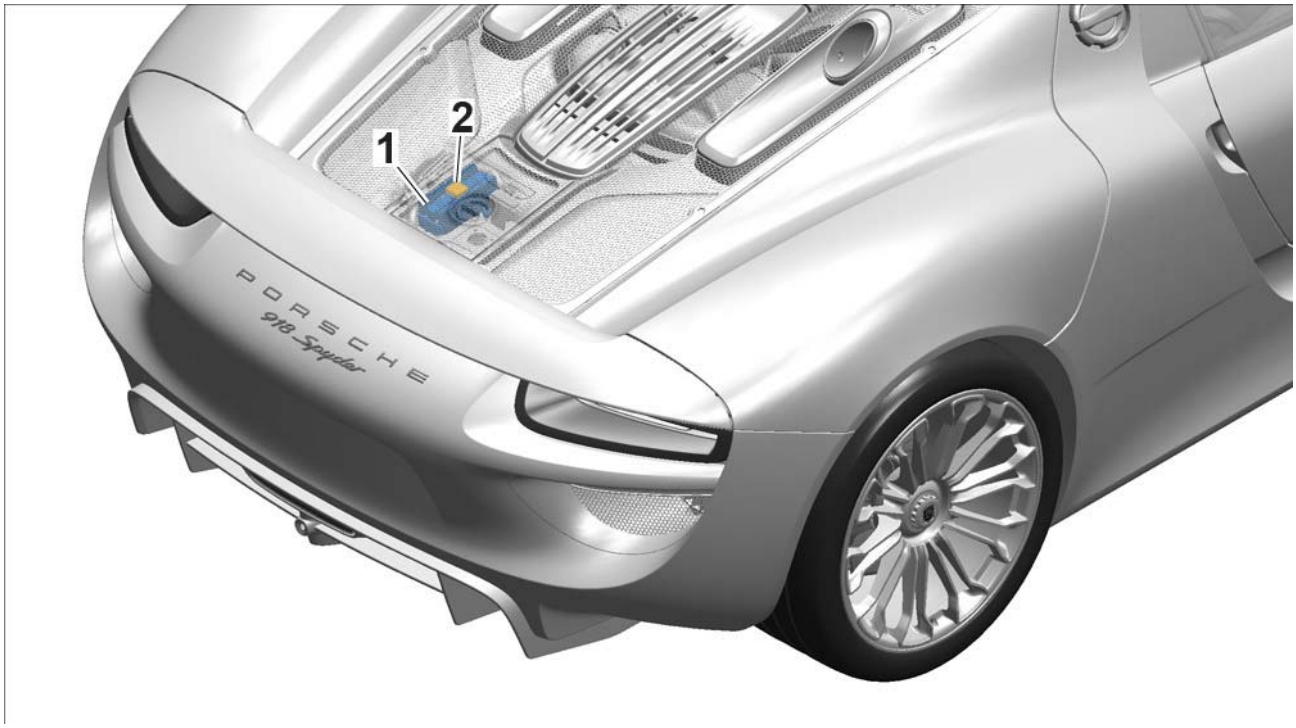

Installation position of relay for radiator fan

1 – Relay carrier in engine compartment
2 – Relay for radiator fan (**replace**)

Attachment "A": **Work Procedure**

1 Remove engine cover ⇒ *Workshop Manual '108319 Removing and installing engine cover'*.

2 Loosen and unscrew fastening screws ⇒ *Cover for relay carrier* **-2-** on the cover ⇒ *Cover for relay carrier* **-1-** of the fuse box and relay carrier.

3 Remove the fuse box cover ⇒ *Cover for relay carrier* **-1-**.

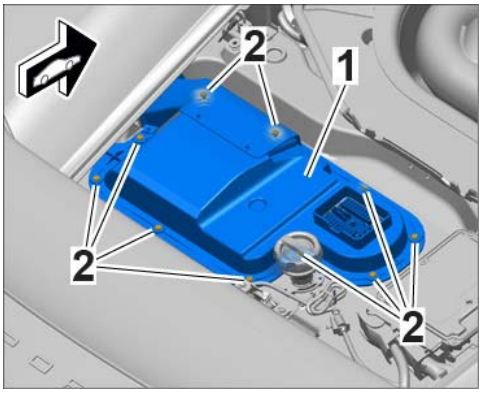

Cover for relay carrier

4 Unclip retaining frame ⇒ *Removing retaining frame* **-1-** for relay at the front left and right of the relay carrier ⇒ *Removing retaining frame* **-2-** (⇒ *Removing retaining frame* **-arrows A-**) and bend it up. Then disengage the retaining frame at the rear of the relay carrier ⇒ *Removing retaining frame* **-arrow B-** and remove it.

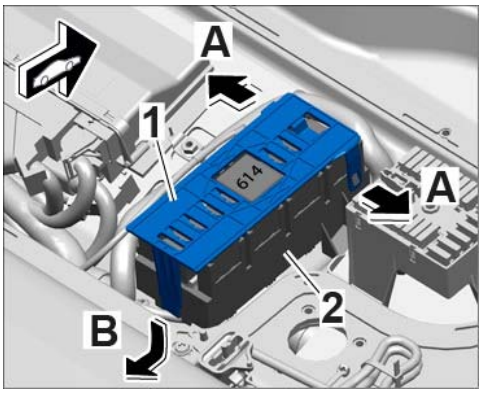

Removing retaining frame

5 Replace and secure relay for radiator fan.

Information

The installation height of the new relay is less than that of the installed relay due to a modified internal design.
As a result, the new relay must also be secured with a tie-wrap following installation in order to ensure that it will remain fitted securely in the relay carrier.

5.1 Carefully pull relay for radiator fan ⇒ *Replacing relay* **-1-** – **marking: No. 614** – out of the plug-in socket for the relay carrier ⇒ *Replacing relay* **-2-** and remove it.

5.2 Press new relay ⇒ *Replacing relay* **-1-** (Part No. 000.043.210.22) as far as it will go into the plug-in socket according to the installation position of the relay you just removed.

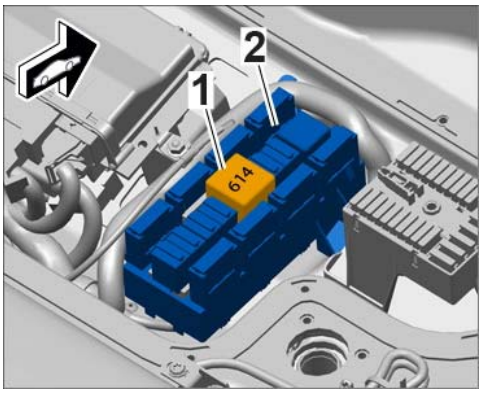

Replacing relay

2015© Porsche Cars North America, Inc.

5.3 Guide tie-wrap ⇒ *Securing relay* **-1-** through underneath the relay carrier starting from the left side as shown ⇒ *Securing relay* **-arrows A-**.

5.4 Fit tie-wrap ⇒ *Securing relay* **-1-** through the gap between the fuse carriers, centre it over the relay and tighten it so that the catch ⇒ *Securing relay* **-arrow B-** on the tie-wrap is then at the right side of the relay carrier.

5.5 Cut off extra length of tab on the tie-wrap.

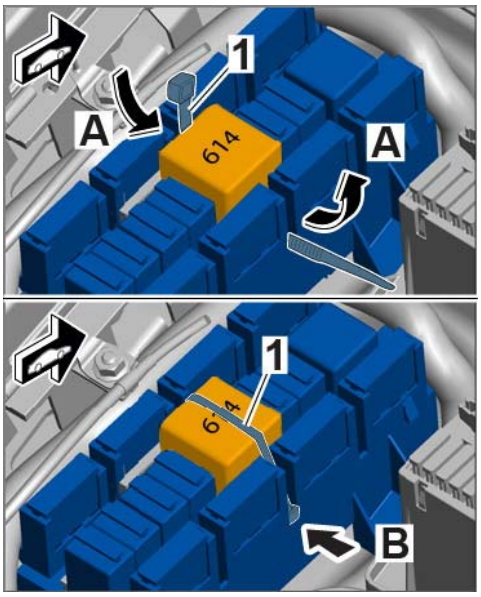

Securing relay

6 Engage retaining frame ⇒ *Installing retaining frame* **-1-** for the relay at the rear of the relay carrier ⇒ *Installing retaining frame* **-2-** (⇒ *Installing retaining frame* **-arrow A-**).
Then press the retaining frame onto the relay carrier until the locking hooks engage securely at the front left and right ⇒ *Installing retaining frame* **-arrows B-**.

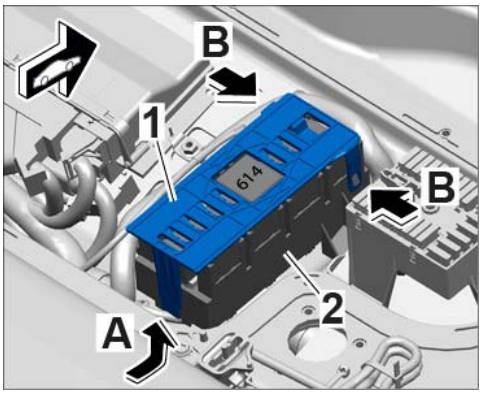

Installing retaining frame

NOTICE

Cover for fuse box and relay carrier fitted incorrectly or damaged

- **Water leaking into the fuse box and relay carrier.**

⇒ **Check seal on the cover. If the seal is damaged, the cover must be replaced.**

⇒ **Ensure absolute cleanliness when fitting the cover.**

⇒ **Clean the joint face of the cover on the cross member.**

⇒ **Clean the seal on the cover.**

⇒ **If seal is damaged and needed to be replaced, please create a separate PQIS line and code to part ID "9783" Relay Carrier. Part Number 918.610.112.02**

7 Install cover ⇒ *Cover for relay carrier* **-1-** for fuse box and relay carrier.
Screw in and tighten fastening screws ⇒ *Cover for relay carrier* **-2-**.

8 Install engine cover ⇒ *Workshop Manual '108319 Removing and installing engine cover'*.

9 Enter the workshop campaign in the Warranty and Maintenance booklet.

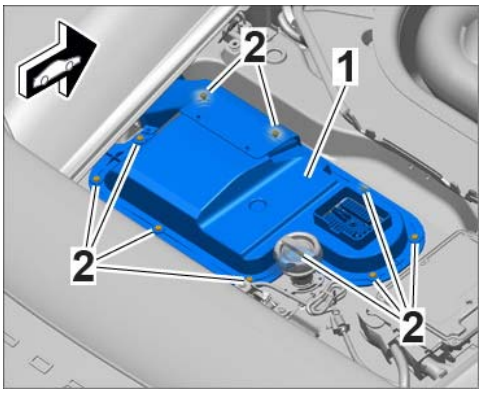

Cover for relay carrier

Attachment "B": **Claim Submission** - Workshop Campaign WF39
Warranty claims should be submitted via WWS/PQIS.
Open campaigns may be checked by using either the PIWIS Vehicle Information system or through PQIS Job Creation.
Labor, parts, and sublet will be automatically inserted when Technician is selected in WWS/PQIS. If necessary, the required part numbers will need to be manually entered into warranty system by the dealer administrator.

Service Level: **This campaign must be carried out by a Service Level 2 Porsche Dealer.**

Service Level 0 Porsche Dealers are **not** authorized to carry out this campaign.
In accordance with the service concept for the 918 Spyder, the vehicle must be transferred to the nearest Service Level 2 Porsche Dealer in order to carry out this campaign.

In this case, Service Level 0 Porsche Dealer can invoice the cost items listed below for vehicle acceptance, transporting the vehicle and accepting the vehicle following return transport using the **new vehicle warranty** for the vehicle in accordance with the specifications in the 918 Spyder After Sales Fact Book 2014:

• Vehicle acceptance	100 TU
• Transporting the vehicle	100 TU
• Acceptance of the vehicle following return transport	50 TU
• Costs for transporting the vehicle to and from the Porsche Dealer	Amount as per invoice *

* Please document copy of invoice in PQIS

Please invoice the costs by specifying **Damage code C902 97 000** and enter the technical reason by specifying **Coding C9020 9735** in PQIS. Also specify **Campaign WF39** under Comment.

Service Level 2 Porsche Dealers must always submit an invoice for the **campaign scope**.

2015© Porsche Cars North America, Inc.

Scope:

Working time:

Replacing relay for radiator fan — Labor time: **135 TU**

Includes: Removing and installing engine cover
Removing and installing cover for fuse box
Securing relay

Parts required:

000.043.210.22	Relay for radiator fan	1 ea.

Required materials:

...	Tie-wrap, 4.0 mm wide, 300 mm long	1 ea. *

* The WWS Warranty system will automatically add into the "Miscellaneous item" section (sublet) of the claim after the claim has been submitted.

⇒ Damage code WF39 066 000 2

References: *⇒ Workshop Manual '108319 Removing and installing engine cover'*

For additional information, see:
⇒ Workshop Manual '978309 Loosening and securing relay carrier'

Important Notice: Technical Bulletins issued by Porsche Cars North America, Inc. are intended only for use by professional automotive technicians who have attended Porsche service training courses. They are written to inform those technicians of conditions that may occur on some Porsche vehicles, or to provide information that could assist in the proper servicing of a vehicle. Porsche special tools may be necessary in order to perform certain operations identified in these bulletins. Use of tools and procedures other than those Porsche recommends in these bulletins may be detrimental to the safe operation of your vehicle, and may endanger the people working on it. Properly trained Porsche technicians have the equipment, tools, safety instructions, and know-how to do the job properly and safely. If a particular condition is described, do not assume that the bulletin applies to your vehicle, or that your vehicle will have that condition. See your authorized Porsche Dealer for the latest information about whether a particular technical bulletin applies to your vehicle. Part numbers listed in these bulletins are for reference only. Always check with your authorized Porsche dealer to verify the current and correct part numbers. The work procedures updated electronically in the Porsche PIWIS diagnostic and testing device take precedence and, in the event of a discrepancy, the work procedures in the PIWIS Tester are the ones that must be followed.

© Porsche Cars North America, Inc.

Dealership	Service Manager	_____	Shop Foreman	_____	Service Technician	_____	_____	_____	_____
Distribution Routing	Asst. Manager	_____	Warranty Admin.	_____	Service Technician	_____	_____	_____	_____

Dr. Ing. h.c. F. Porsche AG is the owner of numerous trademarks, both registered and unregistered, including without limitation the Porsche Crest®, Porsche®, Boxster®, Carrera®, Cayenne®, Cayman®, Macan®, Panamera®, Speedster®, Spyder®, 918 Spyder®, Tiptronic®, VarioCam®, PCM®, PDK®, 911®, RS®, 4S®, FOUR, UNCOMPROMISED®, and the model numbers and the distinctive shapes of the Porsche automobiles such as, the federally registered 911 and Boxster automobiles. The third party trademarks contained herein are the properties of their respective owners. Porsche Cars North America, Inc. believes the specifications to be correct at the time of printing. Specifications, performance standards, standard equipment, options, and other elements shown are subject to change without notice. Some options may be unavailable when a car is built. Some vehicles may be shown with non-U.S. equipment. The information contained herein is for internal authorized Porsche dealer use only and cannot be copied or distributed. Porsche recommends seat belt usage and observance of traffic laws at all times.

Printed in the USA