| | | | |
|---|---|---|---|
| **Countries:** | CANADA, UNITED STATES, MEXICO | **Document ID:** | IK1201248 |
| **Availability:** | ISIS, FleetISIS | **Revision:** | 1 |
| **Major System:** | ENGINES | **Created:** | 12/15/2014 |
| **Current Language:** | English | **Last Modified:** | 3/11/2015 |
| **Other Languages:** | NONE | **Author:** | Josh Bowman |
| **Viewed:** | 970 | | |

Less Info

Hide Details Coding Information

| Copy Link | Copy Relative Link | Bookmark | Add to Favorites | Print | Provide Feedback | Helpful | Not Helpful |
|---|---|---|---|---|---|---|---|
| | | View My Bookmarks | | | | 9 | 0 |

**Title:** Cooling System Flush Procedure

**Applies To:** All Engines

## CHANGE LOG

2015/03/10 - Added system flush checklist, notes and warning, along with formatting.
2015/02/12 - Initial Article Release

## DESCRIPTION

In the event of an oil cooler failure, engine oil may have entered the cooling system and mixed with the engine coolant. This document will guide the user to properly flush the contaminated cooling system. This procedure may be used on all engines, however; for demonstration purposes this article uses a MaxxForce 13L Engine.

## SYMPTOMS

**Customer Observations or Concerns:**
- Contaminated cooling system
- Coolant hose swelling or softening

## SPECIAL TOOLS

| Tool Description | Tool Number | Comments | Instructions |
|---|---|---|---|
| Coolant Flush Adapter Kit | 09-889-02 | | Link |
| Coolant Management System | KL5007NAV | | Link |
| Cleaning Management System | 12-353-01A | | Link |
| International Reprogramming Harness | 406010 | SCR Equipped Only | |
| International Electronic Engine Terminal Test Kit | ZTSE4435C | SCR Equipped Only | |
| Breakout Harness | ZTSE4827 | SCR Equipped Only | |

## SERVICE PARTS INFORMATION

| Kit Description | Part Number | Qty | Notes |
|---|---|---|---|
| Fluid, Engine System Cleaner | 2514295C91 | 1 | Two 2.5 Gal. Containers |

| | | | |
|---|---|---|---|
| Coupling, Heat Exchanger Quick Connect | 3688493C2 | 1 | Only if it is **not** Installed |

## REPAIR STEPS

**NOTE:**

**This procedure uses the tooling (sizes) required to perform these steps on certain vehicles. Some vehicles may require a different size tool. These tools can be found in the Coolant Flush Adapter Kit as there are multiple sizes of the same tooling.**

**NOTE:**

**When draining any contaminated fluid from the system components, make sure to drain into a drain pan, NOT the Coolant Management System (CMS).**

**WARNING:**

**GOVERNMENT REGULATION: Engine fluids (oil, fuel and coolant) may be hazard to human health and the environment. Handle all fluids and other contaminated materials (e.g. filters, rags) in accordance with applicable regulations. Recycle or dispose of engine fluids, filters and other contaminated materials according to applicable regulations.**

### BEFORE BEGINNING:

**Understand what components are affected by a contaminated cooling system. Review the following checklist to ensure all components are accounted for.**

| System Flush Checklist | Y/N? |
|---|---|
| Engine/Radiator | |
| Heater Core (s) | |
| Diesel Exhaust Fluid (DEF) Heater Hoses | |
| Optional Heaters | |
| Optional Auxiliary Power Unit (APU) | |
| Aftermarket Equipment (non-warranty) | |

### PREPARATION:

- Inspect coolant hoses for swelling and/or softening from oil contamination
- If cooling system is full, start engine and allow coolant temperature to reach 120°F (48.8°C), to aid in draining cooling system contaminants.
- If cooling system is empty, fill the system with water following the proper fill procedure (IK0900017), then start engine and allow coolant temperature to reach 120°F (48.8°C).

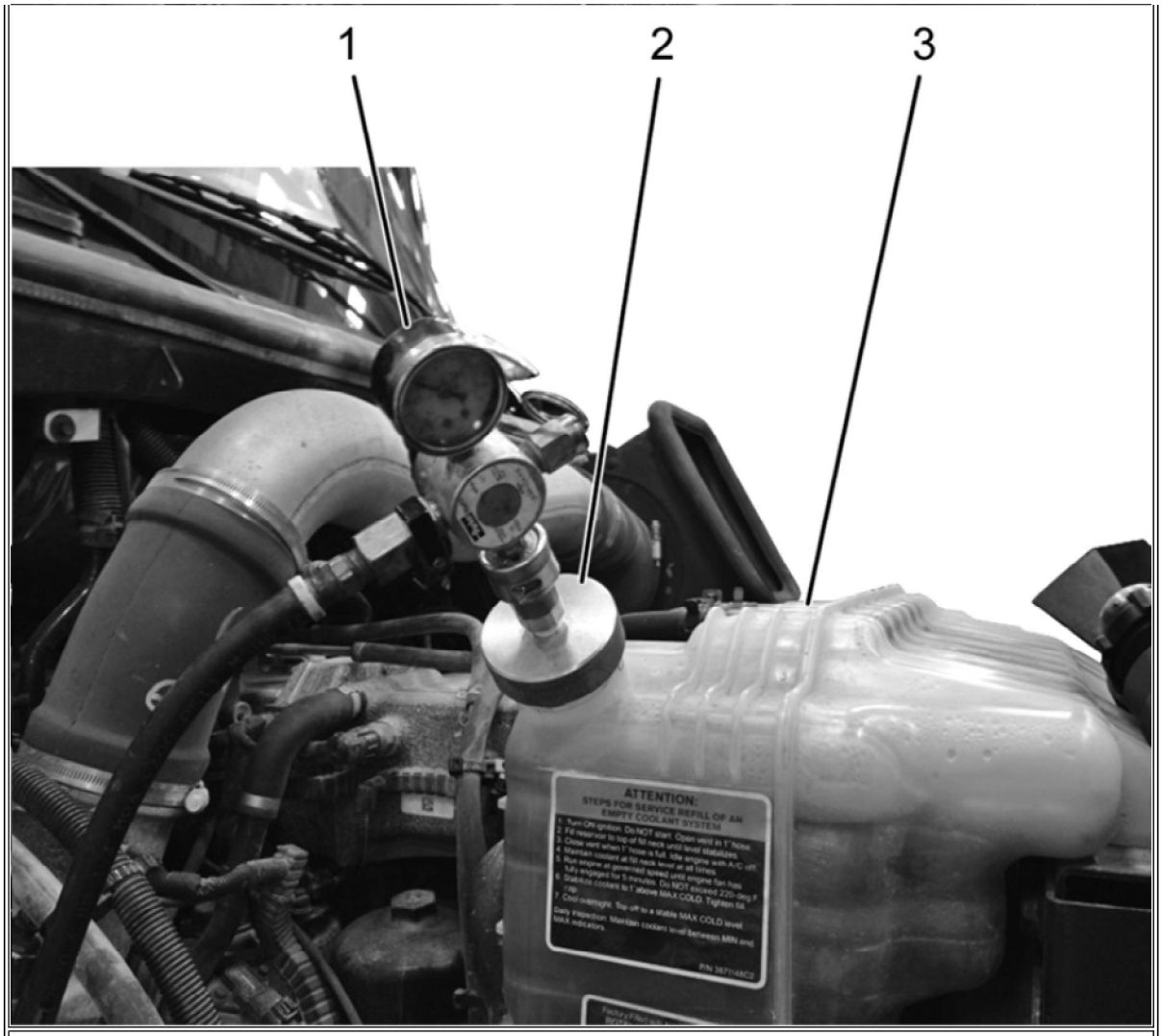


**Figure 1: Deaeration Tank and Pressure Module**

Item 1: Pressure Module (KL5006NAV)
Item 2: Cap Adapter (KL5006NAV)
Item 3: Deaeration Tank

1. Install cap adapter (**Figure 1,** Item 2) and pressure module (**Figure 1,** Item 1) onto deaeration tank (**Figure1,** Item 3)

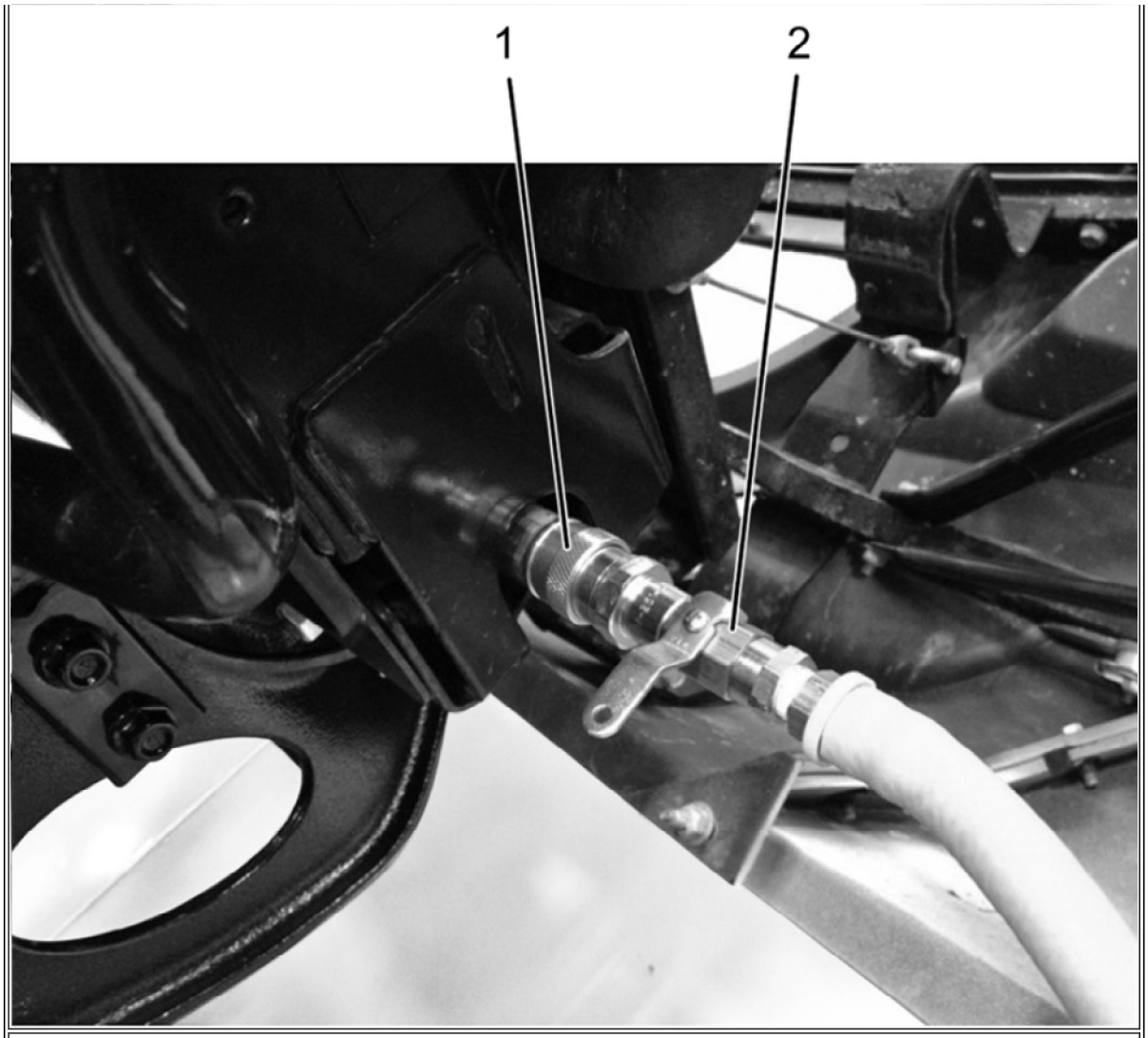


**Figure 2: Radiator Discharge Hose**

Item 1: Radiator Drain Coupler
Item 2: Radiator Discharge Hose (09-146-01)

2. Connect radiator discharge hose (**Figure 2,** Item 2) onto radiator drain coupler (**Figure 2,** Item 1)

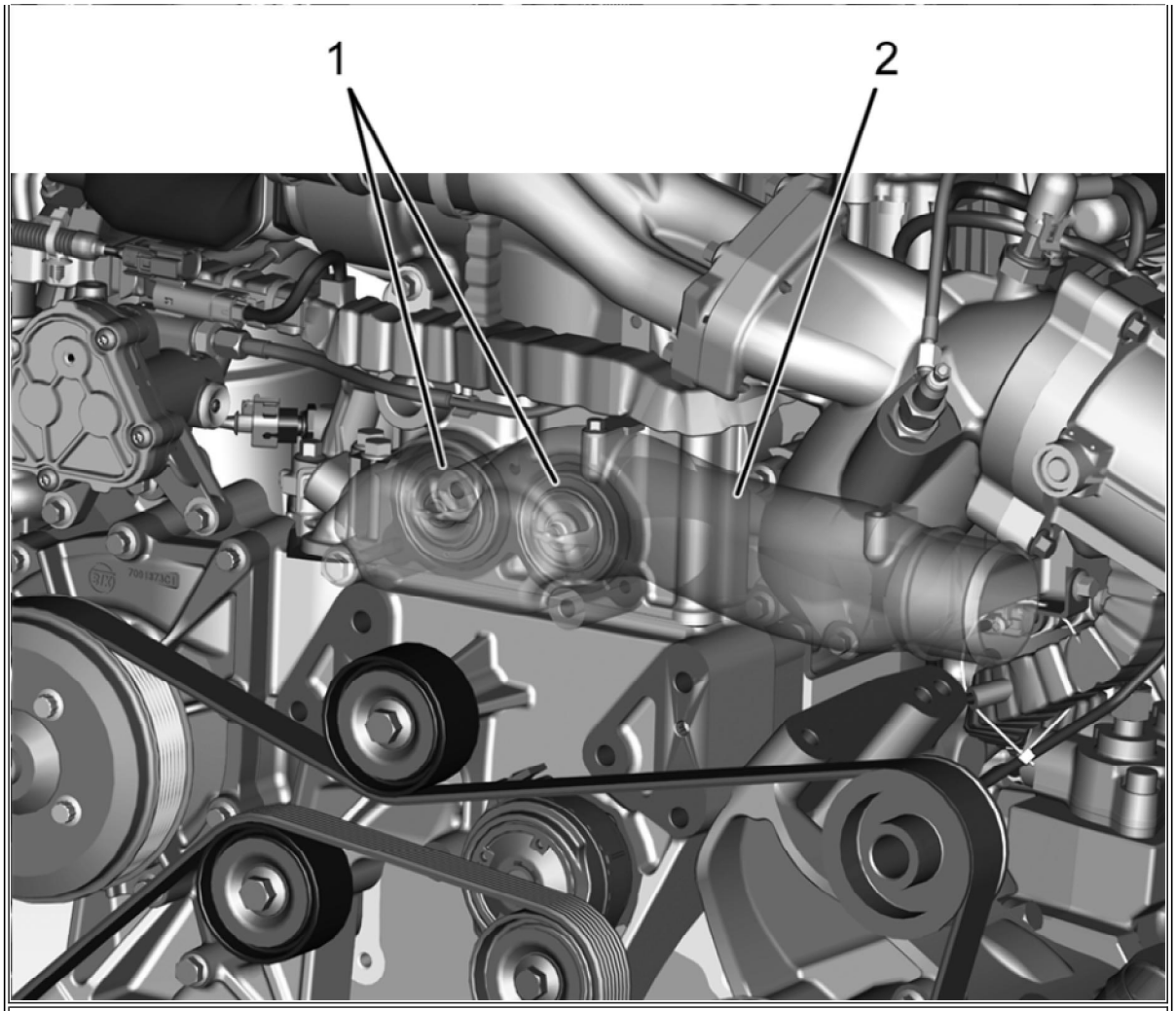


**Figure 3: Thermostat Housing**

Item 1: Thermostats
Item 2: Thermostat Housing

3. Remove thermostat housing (**Figure 3,** Item 2) and thermostats (**Figure 3,** Item 1)

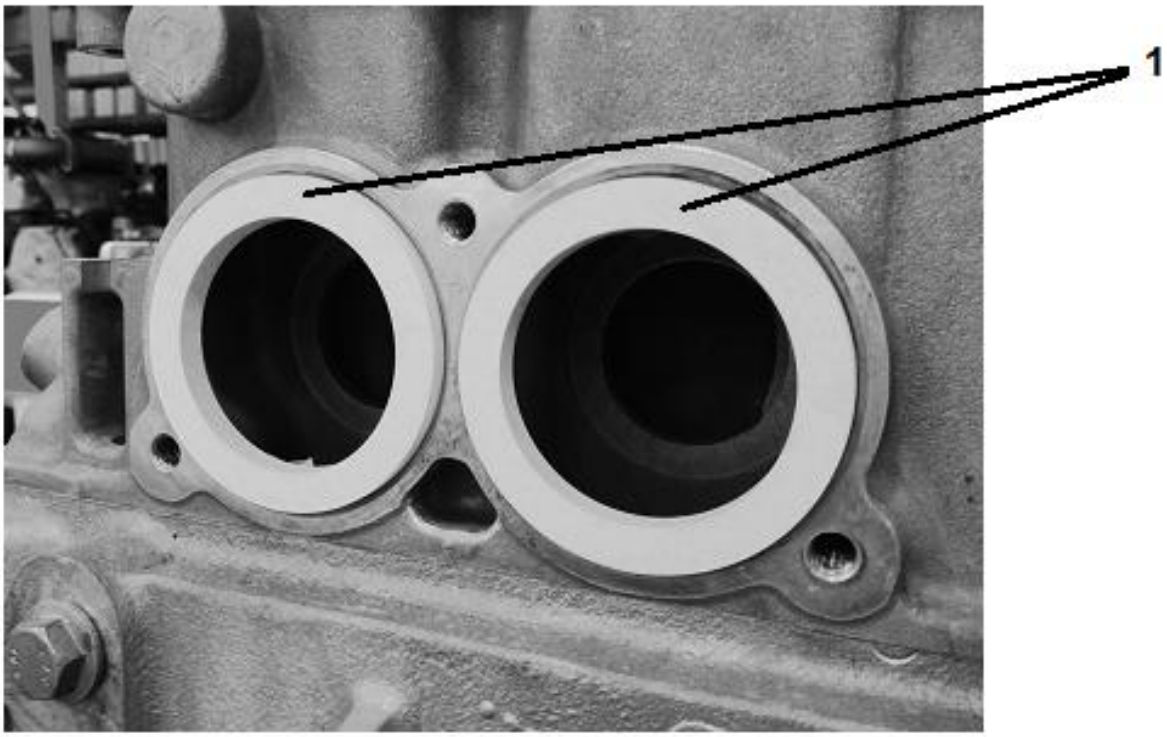


**Figure 4: Gasket Installation**

Item 1: Gaskets (09-889-02-05

4. Install two rubber gaskets (**Figure 4,** Item 1) and re-install thermostat housing (**Figure 3,** Item 2) and radiator hoses

5. Pressurize coolant system with shop air and drain contaminated fluid from radiator into a drain pan

NOTE:

**If contaminated fluid is too thick to drain out of radiator drain valve, remove radiator lower hose.**

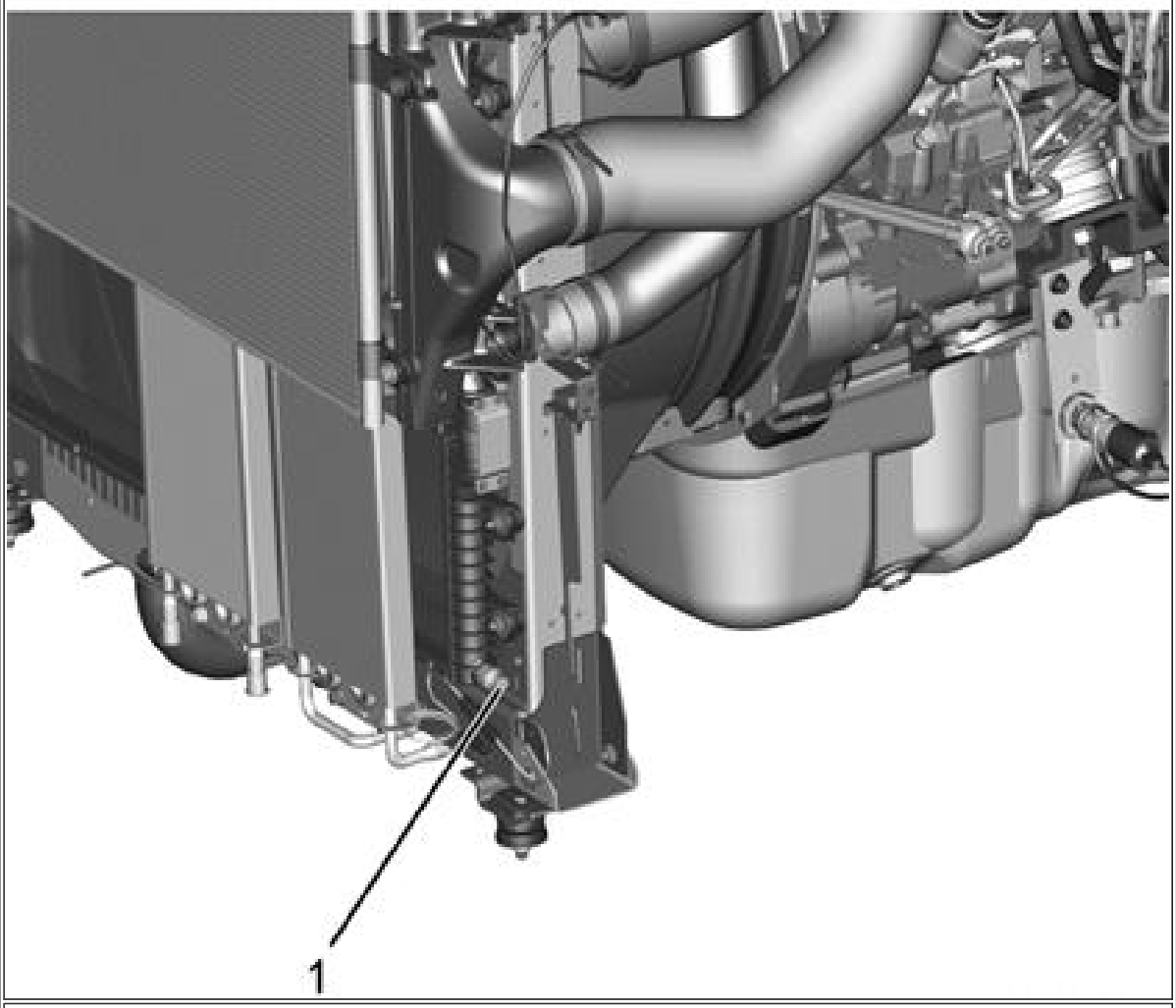


**Figure 5: Low-Temperature Radiator (LTR) Drain Coupler**

Item 1: LTR Drain Coupler (3688493C2)

**NOTE:**

**If LTR radiator drain coupler is not installed, install LTR drain coupler**

6. Connect radiator discharge hose (**Figure 2,** Item 2) onto low-temperature radiator (LTR) drain coupler (**Figure 5,** Item1)

7. Pressurize coolant system with shop air and drain contaminated fluid from LTR into drain pan

**Only** perform steps 8 - 10 if equipped with a coolant filter

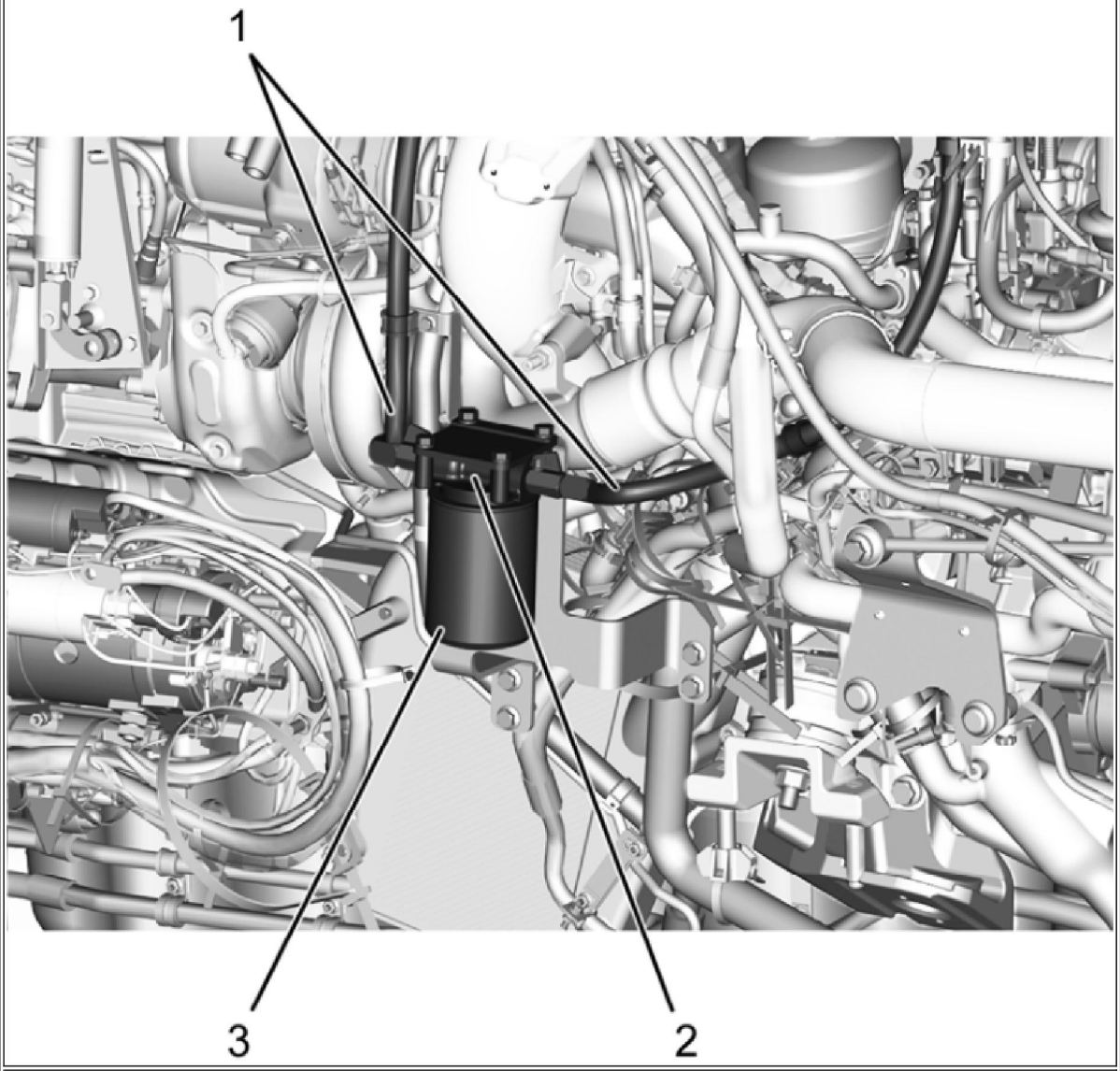


**Figure 6: Coolant Filter Assembly**

Item 1: Filter Clamp Locations
Item 2: Coolant Filter Housing
Item 3: Coolant Filter

8. Remove and discard coolant filter (**Figure 6,** Item 3) from housing (**Figure 6,** Item 2) - Clean housing

9. Install fitting (09-889-02-07) into hoses and dissconnect from coolant filter

10. Vacuum fill coolant system with 2.5 gal. of Engine System Cleaner and 15 gal. of water using the Coolant Management System (KL5007NAV)

11. Start engine and run for approximately 30 - 45 minutes at 1200 rpm

12. Shut down engine and REPEAT steps 5 - 11 as needed

## Low Temperature Radiator (LTR) and Engine Flush

**NOTE:**

**Prior to flushing, water and cleaner mixture should be heated to 115°F (46°C) minimum. Use hot water if available.**

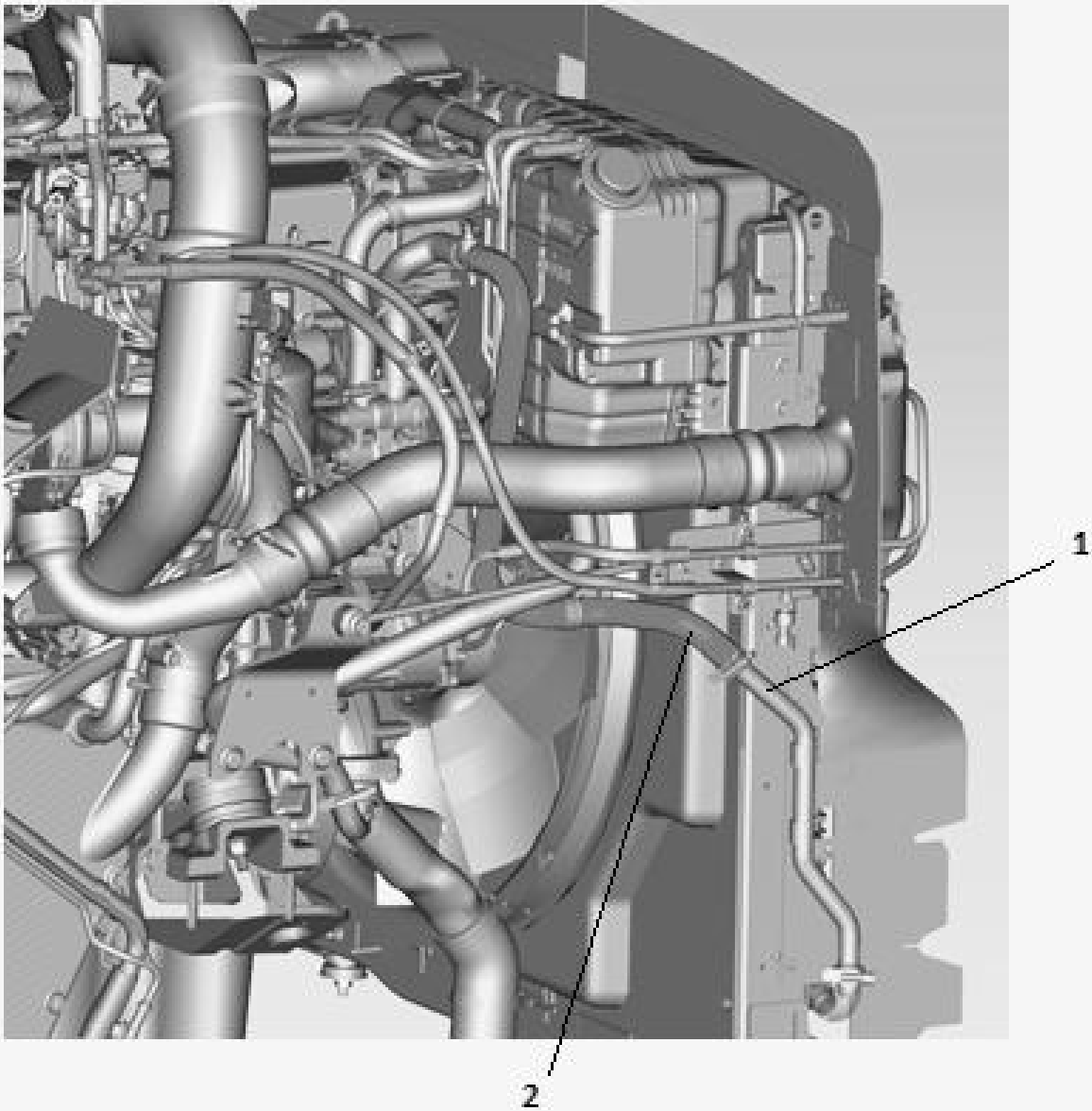


**Figure 7: Low Temperature Radiator Tube and Coolant Control Valve Hose**

Item 1: LTR Lower Tube
Item 2: Coolant Control Valve (CCV) Hose

1. Disconnect the hose illustrated above (**Figure 7**, Item 2) and install two small coolant flush adapters

2. Using cap (**Figure 8**, Item 4), cap off adapter installer on Coolant Control Valve Hose (**Figure 7**, Item 2)

**Figure 8: Dearation Tank**

Item 1: Deareation Tank
Item 2: Deaeration Tank Adapter (09-889-02-03)
Item 3: Cleaning Management System Hose
Item 4: Cap (12-353-01-06)

3. Install Deaeration Tank Adapter (**Figure 8**, Item 2) onto deaeration tank (**Figure 8**, Item 1)

4. Connect Cleaning Management System (12-353-01A) hoses to adapters and run for approxmiately 15 minutes, flushing the engines coolant system

5. Reverse the hoses and run Cleaning Management System (12-353-01A) for an additional 15 minutes

**NOTE:**

**Check condition of fluid, if fluid has a dark "blackish" color, empty contents and fill with 15 gallons of water and 2.5 gallons of Engine System Cleaner.**

## Radiator and Engine Flush

**NOTE:**

**Prior to flulshing, water and cleaner mixture should be heated to 115°F (46°C) minimum. If available, fill container with hot water.**

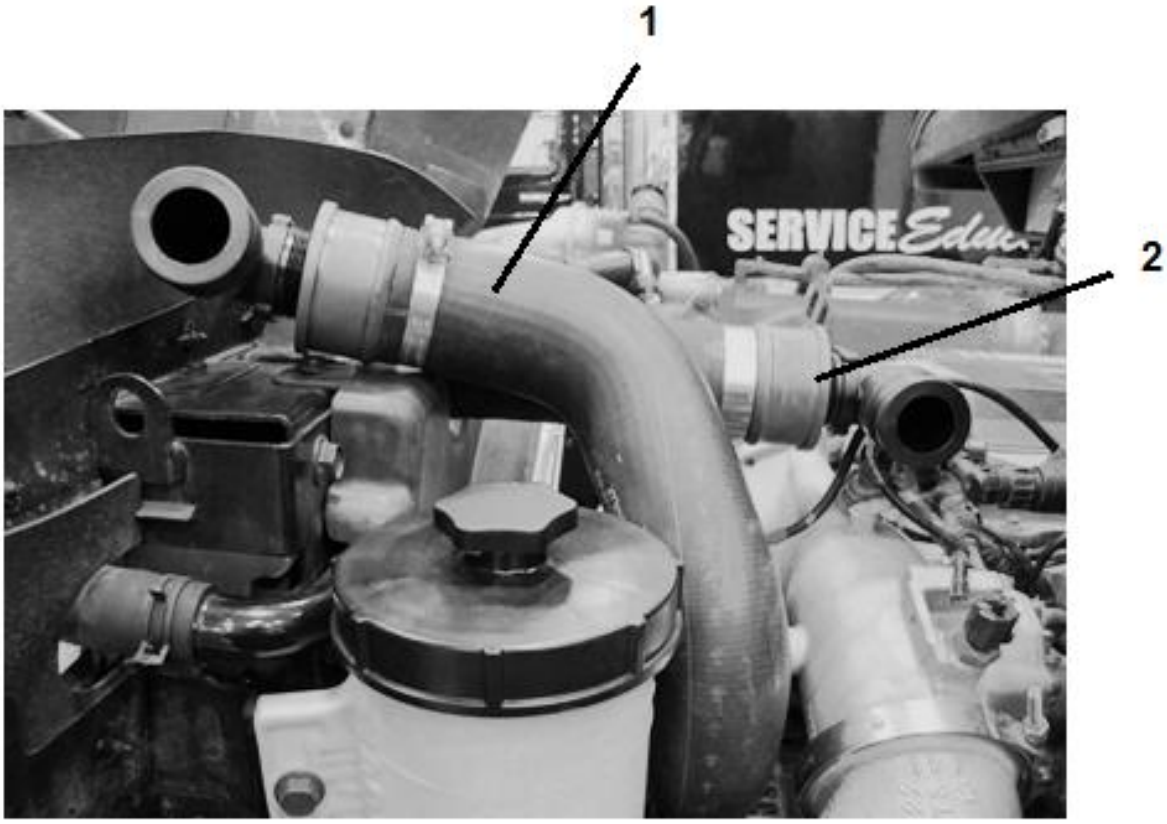


**Figure 9: Upper Radiator Hose**

Item 1: Thermostat Housing Hose
Item 2: Large Coolant Flush Adapter (09-889-02-01)

1. Disconnect upper radiator hose and install both Large Coolant Flush Adapters

2. Connect Cleaning Management System (12-353-01A) hoses to adapters and flush for 15 minutes

3. Reverse the hoses and run Cleaning Management System (12-353-01A) for an additional 15 minutes

**NOTE:**

**Check condition of fluid, if fluid has a dark "blackish" color, empty contents and fill with 15 gallons of water and 2.5 gallons of Engine System Cleaner.**

## Heater Core and DEF Hose Flush

**NOTE:**

**Prior to flushing, water and cleaner mixture should be heated to 115°F (46°C) minimum. Use hot water if available**

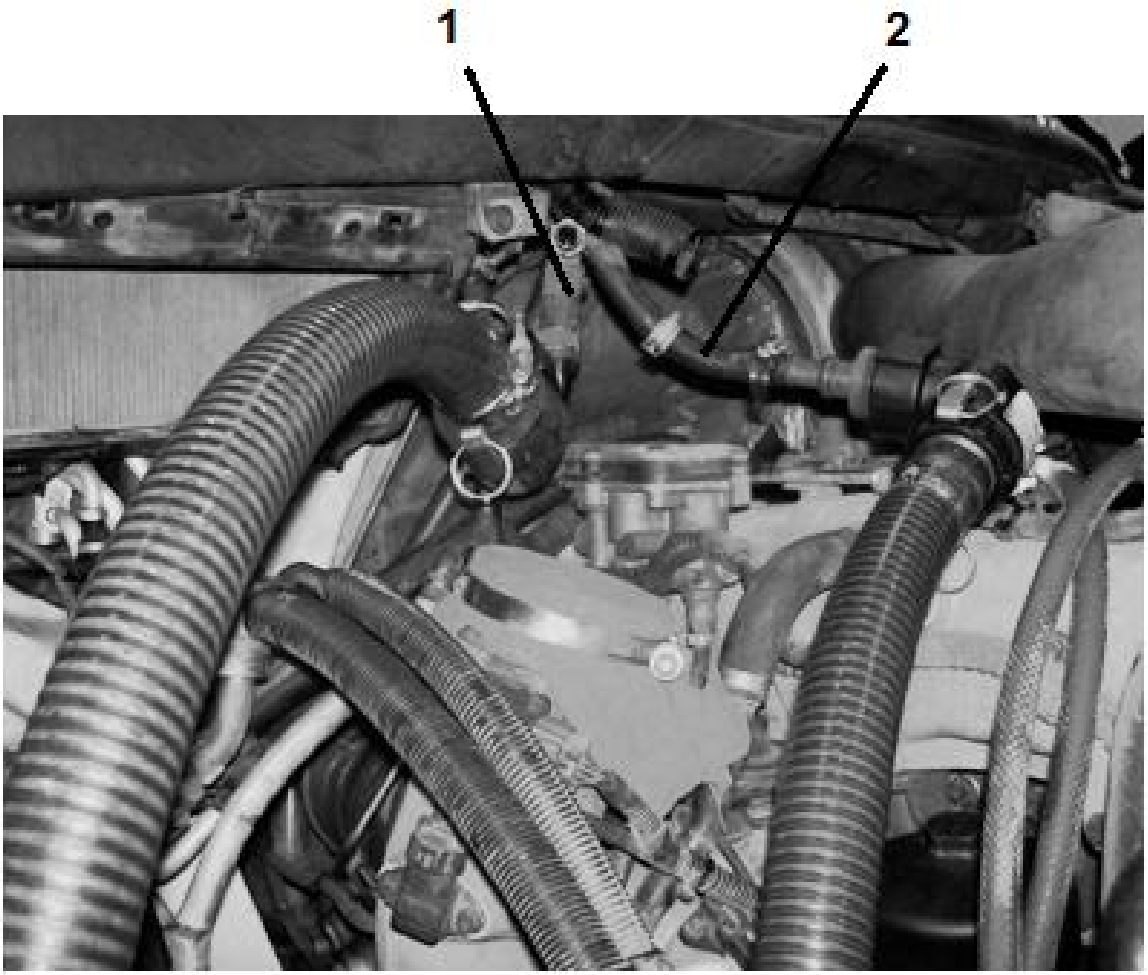


**Figure 10: Heater Core and DEF Hoses**

Item 1: Inlet Hose
Item 2: Outlet Hose

1. Disconnect Heater Core Hoses and install Small Coolant Flush Adapters

2. Connect Cleaning Management System (12-353-01A) hoses to adapters and flush for 15 minutes

3. Reverse the hoses and run Cleaning Management System (12-353-01A) for an additonal 15 Minutes

4. Repeat steps 1 thru 3 while flushing the DEF hoses and Auxillary Heater Core if applicable

**NOTE:**

**Check condition of fluid, if fluid has a dark "blackish" color, empty contents and fill with 15 gallons of water and 2.5 gallons of Engine System Cleaner.**

**NOTE:**

**When flushing the DEF hoses (if applicable) you will need to override the DEF Solenoid to flush the DEF hoses completely. Please see the steps below to open the DEF Solenoid**

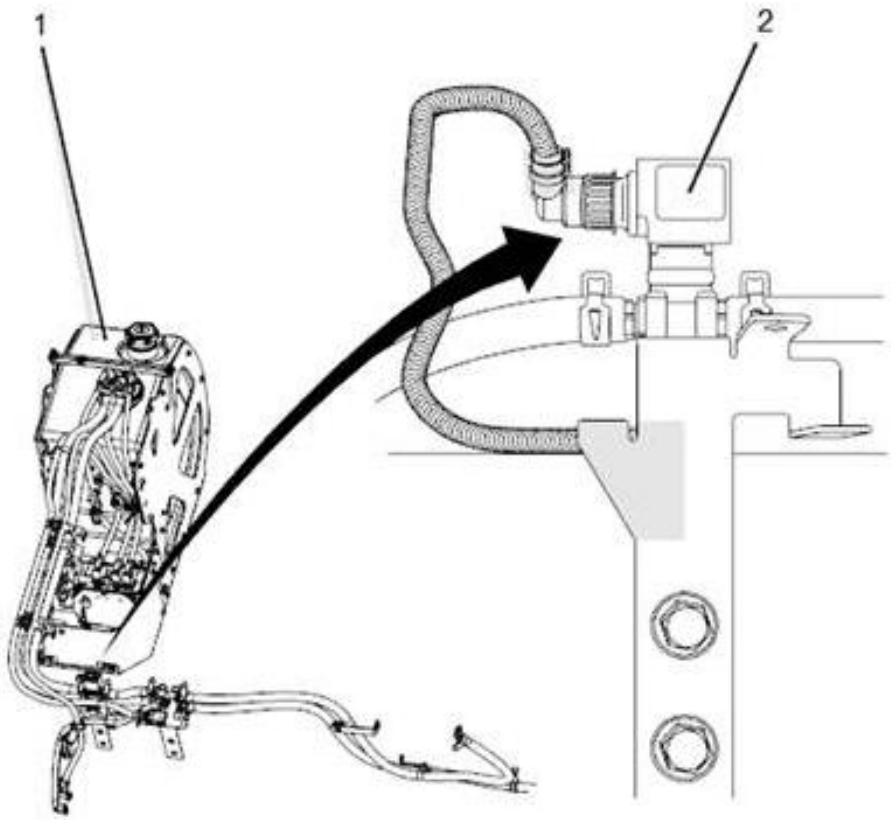


**Figure 11: DEF Solenoid Location**

Item 1: Diesel Exhaust Fluid (DEF) Tank
Item 2: Diesel Exhaust Fluid Tank Heater Valve (DEFTHC)

1. Located the DEFTHC, and disconnect the electrical connection

2. Connect ZTSE4827 (breakout harness), leave harness side disconnected

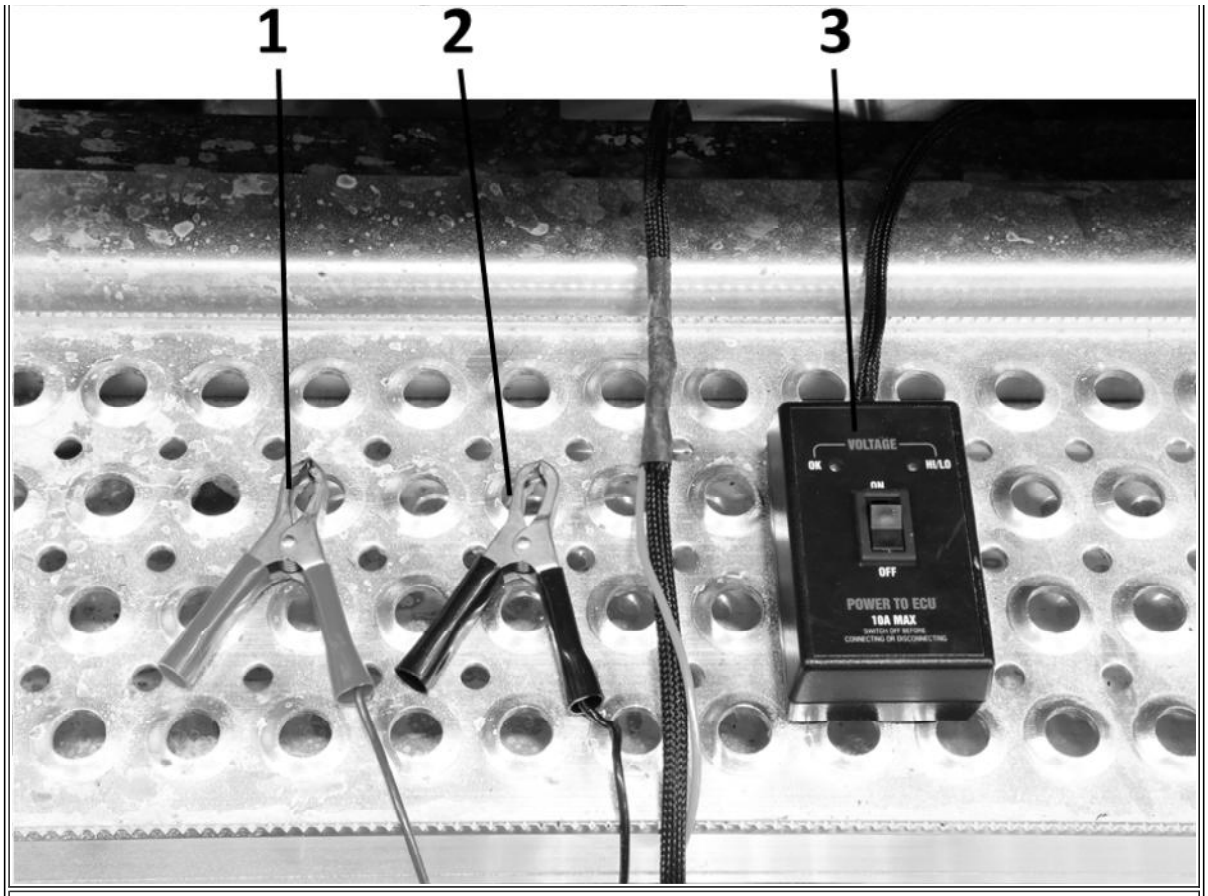


**Figure 12: ECM Programming Harness (406010)**

Item 1: Positive Cable Hookup
Item 2: Ground Cable Hookup
Item 3: 12 Volt Supply

3. Hook up 406010 using terminal kit ZTSE4435C

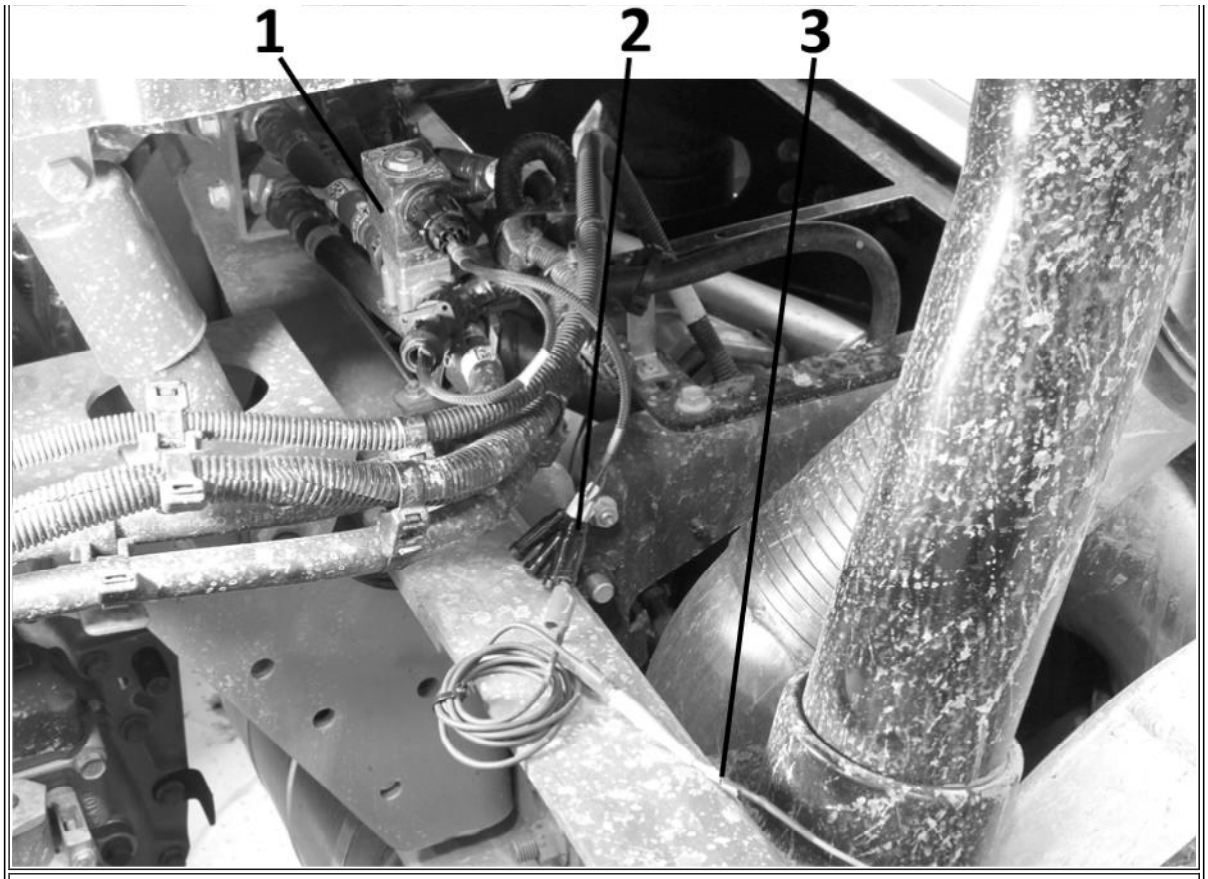


**Figure 13: ECM Programming Harness**

Item 1: Diesel Exhaust Fluid Tank Heater Valve (DEFTHC)
Item 2: ZTSE4827 (breakout harness)
Item 3: Power/Signal from 12 volt supply

4. When hooking up jumpers, power (coming from 12volt supply box) will be #1 on the ZTSE4827 breakout harness and ground will be #4 on the breakout harness

5. When ready to flush the DEF Lines, switch the 12 volt supply switch to the ON position.

## Final Rinse

1. Ensure all hoses are connected and backfill cooling system with water using appropriate fill procedure found in IK0900017

2. Start engine and run for approximatley 30 - 45 minutes at 1200 rpm

3. Shut down engine and drain (repeat steps 1 - 3 as needed until clear fluid comes out)

**NOTE:**

**If there are still traces of oil left in the cooling system, replace all rubber hoses for cooling system as they may soaked with oil and repeat flushing procedures as necessary.**

4. Remove rubber gaskets by removing the thermostat housing

5. Replace the thermostats using new parts

6. Re-connect all loose hoses and connections

7. Use cooling system fill procedure outlined in IK0900017 and fill with appropriate coolant

## WARRANTY INFORMATION

**Warranty Claim Coding:**

| | |
|---|---|
| **Group:** | 12000 - Engine |
| **Noun:** | 686 - Cooler, Oil |

**Standard Repair Time(s):**

| Description | Chassis | SRT | Hours |
|---|---|---|---|
| Cooling System, Flush | ProStar Sleeper | R09-1022U-21 | 9.8 |
| Cooling System, Flush | ProStar Daycab | R09-1022U-22 | 9.1 |
| Cooling System, Flush | 7600 | N09-1022U-21 | 9.1 |
| Cooling System, Flush | Transtar | Q09-1022U-21 | 9.1 |
| Cooling System, Flush | 5000 | T09-1022U-21 | 9.1 |
| Cooling System, Flush | CAT CT660 | TC09-1022U-21 | 9.1 |

## OTHER RESOURCES

Master Service Information Site
MaxxForce® 11 and 13 Engine Diagnostic Manual (EPA 10, HD-OBD) Revision 8 (Supersedes EGES-470)
MaxxForce® 11 and 13 Engine Service Manual (EPA 10), Revision 6, (Supersedes EGES-465)
MaxxForce® 11 and 13 (EPA 07) Engine Diagnostic Manual (Revision 2)
MaxxForce® 11 and 13 (EPA 07) Engine Service Manual (Revision 2)

Hide Details

Feedback Information

Viewed: 969
Helpful: 9
Not Helpful: 0

No Feedback Found

Copyright © 2015 Navistar, Inc.