Service Bulletin

Mazda North American Operations
Irvine, CA 92618-2922

© 2014 Mazda Motor of America, Inc.

Subject:	Bulletin No: 09-038/14
DASHBOARD UPPER PANEL STICKY SURFACE AND/OR WARPING	Last Issued: 09/09/2014

APPLICABLE MODEL(S)/VINS

2010-2013 Mazda3 vehicles with VINs between:

- Dashboard Sticky Surface - JM1 BL ****** 1000001 to 325492 (before May 7, 2010).
- Dashboard Warping - JM1 BL ****** 325493 to 778739 (before January 12, 2013).

DESCRIPTION

Some customers may complain about either of the following concerns:

a. The dashboard upper panel is sticky.

Dashboard Upper Panel Sticky Surface

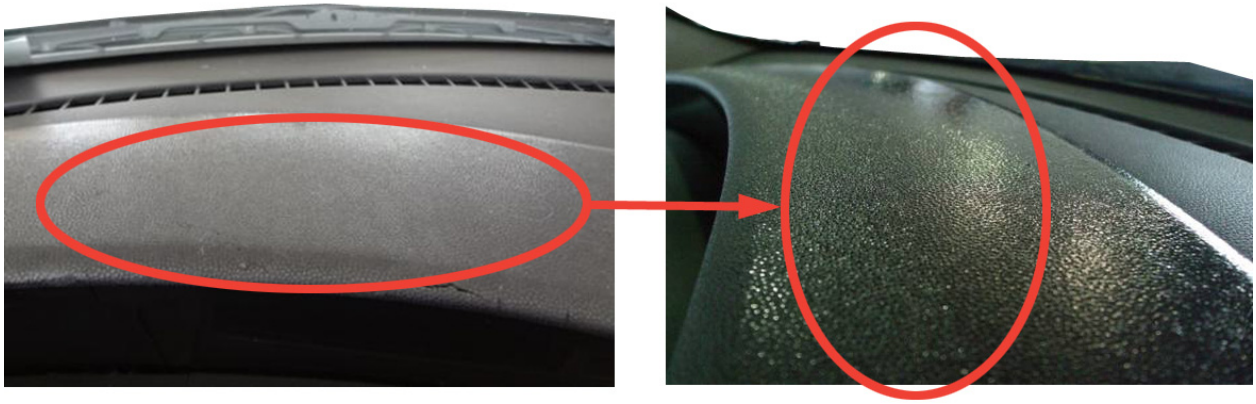

CONSUMER NOTICE: The information and instructions in this bulletin are intended for use by skilled technicians. Mazda technicians utilize the proper tools/equipment and take training to correctly and safely maintain Mazda vehicles. These instructions should not be performed by "do-it-yourselfers." Customers should not assume this bulletin applies to their vehicle or that their vehicle will develop the described concern. To determine if the information applies, customers should contact their nearest authorized Mazda dealership. Mazda North American Operations reserves the right to alter the specifications and contents of this bulletin without obligation or advance notice. All rights reserved. No part of this bulletin may be reproduced in any form or by any means, electronic or mechanical---including photocopying and recording and the use of any kind of information storage and retrieval system ---without permission in writing.

© 2014 Mazda Motor of America, Inc.

b. The dashboard upper panel just above the information display (A) is warping, generating a gap (B).

Dashboard Upper Panel Warping

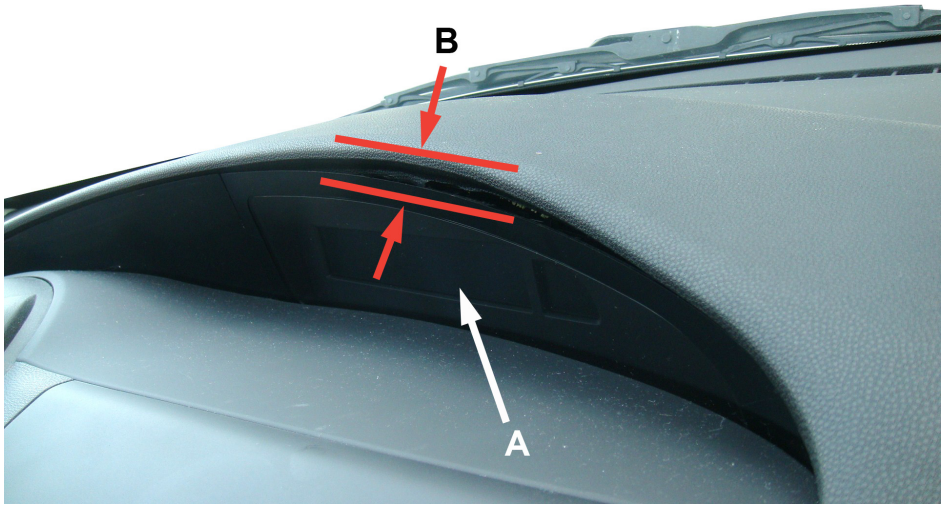

Customers having this concern should have their vehicle repaired using the following repair procedure.

REPAIR PROCEDURE

NOTE: A dashboard upper panel removal video has been developed to assist you with repairs. Viewing the video prior to the repair will give you a better understanding of the dashboard upper panel removal.

CLICK HERE to view the dashboard upper panel removal video.

1. Verify customer concern.
2. Remove the dashboard upper panel (A). Refer to MS3 online or Workshop Manual (section 09-17 DASHBOARD UPPER PANEL REMOVAL/INSTALLATION).

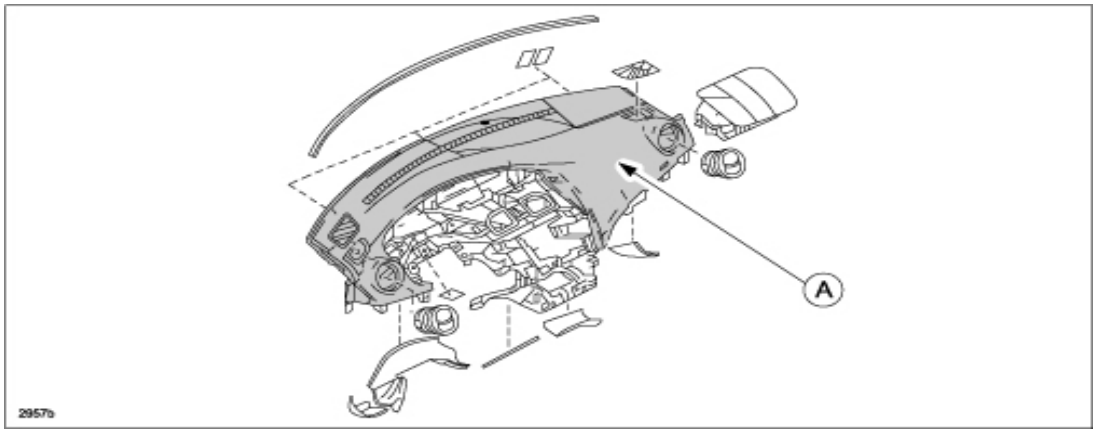

© 2014 Mazda Motor of America, Inc.

3. Remove the installation bolt for the passenger – side air bag module.

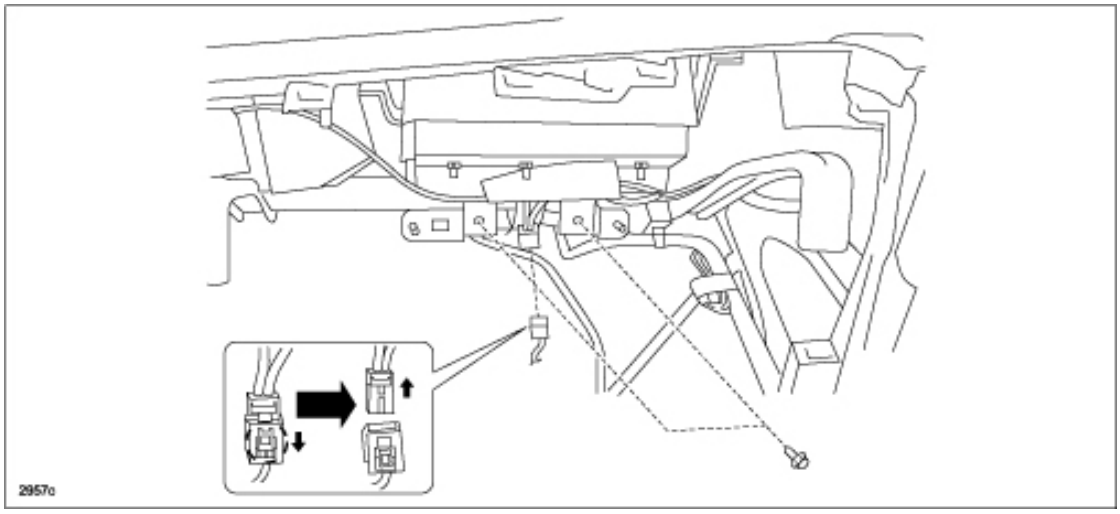

4. Disconnect the connector of the passenger – side air bag module.
5. Remove the screws from the dashboard upper panel (B).

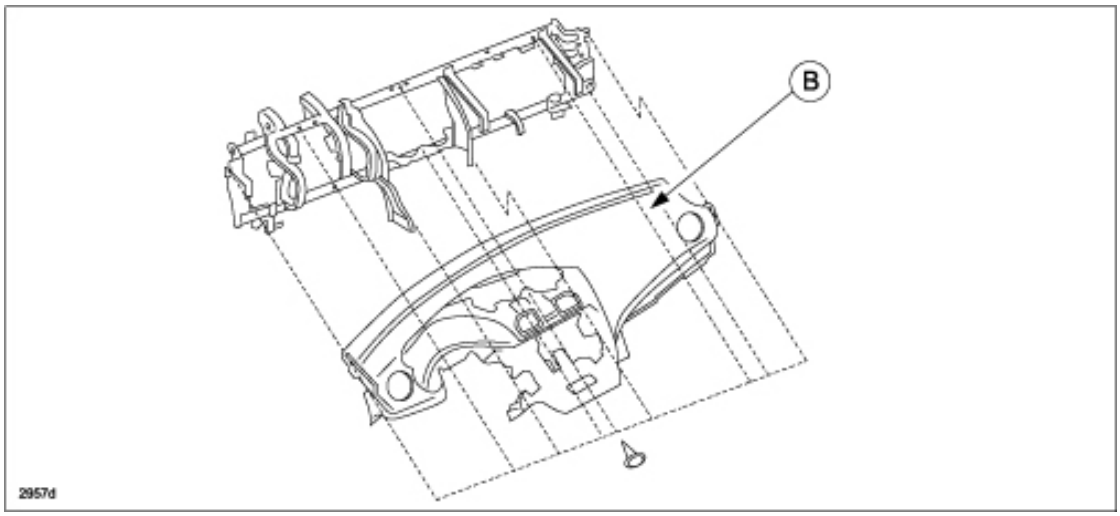

© 2014 Mazda Motor of America, Inc.

Detach the harness clips of the dashboard upper panel as shown in the below figure (with full-auto air conditioner).

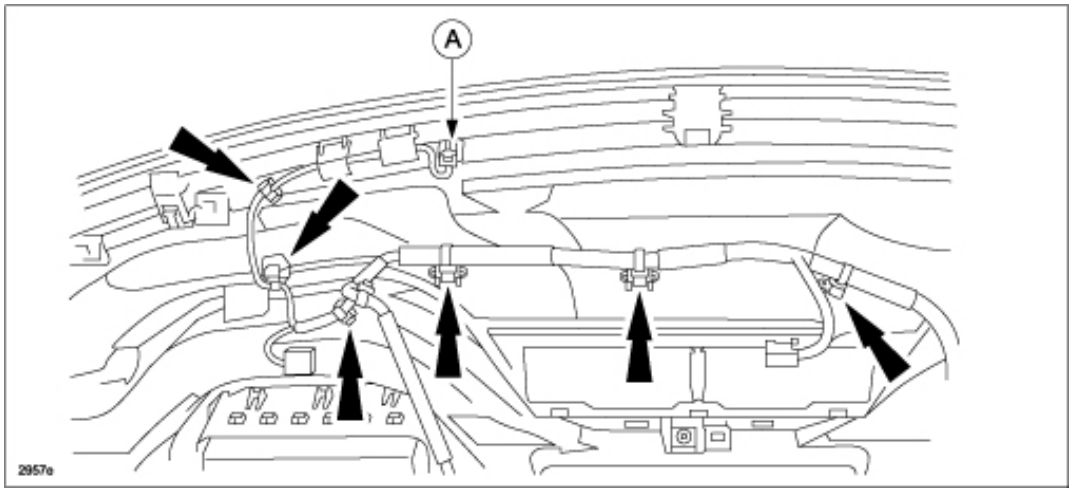

6. Disconnect the solar radiation sensor (with full-auto air conditioner) connector (A).
7. Remove the solar radiation sensor (with full-auto air conditioner).
8. Remove the dashboard upper panel from dashboard upper panel frame.
9. Remove the passenger – side air bag module.
10. Install in the reverse order of removal.
11. Verify repair.

© 2014 Mazda Motor of America, Inc.

PART(S) INFORMATION

Part Number	Description	Qty.	Notes
BBM4-60-400H-02	Dashboard	1	---
BBY0-55-180	Spacer Set	1	For dashboard
D651-68-162A	Clip	2	For A-pillar trim if needed
9YA0-11-004	Bolt	1	For steering wheel if needed
B455-32-099B	Shaft Bolt	1	For steering shaft if needed

WARRANTY INFORMATION

NOTE:

- This warranty information applies only to verified customer complaints on vehicles eligible for warranty repair.
- This repair will be covered under Mazda's New Vehicle Limited Warranty term.
- Additional diagnostic time cannot be claimed for this repair.

Warranty Type	A
Symptom Code	87
Damage Code	9B
Part Number Main Cause	BBM4-60-400H-02
Quantity	1
Operation Number / Labor Hours:	XXK86XRX / 1.7 Hrs.