Service Bulletin

Mazda North American Operations
Irvine, CA 92618-2922

© 2014 Mazda Motor of America, Inc.

Subject: SIDE(S) OF REAR SEAT CUSHION IS LIFTING OR LOOSE	**Bulletin No:** 09-024/14
	Last Issued: 05/27/2014

APPLICABLE MODEL(S)/VINS

2014-15 Mazda3 vehicles

DESCRIPTION

Some customers may complain that the side(s) of the rear seat is lifting or loose when lifted by hand.

Seat is lifting

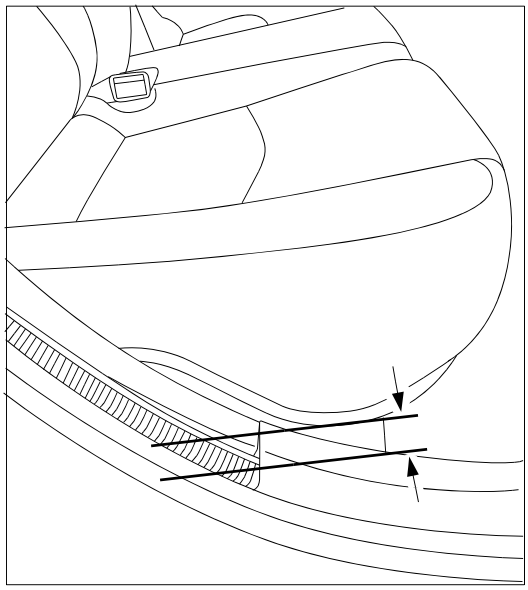

2916a

Seat is loose when lifting by hand

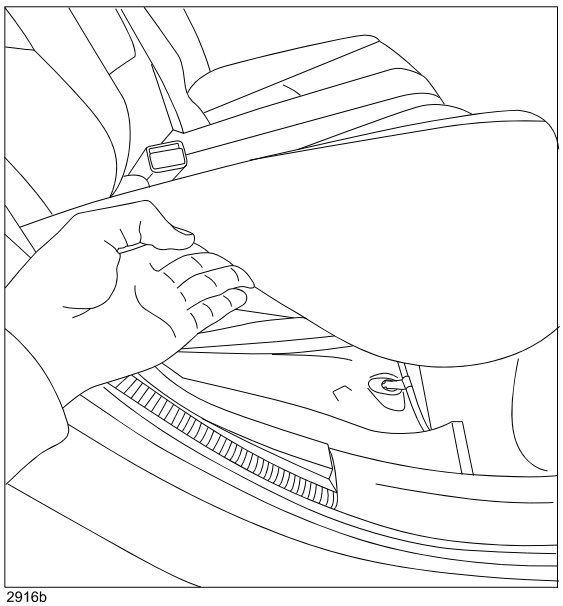

2916b

This is caused by a product variation of the rear seat cushion. Some cushions may have a larger clearance between the cushion and the floor carpet.

Customers having this concern should have their vehicle repaired using the following repair procedure. When you receive a customer complaint on this concern, fix both sides of the rear seat cushion to the carpet using Velcro tape.

CONSUMER NOTICE: The information and instructions in this bulletin are intended for use by skilled technicians. Mazda technicians utilize the proper tools/equipment and take training to correctly and safely maintain Mazda vehicles. These instructions should not be performed by “do-it-yourselfers.” Customers should not assume this bulletin applies to their vehicle or that their vehicle will develop the described concern. To determine if the information applies, customers should contact their nearest authorized Mazda dealership. Mazda North American Operations reserves the right to alter the specifications and contents of this bulletin without obligation or advance notice. All rights reserved. No part of this bulletin may be reproduced in any form or by any means, electronic or mechanical---including photocopying and recording and the use of any kind of information storage and retrieval system ---without permission in writing.

REPAIR PROCEDURE

1. Verify customer concern.
2. Remove the rear seat cushion from the vehicle according to the instructions on MS3 online or the Workshop Manual (section 09-13 REAR SEAT CUSHION REMOVAL/INSTALLATION).
3. Turn over the rear seat cushion and confirm the locations to attach the Velcro tapes as shown.
   A: C-rings (to fix seat trim end)
   B: Resin wire at the trim end

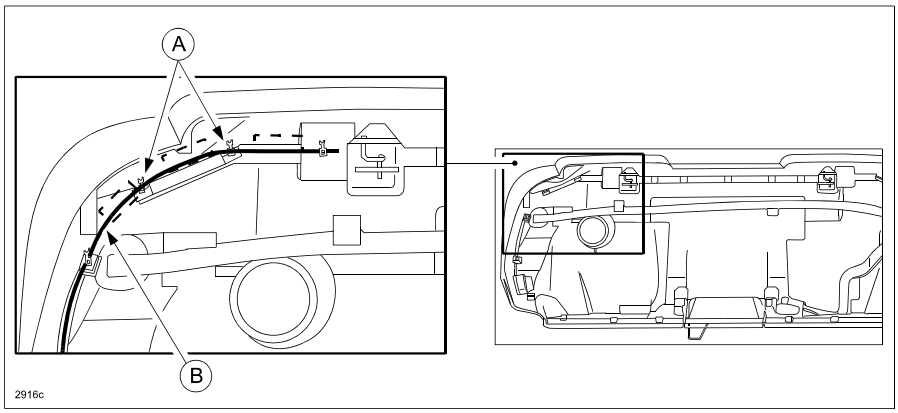

4. Attach 3 Velcro tapes (BHY1-88-472) in the locations shown.
   C: Attach the Velcro tape to the side of the the C-ring
   D: Attach the Velcro tapes to the center of the C-rings.

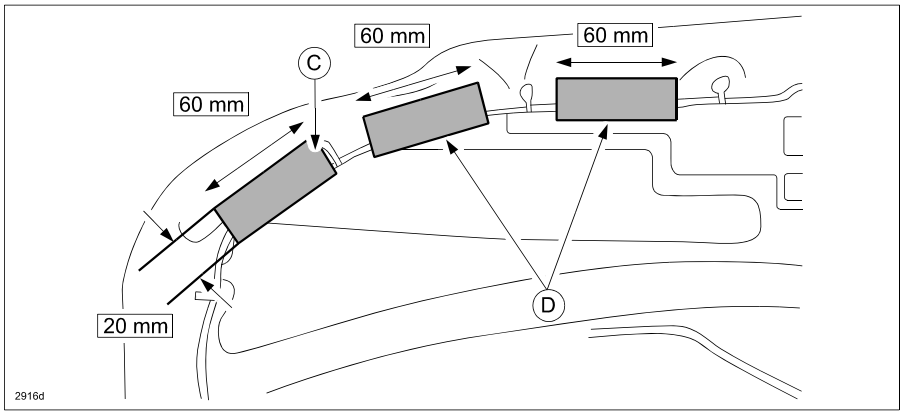

Attach the Velcro tape as shown in this cross section.
E (Cushion side): Attach the Velcro tape by turning it over at the trim end (resin wire)
F (Carpet side): Attach 20 mm of Velcro tape on the front surface and the remaining on the back

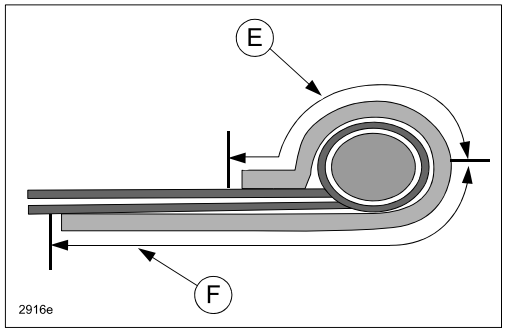

5. Attach Velcro tapes to the opposite side of the rear seat cushion using the same procedure.
6. Attach two layers of felt (BHY1-88-093) to the bottom front edge of the rear seat cushion (A) as shown.

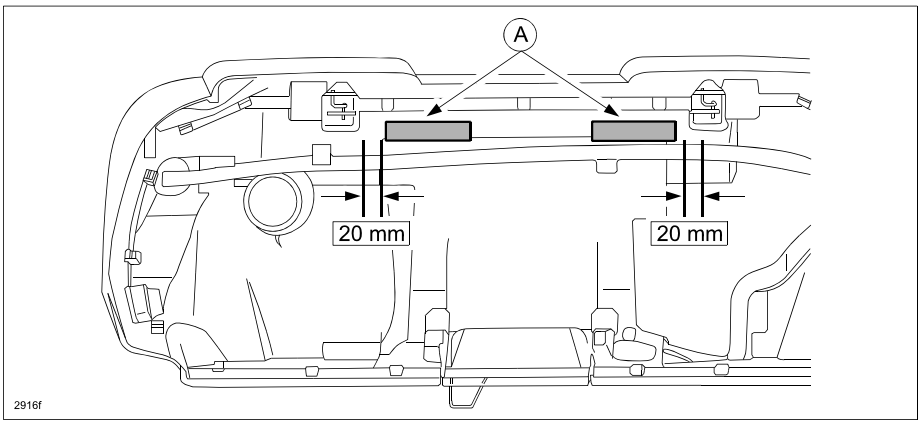

7. Install the rear seat cushion in the reverse order of removal.
8. Push both sides of the rear seat cushion down by hand to fix the Velcro tapes to the floor carpet.

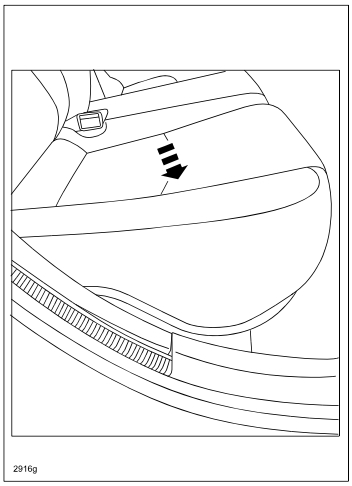

9. Verify repair.

PART(S) INFORMATION

Part Number	Description	Qty.	Notes
BHY1-88-472A	Velcro Tape	6	60x30mm; requires 6 pieces per repair
BHY1-88-093	Felt	2	120x30mm x 30mm thickness (2 pieces in box); requires 2 sets (4 pieces) per repair

© 2014 Mazda Motor of America, Inc.

WARRANTY INFORMATION

NOTE:

- This warranty information applies only to verified customer complaints on vehicles eligible for warranty repair.
- This repair will be covered under Mazda's New Vehicle Limited Warranty.
- Additional diagnostic time cannot be claimed for this repair.

Warranty Type	A
Symptom Code	89
Damage Code	97
Part Number Main Cause	****-57-200*** (Rear seat cushion) See EPC for correct part number
Quantity	0
Operation Number / Labor Hours:	XXK5EXRX / 0.3 Hrs.

NOTE: Submit BHY1-88-093 and BHY1-88-472A as related part number.