Countries:	AUSTRALIA, BAHAMAS, BOLIVIA, BELIZE, CANADA, CHILE, TAIWAN, COLOMBIA, COSTA RICA, DOMINICAN REPUBLIC, ECUADOR, EL SALVADOR, TRINIDAD AND TOBAGO, UNITED STATES, URUGUAY, VENEZUELA, MEXICO, ARUBA, NICARAGUA, PERU, PUERTO RICO, Curaçao, GUAM, GUATEMALA, GUYANA, HAITI, HONDURAS, JAMAICA, KOREA, SOUTH KOREA, NEW ZEALAND, PANAMA	**Document ID**:	IK0800130
Availability:	ISIS, FleetISIS	**Revision**:	10
Major System:	ELECTRICAL SYSTEM	**Created**:	3/3/2008
Current Language:	English	**Last Modified**:	12/29/2014
Other Languages:	Français, Español,	**Author**:	Joe Christopher
Viewed:	14537		

Less Info

Hide Details

Coding Information

Copy Link	Copy Relative Link	Bookmark	Add to Favorites	Print	Provide Feedback	Helpful	Not Helpful
		View My Bookmarks				1955	2789

Title: **Air Pressure Gauges and A/C Pressure Transducer Troubleshooting on Post-2007 HPV and ProStar**

Applies To: **2007 and later ProStar and NGV**

DESCRIPTION

The air pressure transducers and the A/C pressure transducer run off of the same 5 volt reference supply from the Body Controller (BC). There is only one 5 volt source inside the Body Controller and that 5 volt source supplies voltage to three pins: E4, E6 & E8. These pins are all on the 1602 (J5) connector of the Body Controller. A short to ground on any of these three outputs will cause all three pins to lose their voltage. Usually the first thing that people notice when there is a problem with the 5 volt reference circuits is that the air pressure guages or the A/C quit working. That does not mean however, that the problem is in those circuits. It could be in any of the three circuits. You need to keep this in mind when troubleshooting these issues.

SYMPTOMS

- Air Gauges inop.
- A/C inop.

POSSIBLE DIAGNOSTIC TROUBLE CODES

Signal	B/C Pin	SPN	FMI	Description	Action
Service_Brake_App_Air_Sensor_Signal	1600-B14	116	0	Brake Application Pressure Sensor Reading Above Normal Range	Open Circuit Between B/C 1600-B14 and Air Application Transducer 1822-C
Service_Brake_App_Air_Sensor_Signal	1600-B14	116	1	Brake Application Pressure Sensor Reading Below Normal Range	Shorted Circuit Between B/C 1600-B14 and Air Application Transducer 1822-C
Primary_Air_Sensor_Raw_Signal	1600-B2	1087	0	Primary Air Tank Sensor Reading Above Normal Range	Open Circuit Between B/C 1600-B2 and Primary Air Pressure Transducer 1811-C
Primary_Air_Sensor_Raw_Signal	1600-B2	1087	1	Primary Air Tank Sensor Reading Below Normal Range	Shorted Circuit Between B/C 1600-B2 and Primary Air Pressure Transducer 1811-C
Secondary_Air_Sensor_Raw_Signal	1600-B3	1088	0	Secondary Air Tank Sensor Reading Above Normal Range	Open Circuit Between B/C 1600-B3 and Secondary Air Pressure Transducer 1812-C
Secondary_Air_Sensor_Raw_Signal	1600-B3	1088	1	Secondary Air Tank Sensor Reading Below Normal Range	Shorted Circuit Between B/C 1600-B3 and Secondary Air Pressure Transducer 1812-C

SIGNALS TO WATCH

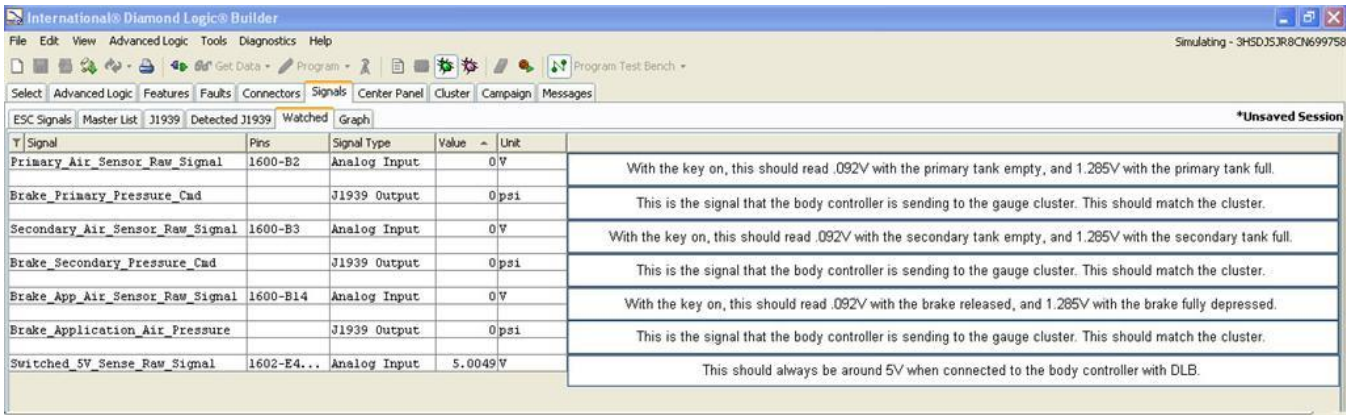

TROUBLESHOOTING

1. Check and record the DTC's using DLB, not the cluster. For info on doing this properly, see IK2600036.
2. Check ignition and accessory voltage to the Body Controller. For info on doing this, see IK0800092.
3. The primary, secondary, air application & Air pressure transducers all use the same 5v reference. So a problem in one circuit can effect them all. If more than one Gauge is affected, there may be a problem in the 5v ref. circuit. Connect breakout box, turn the key on and check the voltage on pin E4 of the 1602(J5) connector at the BC. If you have 0v or close to it, the most likely cause is a short to ground on the 5v ref. circuit. This could be in any of the three 5v ref circuits out of pins E4, E6 or E8. The air pressure guage 5v reference circuit is pictured in green in the diagram below.
4. If you do have 5v in step 3 above then you need to check for 5v with the key on at pin B of the transducer that you are having problems with. This will tell you if the 5v are reaching the transducer.

   Primary, Secondary, and Air Application Readings at the Body Controller.

Voltage Reading at B/C	B/C Status	PSI Reading
0	2	Out of Range Low
0.092	1	0
1.285	0	140
5.0	2	Out of Range High

5. **Air Pressure Transducer Checks**:
   a. If you do not have 5v at pin B in step 4 above, check the resistance between pin E4 of the 1602(J5) connector and pin B at the pressure transducer you are losing with the key off. This is checking the 5 volt ref wire between the BC and the transducer. You should have 0 ohms or very close to it. If you are reading OL, then you have an open in that circuit.
   b. If you have 5v at pin B in step 4 above, check resistance between pin E5 of the 1602(J5) connector and pin A at the air pressure transducer you are losing with the key off. This is checking the zero volt ref wire between the BC and the transducer. You should have 0 ohms or very close to it. If you are reading OL, then you have an open in that circuit.
   c. Check resistance between pin B2 of the 1600(J3) connector and pin C of the **primary air pressure transducer**. You should have 0 ohms or very close to it. If you are reading OL, then you have an open in that circuit. This is checking the return wire from the transducer to the BC.
   d. Check resistance between pin B3 of the 1600(J3) connector and pin C of the **secondary air pressure transducer**. You should have 0 ohms or very close to it. If you are reading OL, then you have an open in that circuit. This is checking the return wire from the transducer to the BC.
6. **A/C Pressure Transducer Checks:**
   a. If you do not have 5v at pin B in step 4 above, check the resistance between pin E6 of the 1602(J5) connector and pin B at the A/C pressure transducer with the key off. This is checking the 5 volt ref wire between the BC and the transducer. You should have 0 ohms or very close to it. If you are reading OL, then you have an open in that circuit.
   b. If you have 5v at pin B in step 4 above , check resistance between pin E5 of the 1602(J5) connector and pin A at the A/C pressure transducer with the key off. This is checking the zero volt ref wire between the BC and the transducer. You should have 0 ohms or very close to it. If you are reading OL, then you have an open in that circuit.
   c. Check resistance between pin B12 of the 1600(J3) connector and pin C of the A/C pressure transducer. You should have 0 ohms or very close to it. If you are reading OL, then you have an open in that circuit. This is checking the return wire from the transducer to the BC.

CIRCUIT DIAGRAMS

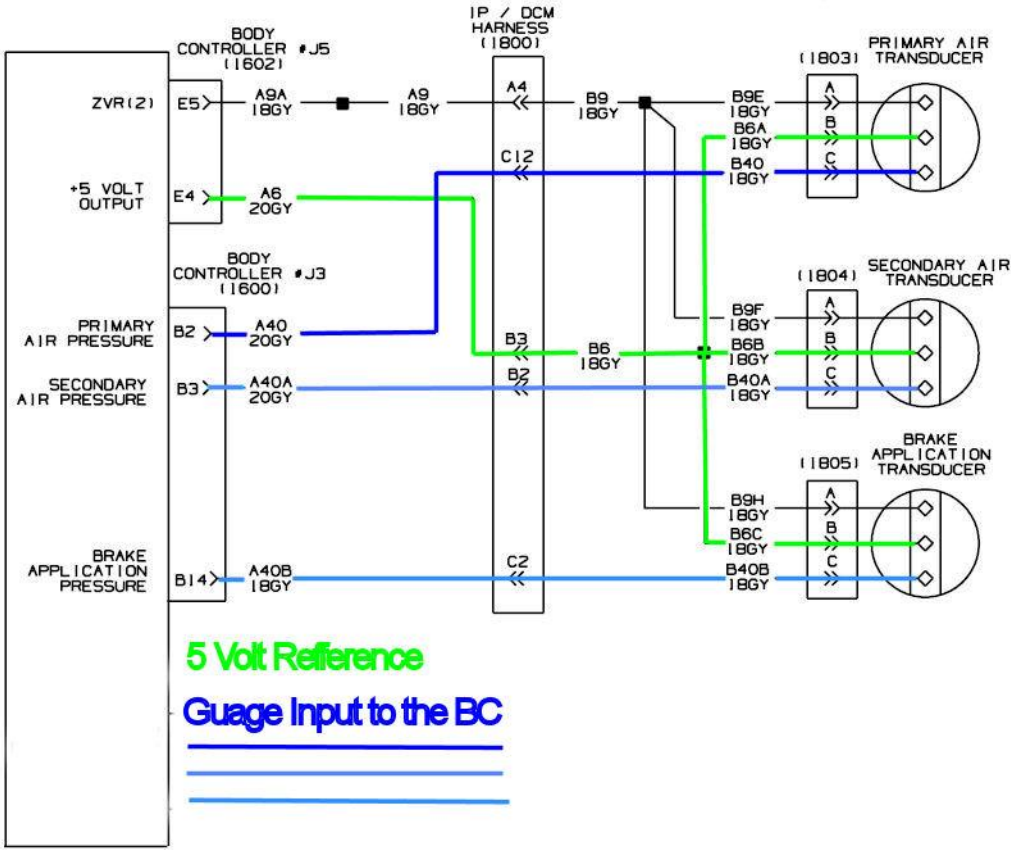

- S08322 Chapter 8, Page 6 Medium Duty Air Pressure Guage Circuits
- S08302 Chapter 8, Page 1 (ProStar) Air Pressure Guage Circuits
- S08337 Chapter 12, Page 3 Medium Duty A/C Pressure Transducer Circuits
- S08302 Chapter 12, Page 1 ProStar A/C Pressure Transducer Circuits

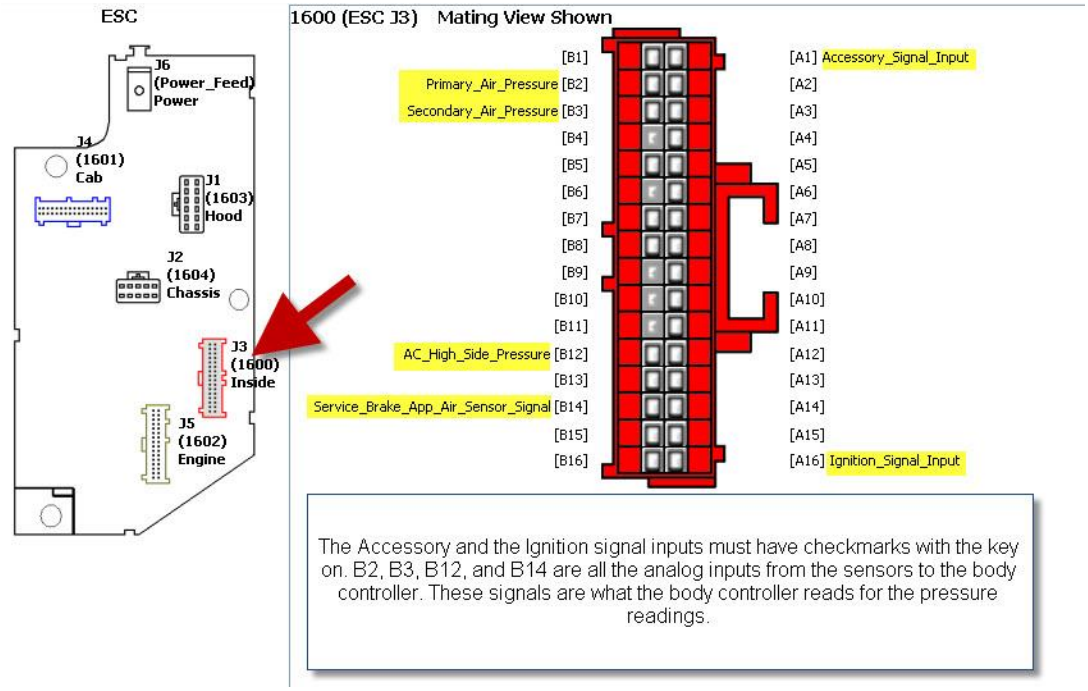

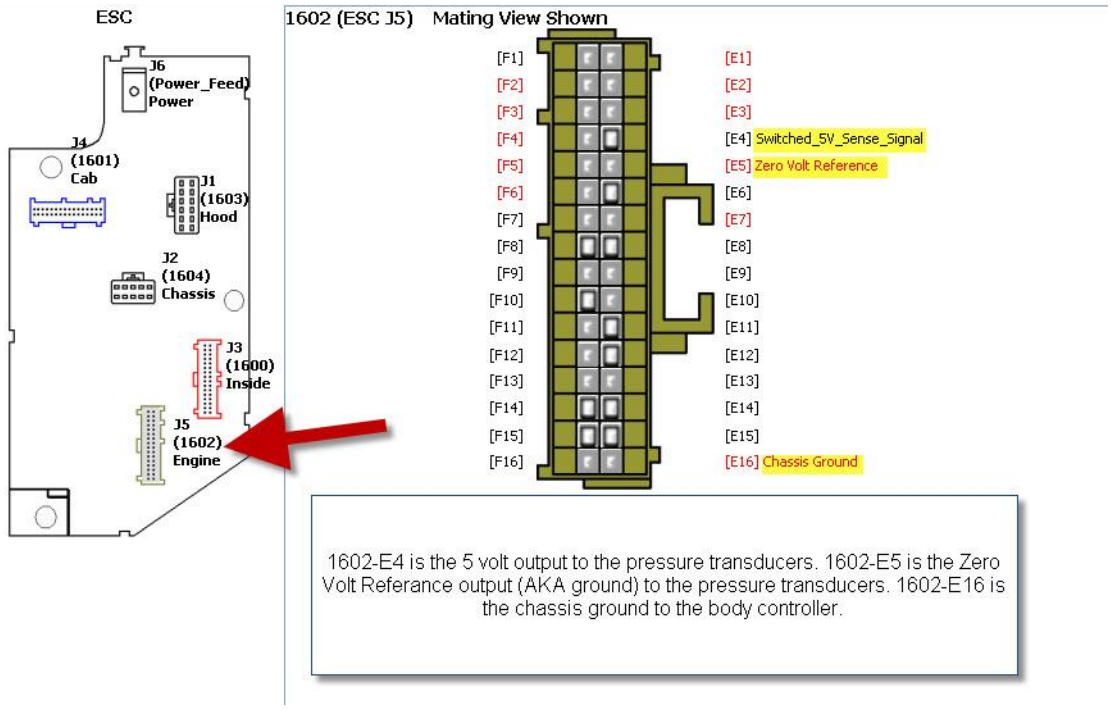

1602-E4 is the 5 volt output to the pressure transducers. 1602-E5 is the Zero Volt Referance output (AKA ground) to the pressure transducers. 1602-E16 is the chassis ground to the body controller.

Hide Details

Feedback Information

Viewed: 14536
Helpful: 1955
Not Helpful: 2789

No Feedback Found

Copyright © 2015 Navistar, Inc.