SB-10055537-3173

REFERENCE:	Nova Bus Manuals
SECTION:	08: Braking system
RS Nº:	MQR 7621-534
EFFECTIVE IN PROD.:	–

APPLICATION DEADLINE: NA

SUBJECT:	Rear axle brake system
JUSTIFICATION:	Irregular vehicle movement at very low speed

LEVEL	DESCRIPTION	DIRECT CHARGES		TIME
		LABOUR	MATERIAL	
1	Remove the rear axle brake drift valve	Client	Client	45 min
2	–	–	–	–

MATERIAL

QTY	PART Nº	REV.	DESCRIPTION	REPLACES PART N°
LEVEL 1				
1	0444626	–	Plug M-NPT-3/8	–
2	12010300	–	Cavity plug metri pack	–
1	15300002	–	2-pin connector Metri pack	–
20 in.	8861149	–	Tubing ½ in. diameter green color	–
2	N21529	–	Elbow 45 NTA-8, NPT-M-6	–
LEVEL 2				
–	–	–	–	–

DISPOSAL OF PARTS

REMOVED PARTS ARE:	DISCARDED *	RETAINED	* Dispose of the unused parts and the defective parts in accordance with local environmental standards in effect.
	Yes	–	

REVISION HISTORY

REV.	DATE	CHANGE DESCRIPTION	WRITTEN BY
NR	2014-AL15	Initial release	Wilder Galiano

APPROVED BY: Daniel Theriault

Digitally signed by Daniel Theriault
DN: cn=Daniel Theriault, o=Nova Bus, ou=Publication, email=daniel.theriault@volvo.com, c=CA
Date: 2014.04.08 13:19:11 -04'00'

CLIENT	ORDER	ROAD NUMBER		VIN (2NVY/4RKY...)		QTY
		FROM	TO	FROM	TO	
New York City Transit - New York	L536	1200	1201	S92U793000490	S92U993000491	2
New York City Transit - New York	L545	1202	1289	S92U5A4000001	S92U0A4000098	88
New York City Transit - New York	L643	5895	5895	S92U1B4000143	S92U1B4000143	1
New York City Transit - New York	L670	5770	5894	S92U4C4500024	S92U3B4000242	125
New York City Transit - New York	L681	5896	5283	S92U2C4500023	S92U9C4500195	122
New York City Transit - New York	L692	5284	5363	S92U3C4500158	S92U3D4500274	80

WARNING

Follow your internal safety procedures.

PROCEDURE

1.1. Locate the drift valve enclosure.

1.2. Remove the enclosure cover. Retain the hardware.

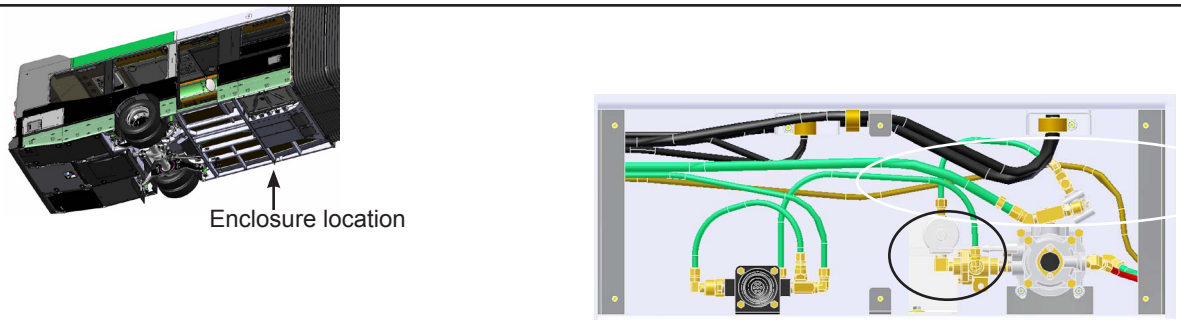

Figure 1 - Enclosure Location

1.3. Disengage the drift valve electric connector.

1.4. Install the 12010300 cavity plug into the 15300002 2-pin connector.

1.5. Install the 15300002 connector into the female harness connector.

Figure 2 - Harness Connector Weather Protection

1.6. Disconnect the air hoses connected to the drift valve and double relay valve.

1.7. Discard the hoses shown in Figure 3.

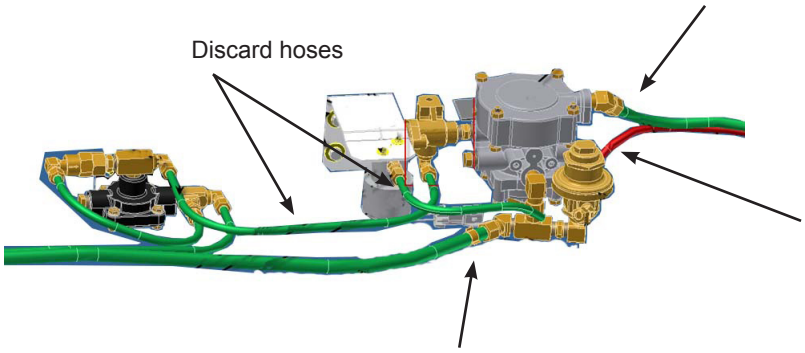

Figure 3 - Hoses to be Disconnected

1.8. Remove the bolts holding the double relay valve. Retain the hardware.

1.9. Remove the bolts holding the drift valve. Take out the assembly from the enclosure. Reinstall the hardware.

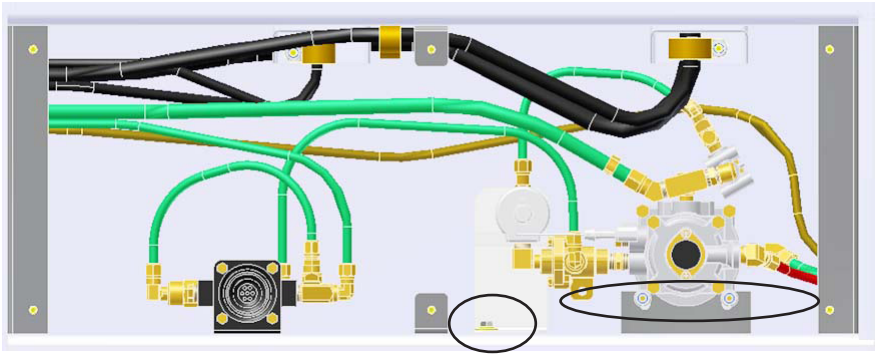

Figure 4 - Valve Assembly Removal

1.10. Remove the valve from the T connector.

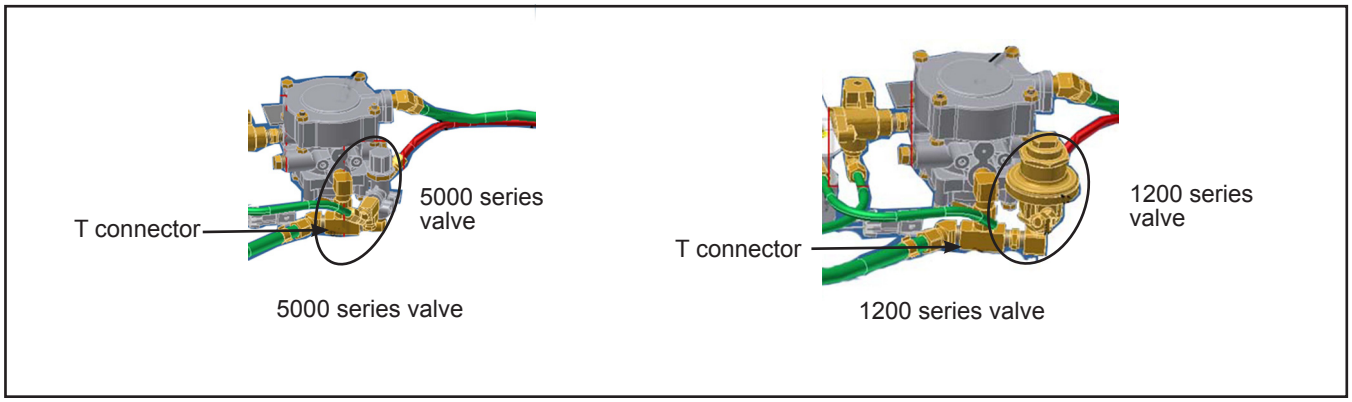

Figure 5 - Remove 1200 or 5000 Series Valve

1.11. Disassemble the drift valve from the double relay valve.

1.12. Discard the drift valve.

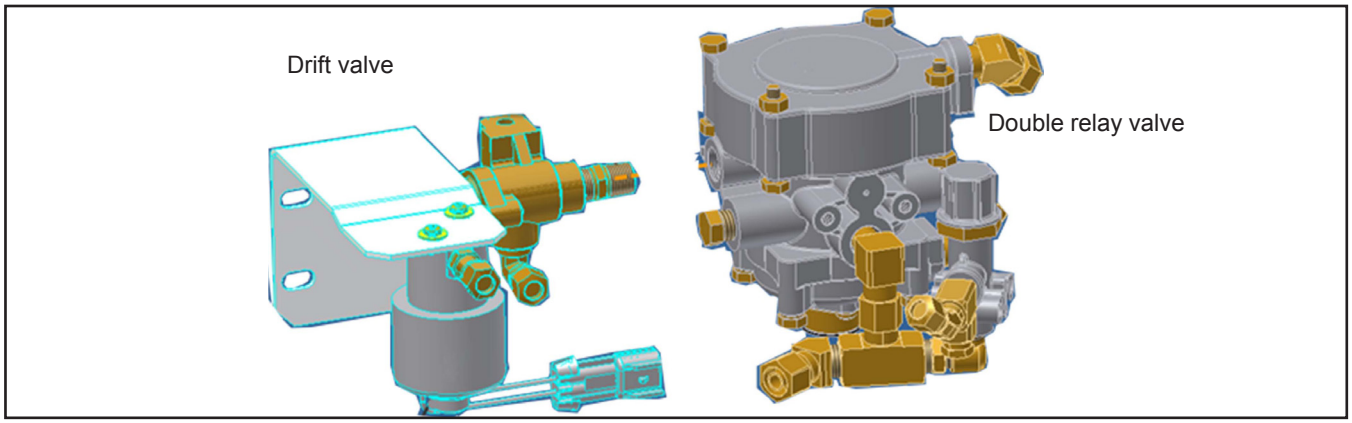

Figure 6 - Remove the Drift Valve

1.13. Install and tighten a 0444626 plug connector to the T connector.
1.14. Install a new N21529 connector to the double relay valve.
1.15. Install a new N21529 connector to the existing assembly.

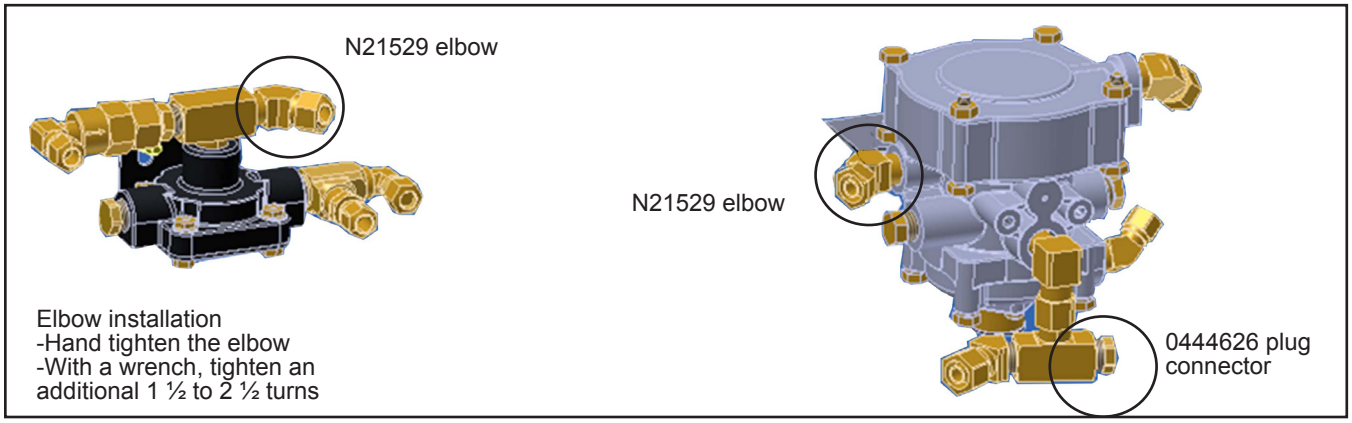

Figure 7 - Fittings Installation

1.16. Install the dual relay valve with the retained hardware in the enclosure.
1.17. Connect the three existing air hoses.

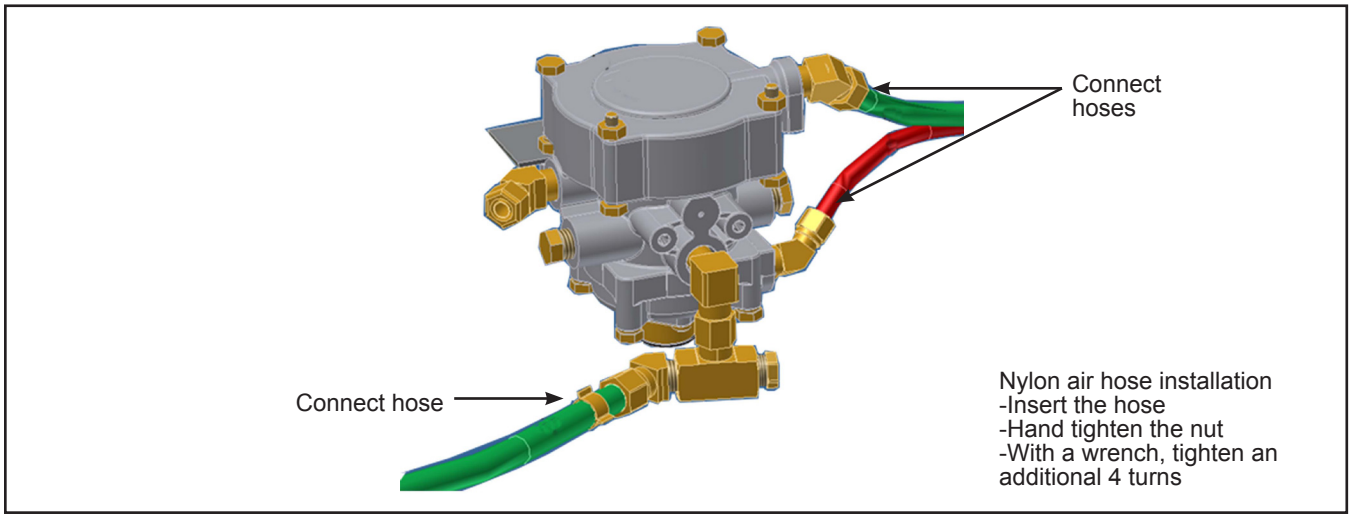

Figure 8 - Hoses Installation

1.18. Cut to size the 8861149 air hose that connects the next assembly to the double relay valve.
1.19. Connect the air hose.

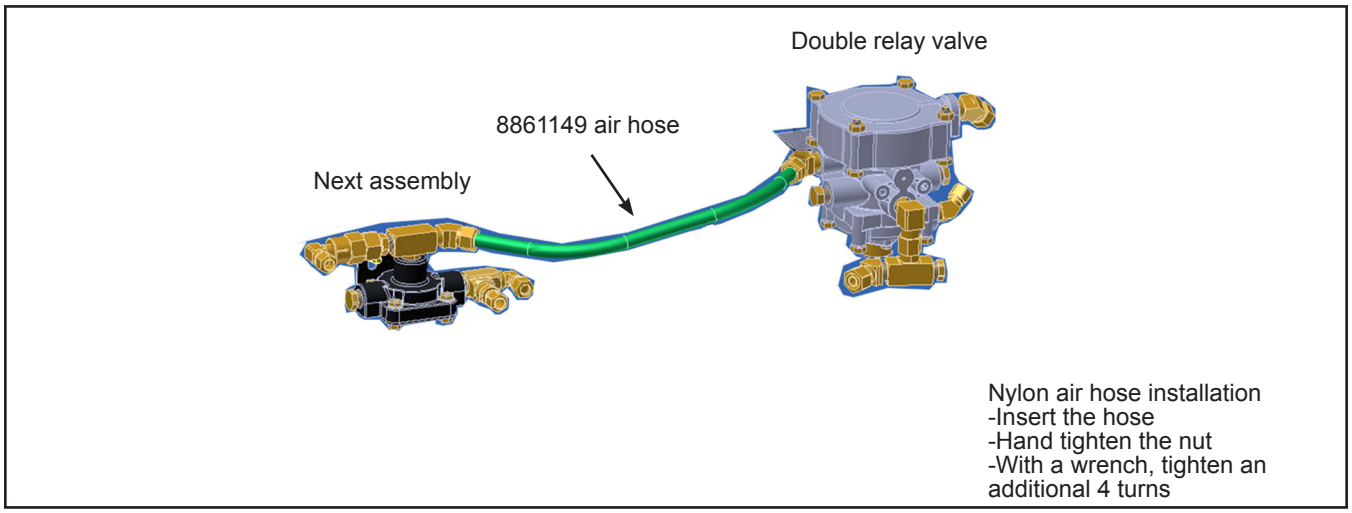

Figure 9 - New 8861149 Hose Installation

1.20. Test for any air leaks in the air hose installation before closing the compartment. Fix any air leaks.
1.21. Reinstall the enclosure cover with the retained hardware.❖