REFERENCE:	Nova Bus Manuals
SECTION:	11 Fuel tank
RS Nº:	MQR 7621-513
EFFECTIVE IN PROD.:	L735

APPLICATION DEADLINE:
2015MA15

SUBJECT:	Plastic fuel tank with auxiliary heater connections and with out fuel gauge.
JUSTIFICATION:	Install a new, more robust plastic fuel tank.

THIS DOCUMENT COVERS THE FUEL TANKS INSTALLED INTO VEHICLES MANUFACTURED IN 2011. ANOTHER SERVICE DOCUMENT WILL BE ISSUED IN 2015 TO COVER VEHICLES MANUFACTURED IN 2012.

LEVEL	DESCRIPTION	DIRECT CHARGES		TIME
		LABOUR	MATERIAL	
1	Replace the fuel tank.	Nova Bus	Nova Bus	5 h 20 min
2	–	–	–	–

MATERIAL

QTY	PART Nº	REV.	DESCRIPTION	REPLACES PART N°
LEVEL 1				
1	N8900599	–	Fuel tank cradle kit	–
1	N8900601	–	Routing hose auxiliary heater kit	–
1	N8900602	–	Routing drain radiator kit	–
1	N8900603	–	Filler neck kit	–
1	N95703-39	–	Return flexible hose	–
1	N95709-39	–	Supply flexible hose	–
1	N68192	–	Bracket fuel tank	–
2	N43774	–	Bolt M8x25 SS	–
1	N71632	–	Bolt mush sq	–
5	N55936	–	Nut FL M12	–
4	N39684	–	Screw M12 hexagon HD	–
4	N26738	–	Washer flat M12 SS Din 125A	–
2	N43774	–	Bolt M8x25 SS flange	–
2	N43233	–	Nut hex M8 flanged with insert	–
1	N72800	–	Dustpan rear curb side	–
1	N67816	C	Cradle fuel tank plastic	
1	N68117	A	Panel wood cradle fuel tank	
2	N68118	A	Panel wood cradle fuel tank	
1	N68119	A	Panel wood cradle fuel tank	
12 m (40 pi)	N71249		Tape foam 3/16" thk x 1" width	
1	N68088-02	–	Fuel tank	–

APPROVED BY:
Daniel Theriault
Digitally signed by Daniel Theriault
DN: cn=Daniel Theriault, o=Nova Bus, ou=Publication, email=daniel.theriault@volvo.com, c=CA
Date: 2014.02.10 17:20:40 -05'00'

LEVEL 2				
–	–	–	–	–

Materials will be available within 84 days. To order, please contact Prevo14+st Parts by phone at 1-800-771-6682, by fax at 1-888-668-2555 or by email at prevostparts.commandes@volvo.com. Specify document number, quantity of parts required and shipping address.

DISPOSAL OF PARTS

REMOVED PARTS ARE:	DISCARDED *	RETAINED	* Dispose of the unused parts and the defective parts in accordance with local environmental standards in effect.
	Yes	–	

REVISION HISTORY

REV.	DATE	CHANGE DESCRIPTION	WRITTEN BY
NR	2014FE05	Initial release	Wilder Galiano
R1	2014FE10	Fuel tank numero corrected in the french document only	Wilder Galiano

CLIENT	ORDER	ROAD NUMBER		VIN (2NVY/4RKY...)		QTY
		FROM	TO	FROM	TO	
Calgary Transit - Alberta	L624	—	—	L82U4B4000077	L82U6B4000078	2
Calgary Transit - Alberta	L637	8161	8171	L82U7B3000356	L82UXB3000366	11
Calgary Transit - Alberta	L637	8172	8180	L82U3B3000368	L82U2B3000376	9
Clemson Area Transit - South Carolina (ref L722)	L641	—	—	L82U1C4500005	L82U5C4500007	3
Clemson Area Transit - South Carolina (ref L722)	L641	—	—	L82U9C4500009	L82U5C4500010	2
Duke University - North Carolina (ref. L703)	L641	—	—	L82U9C4500012	L82U0C4500013	2
Duke University - North Carolina (ref. L703)	L641	—	—	L82U8C4500017	L82U1C4500022	6
Grand River Transit - GRT - Ontario	L599	—	—	L82X9B3000465	L82X2B3000467	3
Grand River Transit - GRT - Ontario	L631	—	—	L82X4B3000468	L82X2B3000470	3
Grand River Transit - GRT - Ontario	L633	21101	21115	L82U7B3000289	L82U8B3000303	15
Guelph - Ontario	L669	—	—	L82U9B3000536	L82U4B3000539	4
Regina - Saskatchewan	L639	645	654	L82U1B3000336	L82U2B3000345	10
Sault Ste-Marie Transit Services - Ontario (ref L686)	L641	135	135	L82U7C4500008	L82U7C4500008	1
Sault Ste-Marie Transit Services - Ontario (ref L686)	L641	139	139	L82U7C4500011	L82U7C4500011	1
Sault Ste-Marie Transit Services - Ontario (ref L686)	L641	136	138	L82U2C4500014	L82U6C4500016	3
Sudbury - Ontario	L632	811	817	L82U9B3000326	L82U4B3000332	7
Thunder Bay - Ontario	L614	—	—	L82UXB3000061	L82U3B3000063	3
Thunder Bay - Ontario	L662	—	—	L82U3B3000533	L82U7B3000535	3
Timmins - Ontario	L661	—	—	L82U9B3000486	L82U9B3000486	1

WARNING

Follow your internal safety procedures.

PROCEDURE

FUEL TANK ASSEMBLY

Use number N8900599 kit.

CONTENT OF KIT # N8900599			
QTY	**PART Nº**	**REV.**	**DESCRIPTION**
2	N75717		½ anchor rod
2	N75718		½ anchor rod
2	N75946		½ anchor rod
4	N68096		U-channel
2	N75714		U-channel with ½ rod
8	N75697		Locknut stover 1/2"-13UNC SS
8	N26738		Washer Flat M12 SS din 125A
2	N75857		Rod pin
2	N75858		Cotter pin
12	N25261		Screw cross recessed
12	N29781		Over size Washer M6 SS Gras Din 440R
12	N24407		Nut SS

1	N67816	C	Cradle fuel tank
1	N68117	A	Wood panel
2	N68118	A	Wood panel
1	N68119	A	Wood panel
12 m (40 pi)	N71249		Self-adhesive foam tape

1.1. Install wood panels on top of the cradle. Ensure that the wood panel with an opening is installed as shown in Figure 1.

1.2. Affix the wood panels with 12 N25261 bots, 12 N29781 washers and 12 N24407 nuts.

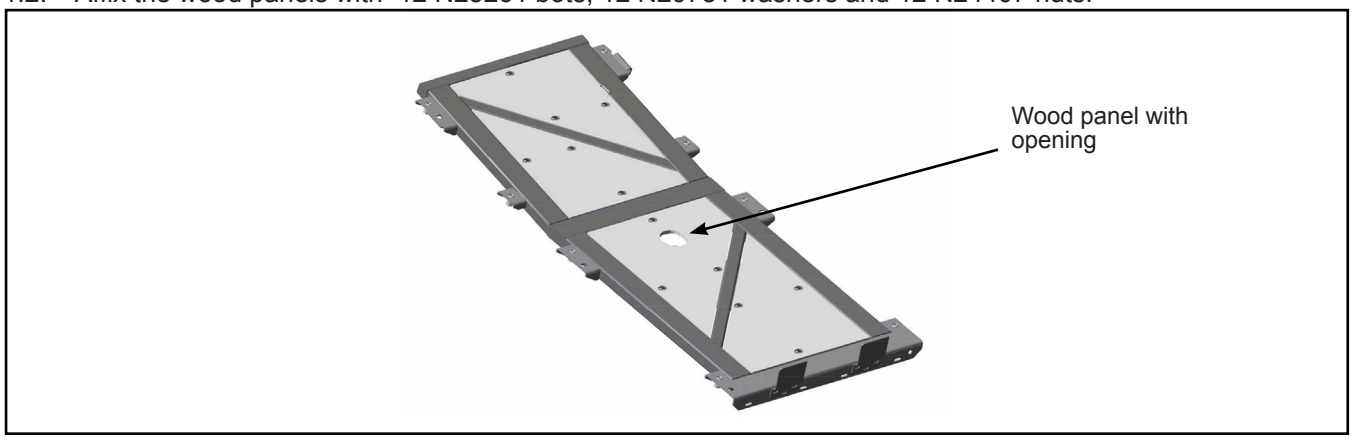

Figure 1 - Cradle with Wood Panels

1.3. Affix N71249 foam tape on top of the wood panels and cradle. See Figure 2 for the approximate position and lengths of tape.

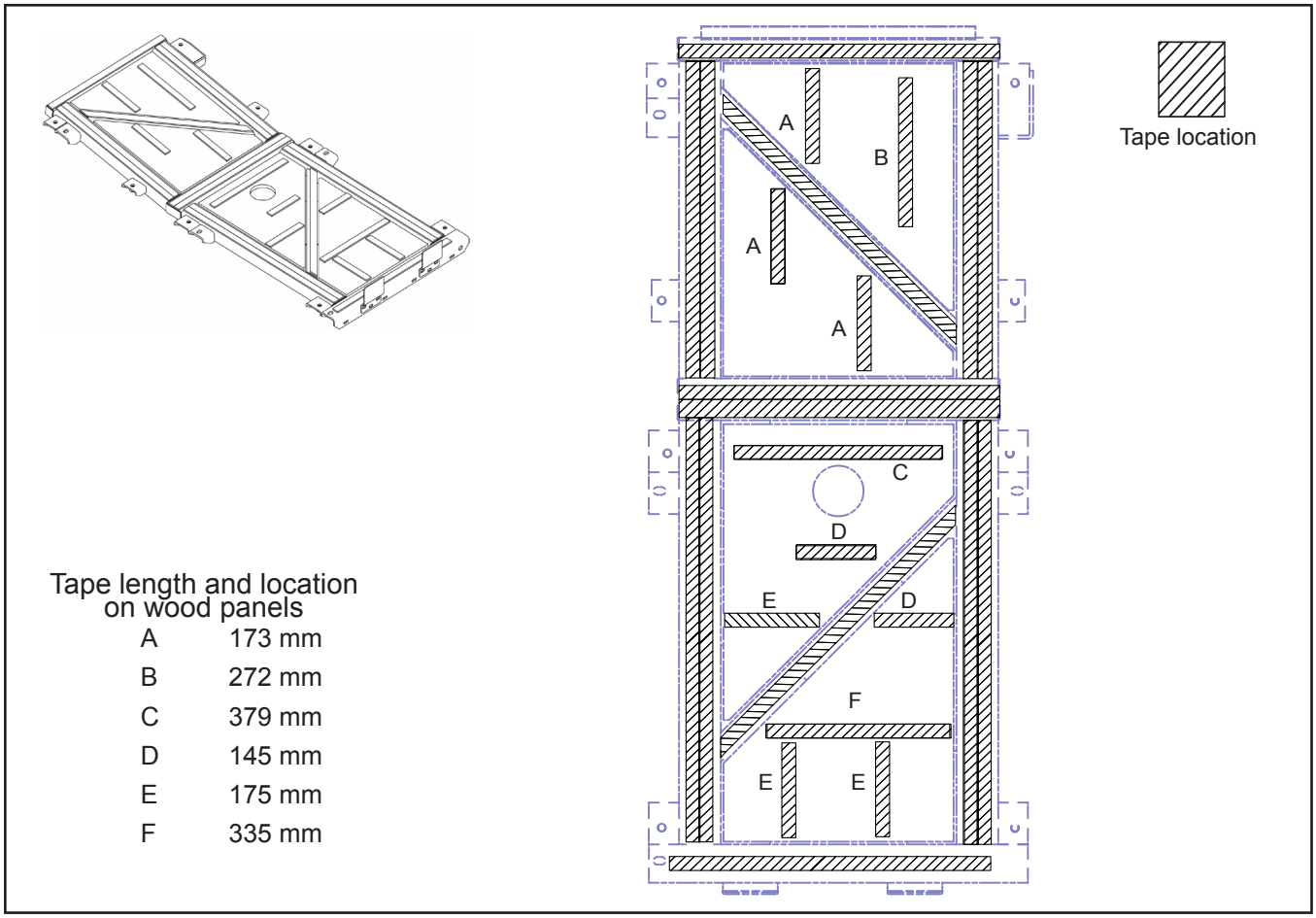

Figure 2 - Foam Tape Location

1.4. Install the fuel tank on top of the cradle.

1.5. Install the N68096 U-channels on top of the fuel tank. See Figure 3.

1.6. Insert the six anchor rods through the U-channels and the cradle supports. See Figure 3. Do not insert rods through the centre U-channel.

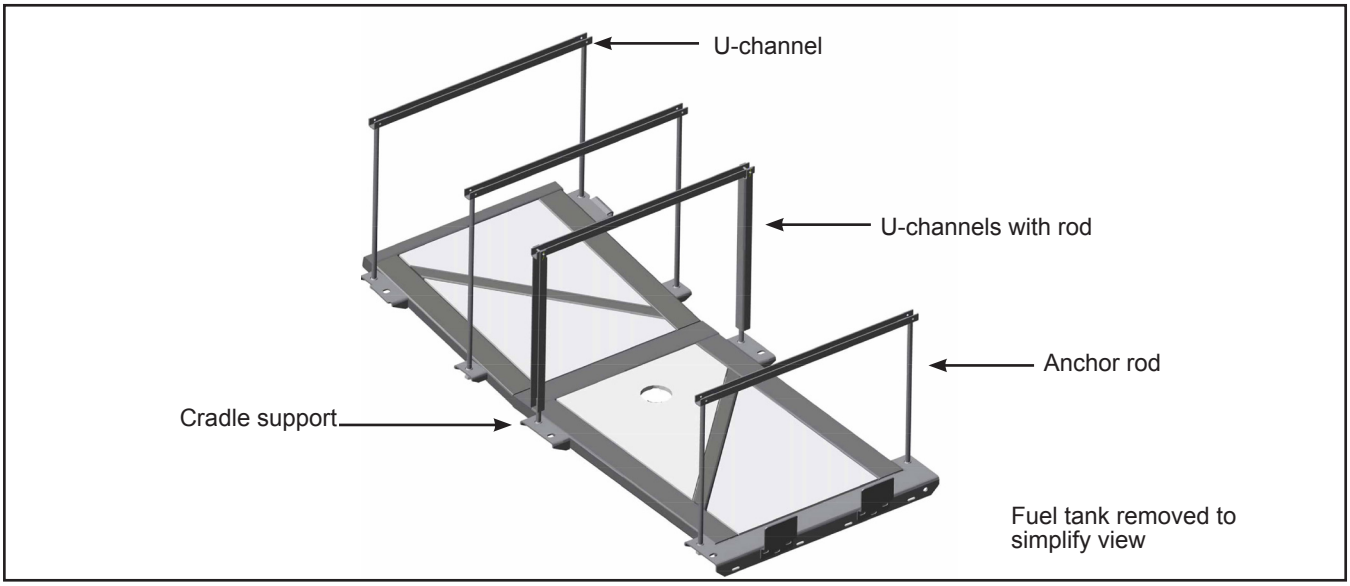

Figure 3 - Securing Fuel Tank to Cradle

1.7. Use N75857 rod pins and N75858 cotter pins to affix each N75714 U-channel with rod to the center U-channel. See Figure 4.

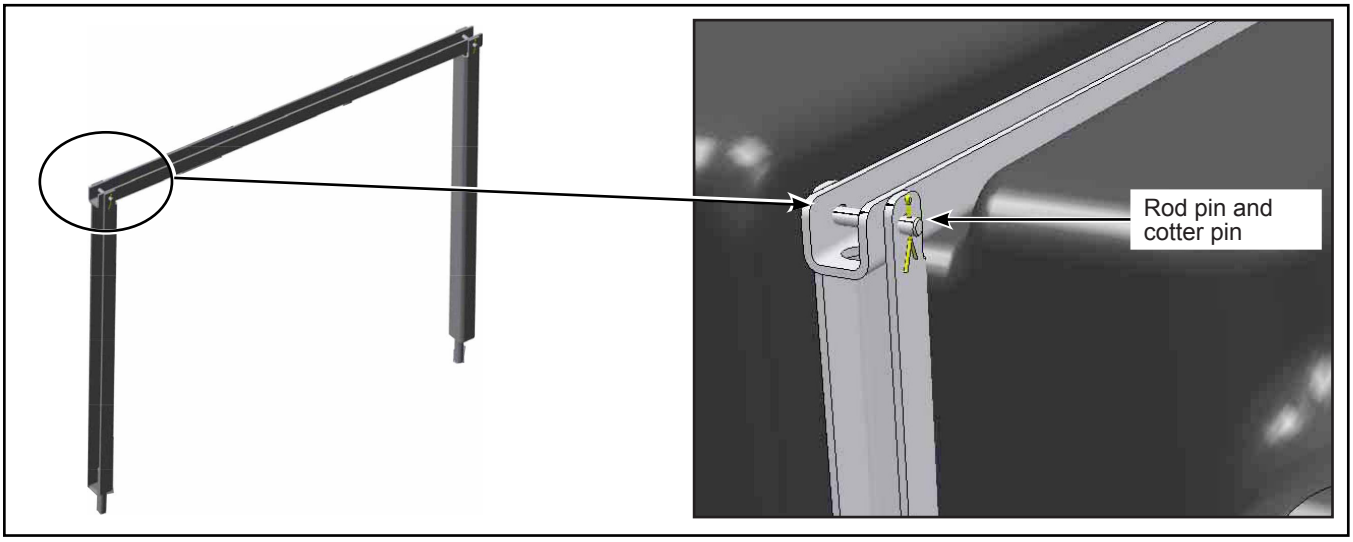

Figure 4 - Cotter Pin Assembly

1.8. Lay the U-channel assembly on top of the fuel tank and insert the rods into the cradle supports.

1.9. Affix the anchor rods and the ½ rods with N26738 flat washers and N75697 lock nuts. Tighten to the torque specified in Figure 5.

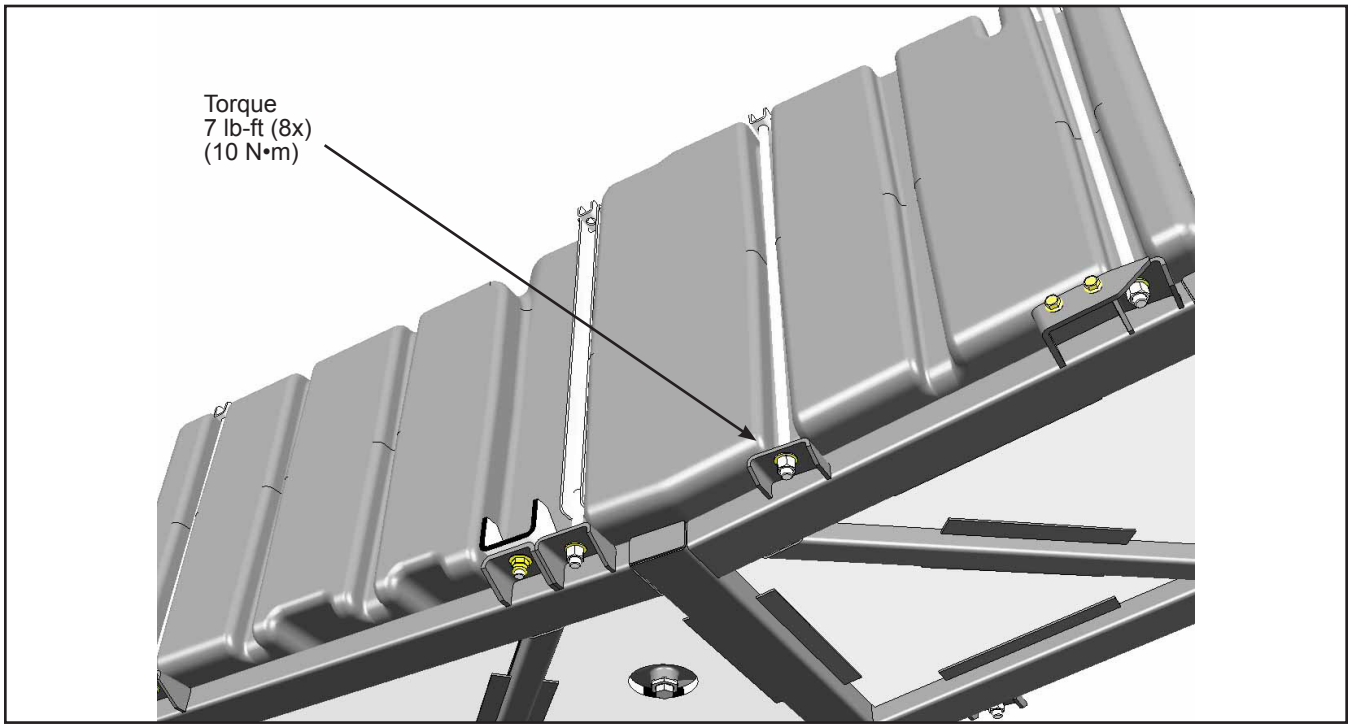

Figure 5 - Assembly and Torque

NOTE

If required, tighten the nuts one additional quarter turn to apply slightly more pressure, without deforming the plastic fuel tank.

1.10. Remove the two rear lower curbside body panels.

1.11. Remove the dustpan under the diesel exhaust fluid (DEF) reservoir.

1.12. Remove the existing fuel tank from the vehicle according to section 11: **FUEL TANK** in the Nova Bus maintenance manual. Dispose of the holding cradle hardware to the structure.

1.13. Remove and dispose of the flexible hose that connects the fuel tank to the fuel filter. See Figure 6.

1.14. Remove and dispose of the flexible hose that connects the fuel tank to the engine. See Figure 6.

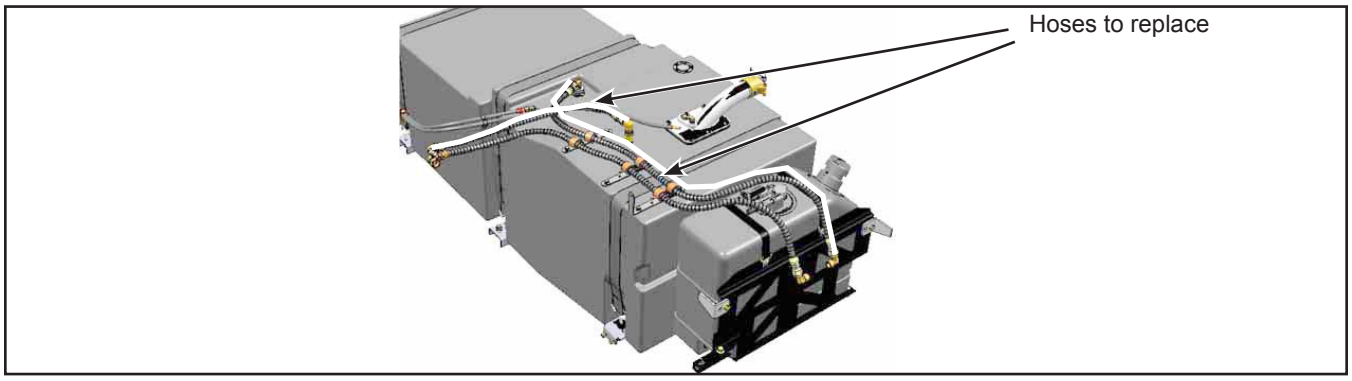

Figure 6 - Hoses to Replace

1.15. Install the new fuel hose N95703-39 onto the new fuel tank. Apply white thread sealer, Loctite 565, or equivalent. to the connectors. See Figure 7.

1.16. Install the new fuel hose N95709-39 onto the new fuel tank. Apply white thread sealer, Loctite 565, or equivalent. to the connectors. See Figure 7.

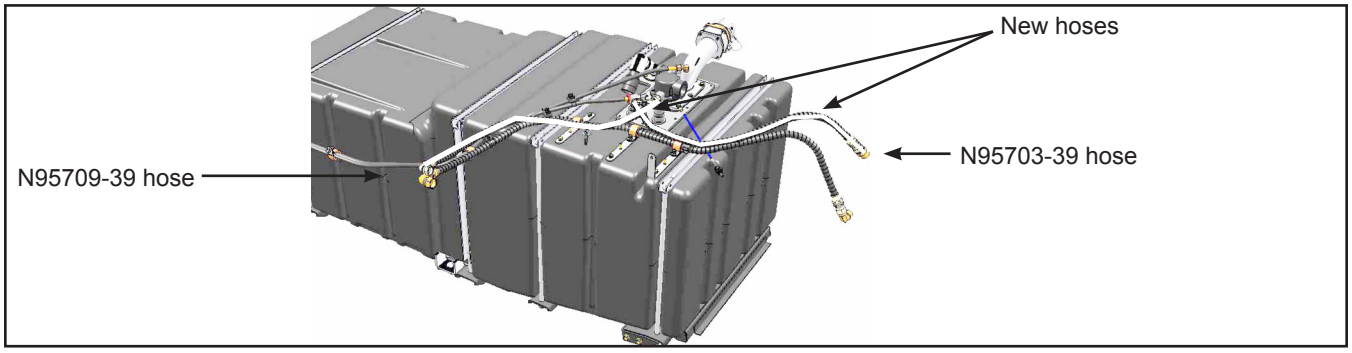

Figure 7 - New Hoses

1.17. Transfer the remaining hoses and hoses supports from the existing fuel tank to the new plastic tank. See Figure 8.

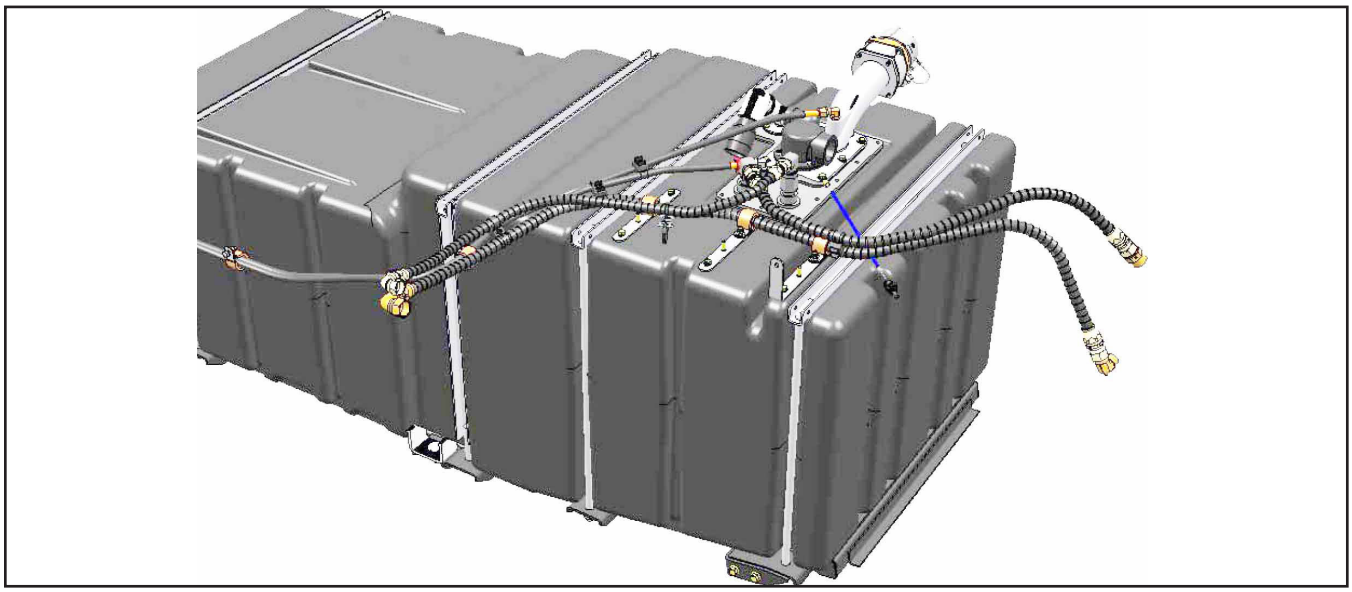

Figure 8 - Hose Assemblies

1.18. Transfer the mud flap onto the new cradle. See Figure 9.

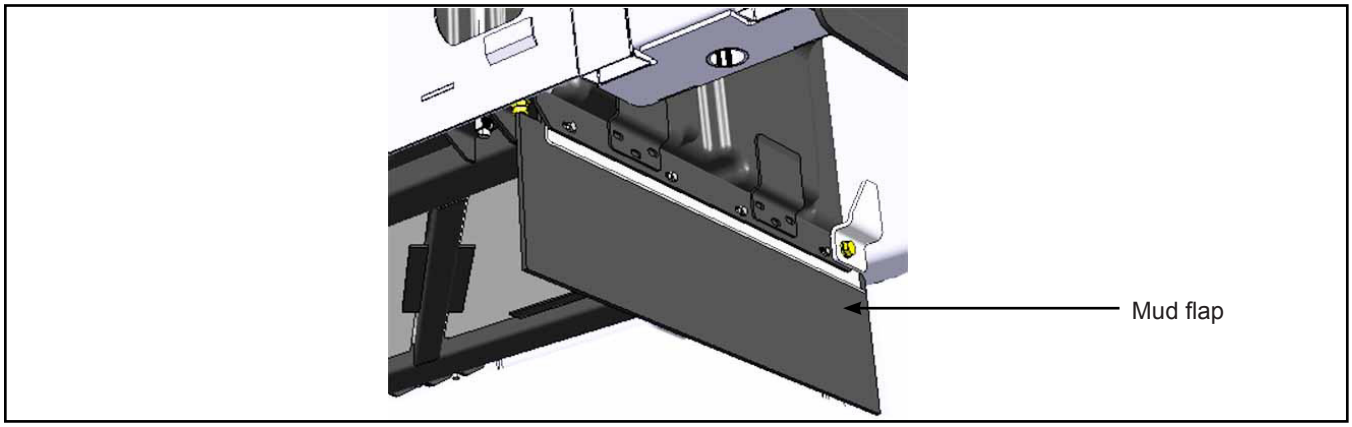

Figure 9 - Mud Flap Installation

AUXILIARY HEATER HOSE ASSEMBLY

Use number N8900601 kit for this assembly.

CONTENT OF KIT # N8900601			
QTY	**PART Nº**	**REV.**	**DESCRIPTION**
1	N37852		Rivnut M6
1	N31320-03		P-clamp
1	N16642		Bolt M6
1	N27714		Lock washer
4.5 ft (1.3 m)	N17208		Flexible hose
4 ft (1.2 m)	8862346		Loom
2	0711918		Connector
1	2394308		L Support
1	N40492		Bolt M6x20
1	N44887		Nut M6

1.19. Install one 0711918 connector onto each auxiliary heater hose.

1.20. Install a section of N17208 flexible hose onto each 0711918 connector. Cut the hose at the appropriate length.

1.21. Install 8862346 protective loom onto the two flexible hoses, where P-clamps will be installed further in this procedure. See Figure 11.

1.22. Drill a 0.350 in. (9 mm) diameter hole at the location specified in Figure 10. This operation is performed through the transmission access panel located at the rear interior of the vehicle.

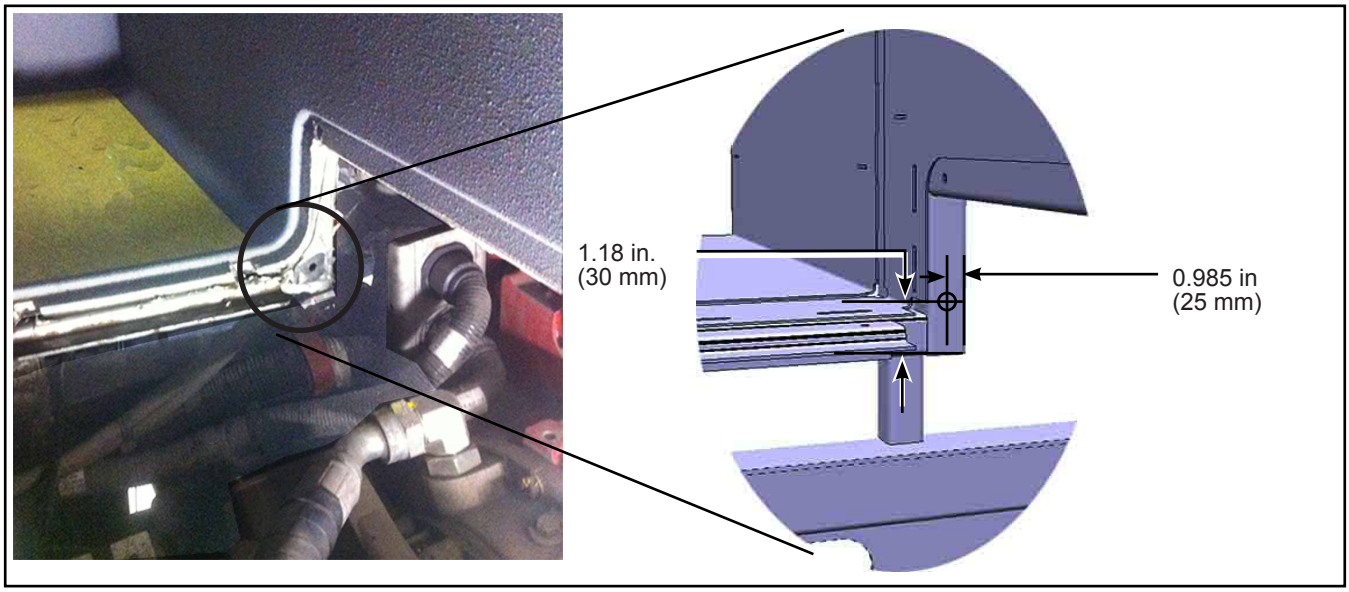

Figure 10 - Drilling for the Installation of P-clamp

1.23. Install the N37852 rivnut into the drilled hole.

1.24. Affix the L support 2394308 with bolt N16642. See Figure 11.

1.25. Affix the auxiliary heater hoses with a N31320-03 P-clamp, N40492 bolt and N44887 nut. See Figure 11.

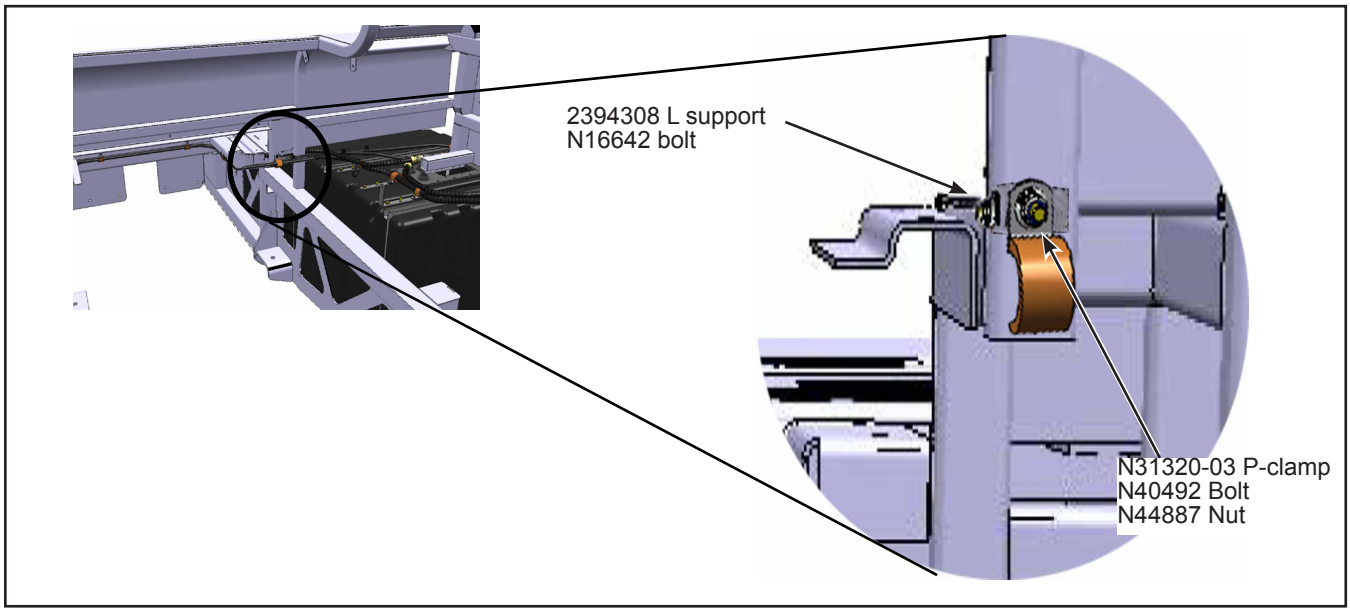

Figure 11 - Affixing the Auxiliary Heater Hose with P-clamp N31320-03

1.26. Install the N68192 cradle support with two N43774 bolts. See Figure 12.

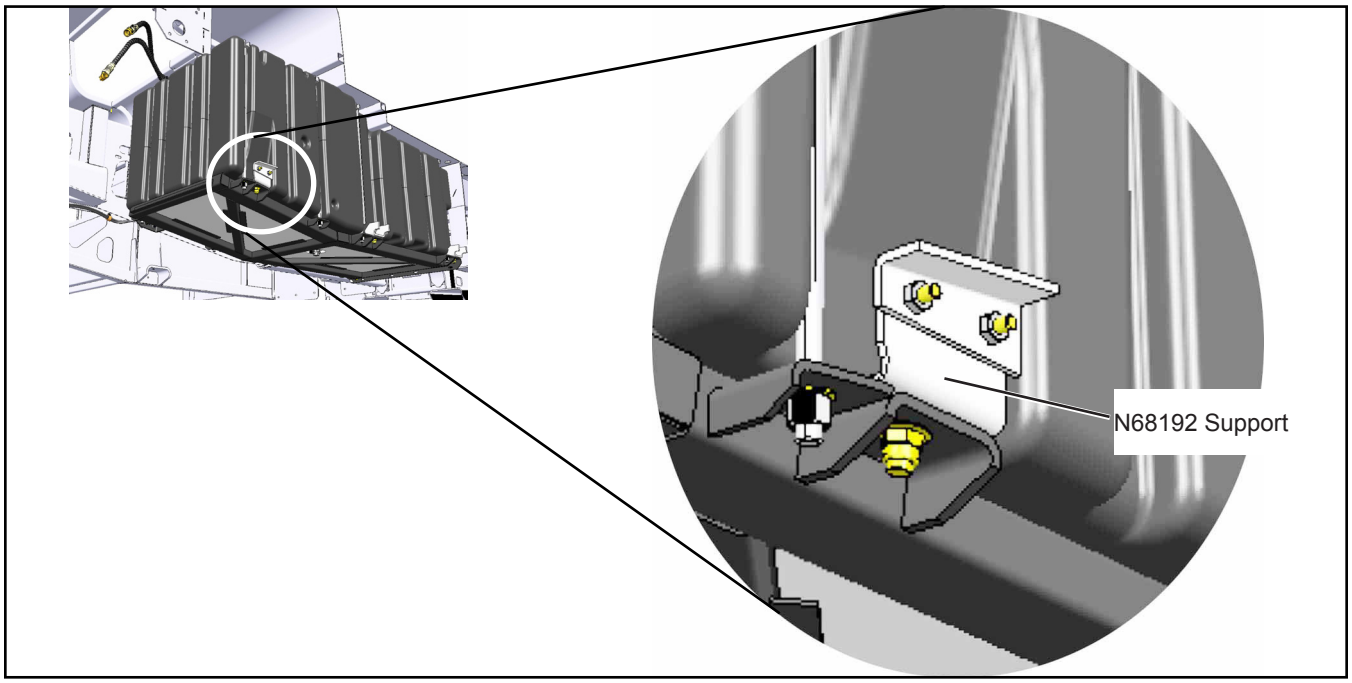

Figure 12 - N68192 Cradle Support Installation

FLOOR CONVECTOR DRAIN HOSE MODIFICATION

Use the number N8900602 kit for this assembly.

CONTENT OF KIT # N8900602			
QTY	**PART Nº**	**REV**	**DESCRIPTION**
1	N29353		Rivnut M6
1	N33325		Rivnut M6
2	N31321-02		P-clamp
2	N12705		Bolt M6
2	N27714		Lock washer

1.27. If a floor convector drain hose is installed, modify the routing:

1.27.1. Drill two 0.350 in. (9 mm) diameter holes at the position indicated in Figure 13.

1.27.2. Install the N33325 and N29353 rivnuts. See Figure 13.

1.27.3. Affix the draining hose with N31321-02 P-clamps, N12705 bolts and N27714 lock washers. See Figure 13.

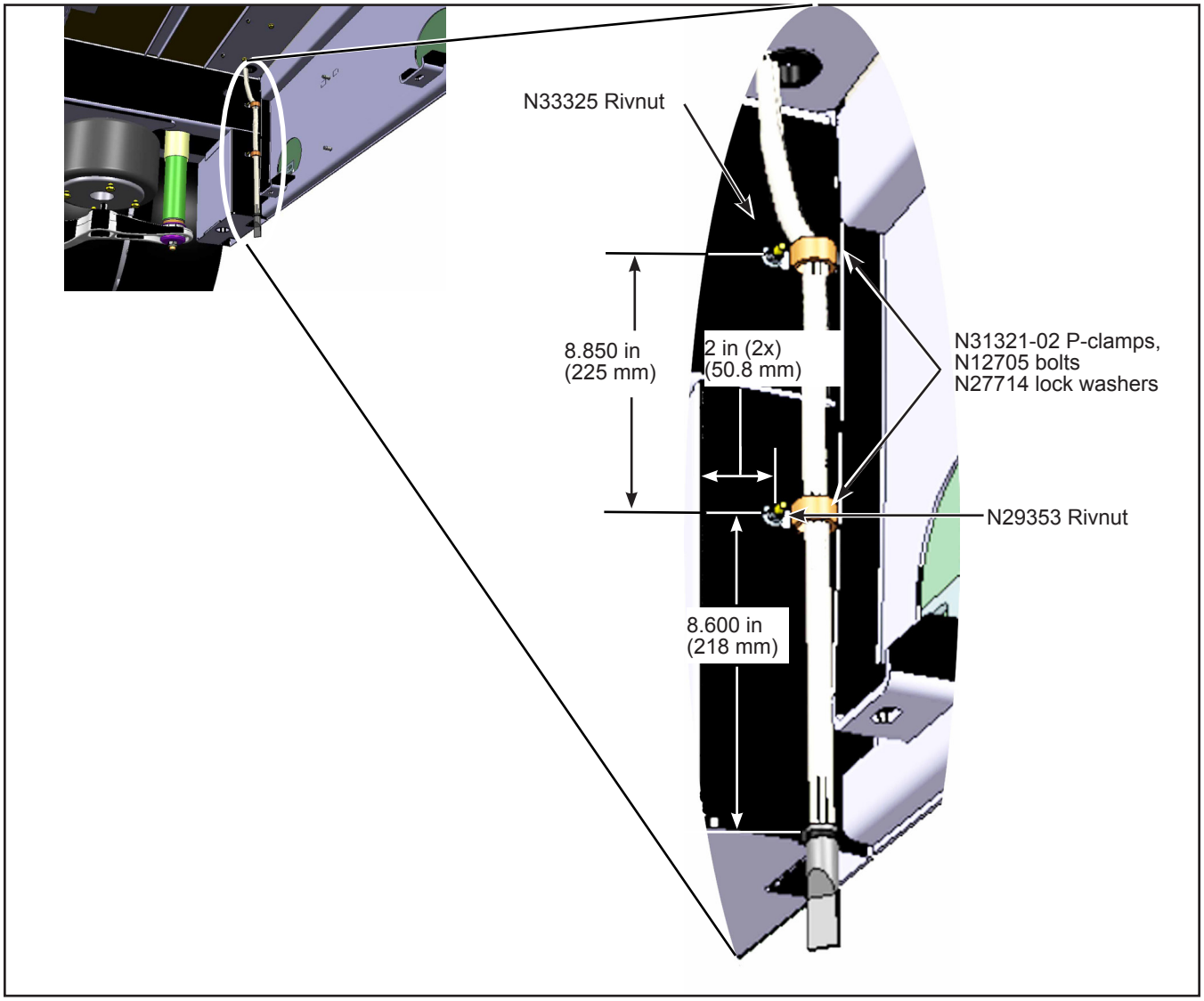

Figure 13 - Floor Convector Drain Hose Routing

FUEL FILLER NECK INSTALLATION

Use number N8900603 kit for this assembly.

CONTENT OF KIT # N8900603			
QTY	**PART Nº**	**REV**	**DESCRIPTION**
6	N17882		Bolt
6	N16646		Washer
6	N17904		Lock washer

1.28. Transfert and install the filler neck with N17882 bolts, N16646 flat washer and N17904 lock washer. See Figure 14 for the installation and torque sequence.

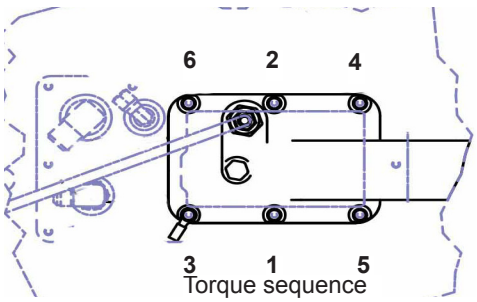

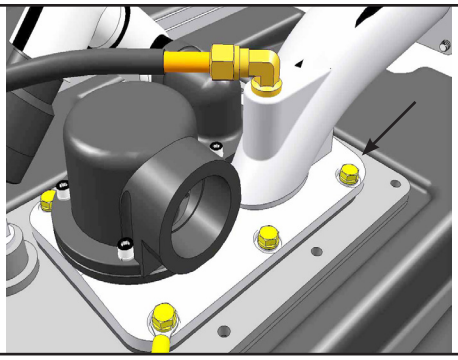

N17882 bolt
N16646 washer
N17904 lock washer
Torque
7 lb-ft (9.5 N•m)

Figure 14 - Filler Neck Installation with New N17882 Bolts

FINAL FUEL TANK INSTALLATION

1.29. Install the fuel tank following the procedure in section 11: **FUEL TANK** of the Nova Bus Maintenance manual.

1.30. Install the N71632 bolt with the N55936 nut. Tighten to the torques specified in Figure 15.

NOTE

The bolt can be installed before the fuel tank assembly installation.

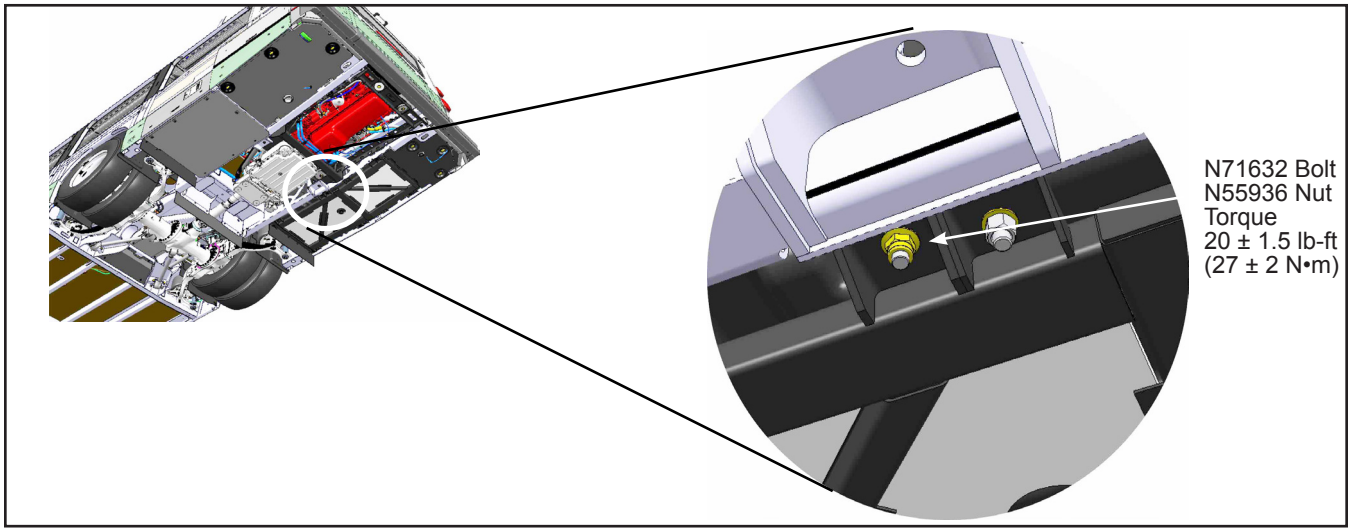

Figure 15 - Carriage Bolt Installation

1.31. Install the new hardware to hold the cradle to the structure. Tighten the fuel tank assembly to the torques specified in Figure 16.

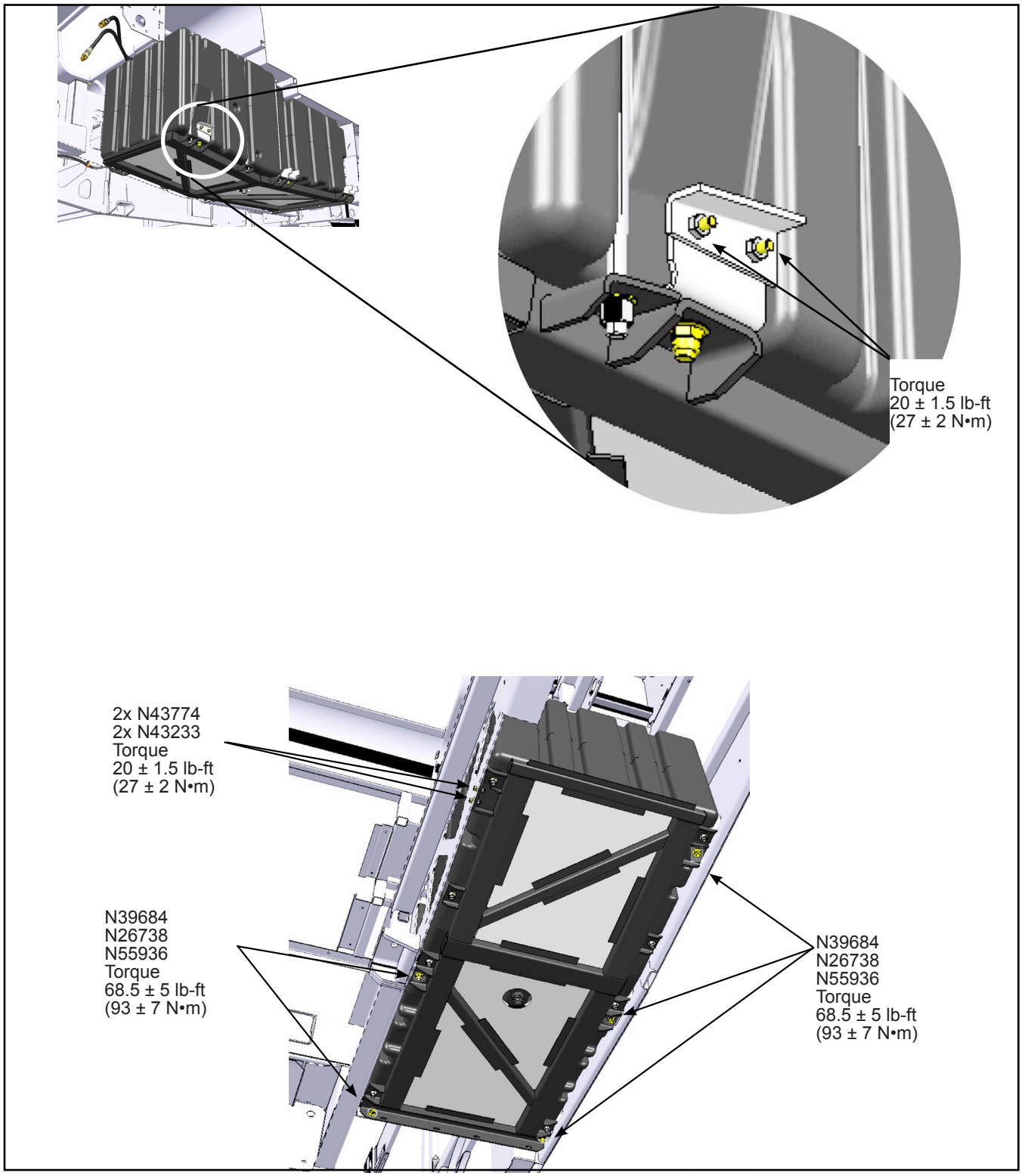

Figure 16 - Torque Values for Fuel Tank Assembly

1.32. Install and tighten the fuel hoses to the torques specified in Figure 17.

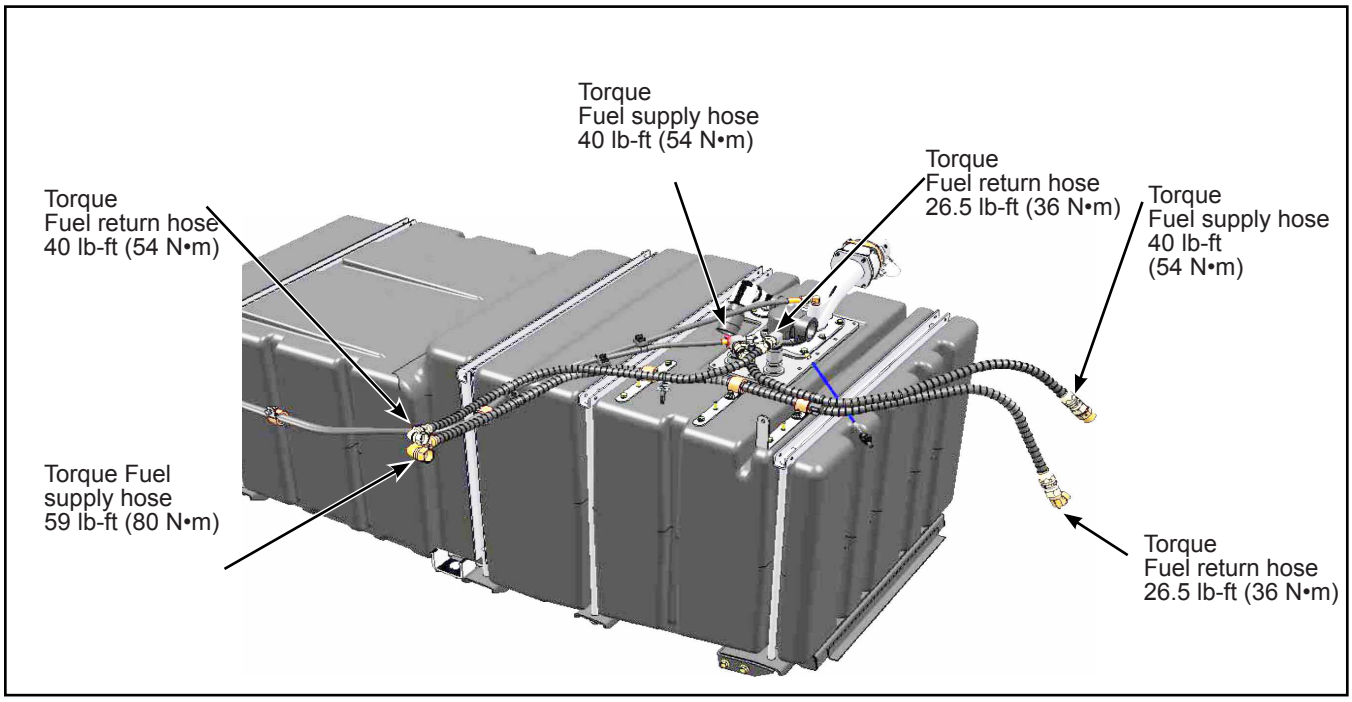

Figure 17 - Fuel Hose Torques

1.33. Install the N72800 dustpan.

1.34. Install the two rear lower curbside body panels. ❖