Countries:	CANADA, UNITED STATES, PUERTO RICO	**Document ID:**	IK0700071
Availability:	ISIS, Bus ISIS, FleetISIS	**Revision:**	3
Major System:	EXHAUST	**Created:**	2/20/2014
Current Language:	English	**Last Modified:**	2/20/2014
Other Languages:	NONE	**Author:**	Brian Reeves
Viewed:	154		

Less Info

Hide Details

Coding Information

Copy Link	Copy Relative Link	Bookmark	Add to Favorites	Print	Provide Feedback	Helpful	Not Helpful
		View My Bookmarks				2	0

Title: Ordering SCR Aftertreatment Parts for Vehicles Powered by Cummins Engines

Applies To: 2013 MY Forward: ProStar, LoneStar, 9900i, DuraStar, CE Bus, and WorkStar vehicles powered by Cummins ISX15 CM2350 or ISB6.7 CM2350 engines operating in the North America market.

DESCRIPTION

Ordering SCR Aftertreatment Parts for Vehicles Powered by Cummins Engines:

- **Warranty Information**
- **Parts Ordering information**

WARRANTY INFORMATION

- **If the vehicle is powered by a Cummins Engine, warranty for a root cause failure of a Cummins component is filed through Cummins RAPIDSERVE system. Warranty for a root cause of failure for a Navistar component is filed through the Navistar warranty system. See IK0700050 to identify the Navistar and Cummins Responsible Parts. Pre-authorization from Cummins RAPIDSERVE may be required to purchase Cummins aftertreatment parts for a Cummins powered vehicle.**
- **If the vehicle is powered by a Navistar engine, refer to iKNow article IK0700065.**
- **If the vehicle is Cummins powered, Cummins engine and after treatment parts will be filed via Cummins warranty. Insure you follow all procedures outlined by Cummins. Contact your local Cummins distributor for any questions.**

This article is intended to outline the process for finding and ordering parts for the Selective Catalyst Reduction (SCR) aftertreatment system on SCR equipped vehiclespowered by Cummins engines. The steps are outlined below.

Note: This is the process to locate aftertreatment part numbers. For Cummins ENGINE part #'s, reference Cummins QuickServe Online (QSOL) or contact your local Cummins Distributor.

To find the SCR aftertreatment part numbers:
1. Go to the Parts Catalog home page.
2. Add your Vehicle Identification Number (VIN) to the search box and click Chassis Number.

3. On the new screen that opens expand the group 07 - Exhaust Subsection and select the appropriate sub group.

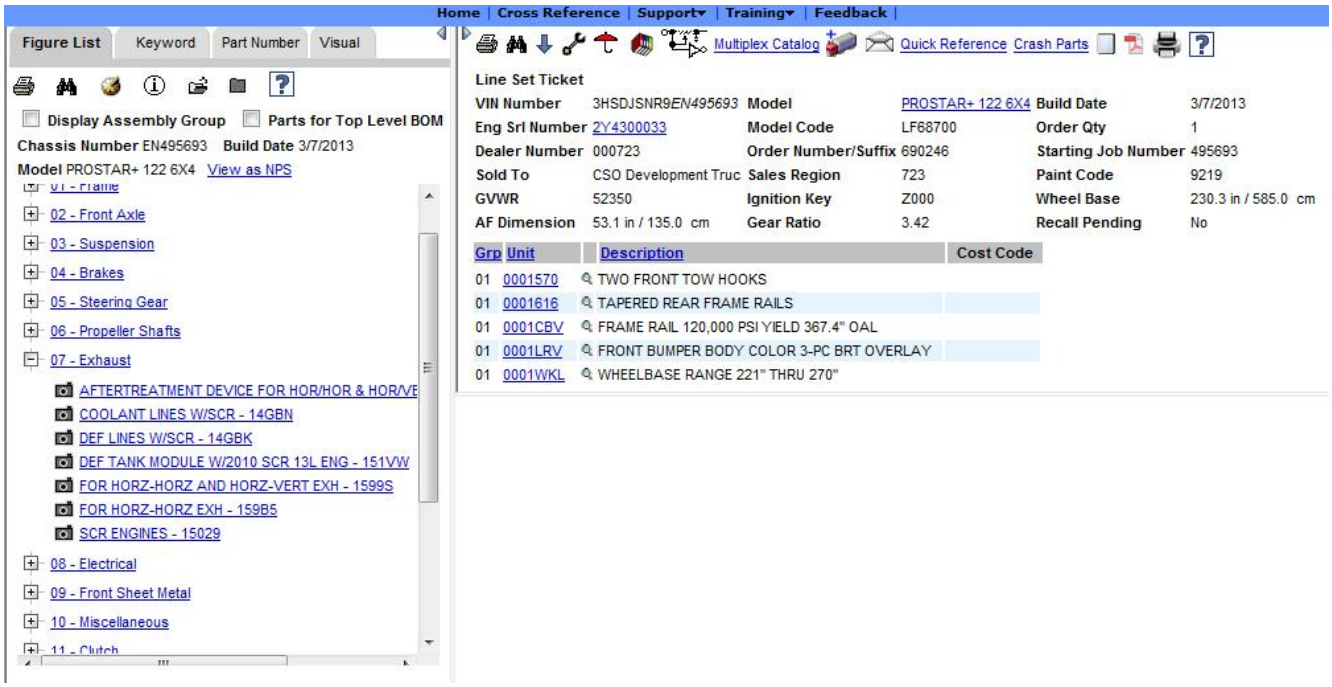

4. A new window will open with the part numbers and description of that sub group.

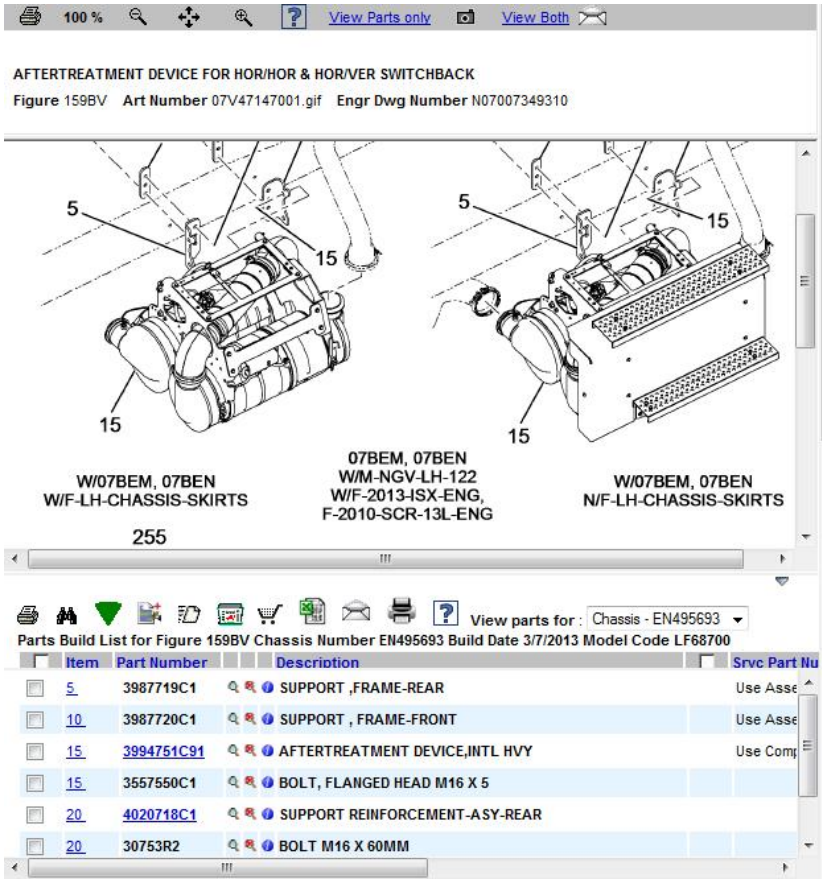

5. Choose the part your are looking for. Scroll to the right to reference the SOS code.
a. If SOS code is 026 the part is stocked by Navistar. Continue ordering the part through the normal process.

6. Select the appropriate component and check the SOS code for parts stocking status.
a. A 117 SOS code is Buy Direct From Supplier.
b. Any SCR component coded 117 must be purchased directly from Cummins.

mber EN495693 Build Date 3/7/2013

	Srvc Part Number	Qty	Kit	UOM	SOS	D
MENT DEVICE,INTL HVY	Use Component Parts	1		PC	105	
LER SUPT ,		2		PC	026	
LER SUPT ,		2		PC	026	
PIPE,SWITCHBACK-DPF	Buy Direct From Supplier	1		PC	117	
PIPE,SWITCHBACK-SCR	Buy Direct From Supplier	1		PC	117	
OSITION PIPE,SWITCHBACK-DECOMP	Use Component Parts	1		PC	105	

7. You can get the Cummins part # cross reference information by clicking on the magnifying glass with the RED X icon.
a. This is the part # you will need to provide to your Cummins Distributor.

All

Cross Reference List for Part Number 3855685C1

Srvc Part Number	Srvc Stat Code	Part Number	Supplier	Description	Qty	Stat Code	MktMeth	Cond Code	Type	Disp
		2880215	CUMMINS	GASKET,EXH PIPE FLANGE, 5" SPH	1	A			EXACT	
BC4O 5E281AA		BC4O 5E281AA	FORDPRD	GSKT-EXH PIP	1	A			EXACT	
BC4Z 5E241A		BC4Z 5E241A	FORDSVC	GASKET	1	A			EXACT	
BC4O 5E281AA		BC4O 5E281AA	FORDPRD	GSKT-EXH PIP	1	A			EXACT	
		2880215	CUMMINS	GASKET,EXH PIPE FLANGE, 5" SPH	1	A			EXACT	
		4420587-STOCKED	NC2CAT	GASKET EXH PIPE FLANGE 5" SPH	1	A			EXACT	
		A029E744	NELSN	GASKET,EXH PIPE FLANGE,	1	A			EXACT	
BC4Z 5E241A		BC4Z 5E241A	FORDSVC	GASKET	1	A			EXACT	

Hide Details

Feedback Information

Viewed: 153
Helpful: 2
Not Helpful: 0

No Feedback Found

Copyright © 2014 Navistar, Inc.