NOVA BUS

SERVICE BULLETIN

BS3095E

REFERENCE:	Nova Bus Manuals
SECTION:	18 Articulation system
RS Nº:	7621-398
EFFECTIVE IN PROD.:	–

APPLICATION DEADLINE: 2015AL15
CLAIM REFERENCE NUMBER: WB-3095

SUBJECT:	60 ft vehicle 5000 series MCC: energy guidance system of the articulation system
JUSTIFICATION:	Hoses and harnesses can be damaged in the energy guidance system

LEVEL	DESCRIPTION	DIRECT CHARGES		TIME
		LABOUR	MATERIAL	
1	Replace and reroute the hoses passing on the energy guidance system	Nova Bus	Nova Bus	21
2	–	–	–	–

MATERIAL

QTY	PART Nº	REV.	DESCRIPTION	REPLACES PART N°
LEVEL 1				
2	N31991		BOLT M6 X 50 SS GR.A2 DIN 931	
1	N72375		BRACKET MOUNTING EGS	
2	N71853		BRACKET MOUNTING EGS	
1	N71854		BRACKET MOUNTING EGS	
6	N44691		SCREW M6X30 HEX SSA4 C70 D931	
8	N37495		TWO WAY SADDLE MOUNT	
5	8860534		NYLON TUBING 1/2 BLACK (4 X 330mm)	
16	N76954		CABLE TIE HUBNER (PENDUIT)	
125	G5007996		TIE RAP BLACK	
2	N74177		HOSE 1.25" X 200" with loom	
1	N95808-01		Hydraulic extension 8.75 In	
1	N95808-03		HOSE HYD. PWR STEERING	
2	N70200-04		O-RING FOR ORS FITTING #08	
4	N70200-01		O-RING FOR ORS FITTING #20	
4	N70200-02		O-RING FOR ORS FITTING -24	
2	N70200-03		O-RING FOR ORS FITTING -10	
2	N31320-23		P-CLAMP 1.125" ID	
2	N31320-10		P-CLAMP 1.375" ID	
2	N31320-18		P-CLAMP 1 1/4" ID	
2	N31320-20		P-CLAMP 0.625" ID	
10	N43233		LOCKNUT NYLON M8 SS	

APPROVED BY:

Daniel Theriault

Digitally signed by Daniel Theriault
DN: cn=Daniel Theriault, o=Nova Bus, ou=Publication, email=daniel.theriault@volvo.com, c=CA
Date: 2014.02.21 13:46:17 -05'00'

2	N58711		O-RING FOR ORS FITTING	
20	N75181		EDGE TRIM ES28-210-P80	
4	N70200-06		O-RING FOR ORS FITTING #20	
15	N34049		CORK TAPE	
2	N60127		SUPPORT ASM PIPE HTG	
20	N44890		NUT LOCKNYL M6 FL SSA2 C70	
4	N43104		INSULATION TUBE 1/2" I.D. (6 FEET)	
4	N20379		INSULATION TUBE 1 3/8" I.D. (6 FEET)	
4	N29982		INSULATION TUBE 1 1/8" I.D. (6 FEET)	
1	N76611		TUBE ASSY 1 3/8" CARR FRT BHD	
1	N76610		TUBE ASSY 1 1/8" CARR FRT BHD	
1	N76612		TUBE ASSY 5/8" CARR FRONT BHD	
1	N76553		TUBE ASSY 1 3/8" CARR RR BHD	
1	N76554		TUBE ASSY 1 1/8" CARR RR BHD	
1	N76551		TUBE ASSY 5/8" CARR REAR BHD	
1	N76435		BRACKET ASSY A/C PPG CARR FRT	
1	N76436		BRACKET ASSY A/C PPG CARR FRT	
2	N76437		BRACKET ASSY INTERFACE EGS	
2	N38350		ANCHOR HEAVY DUTY MOUNTS	
4	N37749		Dual clamp Tie Tyton	
1	N95812-13		HOSE ASSY FC800 ORS-24 SUC	
1	N95812-14		HOSE ASSY FC800 ORS-20 DISCH	
1	N95795-04		HOSE ASSY GH134 ORS-10 LIQUID	
40	N14529		CABLE TIE	
2	N77181		HOSE PROTECTOR 6 INCHES LGTH	
4	N44884-01		SCREW M6X20 FL SSA2 C70 D6921	
LEVEL 2				
–	–	–	–	–

Materials will be available within 50 days. To order, please contact Prevost Parts by phone at 1-800-771-6682, by fax at 1-888-668-2555 or by email at prevostparts.commandes@volvo.com. Specify document number, quantity of parts required and shipping address.

DISPOSAL OF PARTS

REMOVED PARTS ARE:	DISCARDED *	RETAINED	* Dispose of the unused parts and the defective parts in accordance with local environmental standards in effect.
	Yes	–	

REVISION HISTORY

REV.	DATE	CHANGE DESCRIPTION	WRITTEN BY
NR	2014FE15	Initial release	Wilder Galiano

CLIENT	ORDER	ROAD NUMBER		VIN (2NVY/4RKY...)		QTY
		FROM	TO	FROM	TO	
New York City Transit - New York	L643	5895	5895	S92U1B4000143	S92U1B4000143	1
New York City Transit - New York	L681	5896	5283	S92U2C4500023	S92U9C4500195	122
New York City Transit - New York	L692	5284	5363	S92U3C4500158	S92U3D4500274	80

WARNING

Follow your internal safety procedures.

(STEP X) refers to the steps of the quality assurance check sheets that can be found in the annex of this document.

PROCEDURE

Make sure the bus is completely straight before starting this procedure.(Step 1)

Turn off the main switch of the vehicle so that there is no current in the electrical wires before performing the following items. (Step 2)

1.1. Perform the A/C compressor oil procedure as per the manufacturer's specification.
1.2. Drain and recover the air conditioning coolant (Freon). Follow the manufacturer's specification. (Step 3)
1.3. Remove the articulation ceiling cover.(Step 4)
1.4. Remove the rear and front bulkhead.(Step 5)
1.5. Remove and tag baselights. Remove and retain the insulation and other protective material. (step 6).
1.6. Remove stanchions on the vehicle.(Step 7)
1.7. Unbolt the stabilizer arms from the bulkheads and attach them to the center guiding profile.(Step 8)

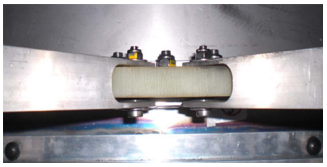

Figure 1 - Stabilizer Fixing Points

1.8. Cut all tie wraps that hold the hoses.
1.9. Retain black spacing tubes.

PRELIMINARY INSPECTION (STEP 9)

An inspection must be completed prior to performing the retrofit in order to determine what parts need to be changed. Inspect the following components for damage or wear and replace if needed:

-Hydraulic lines.
-Pneumatic lines.
-Main electrical harness.
-Power cables.
-Communication harness.
-EGS blades and trays. replace plastic trays and rivets if broken. If the metal blade is crack or broken, replace the blade.

***A/C hoses, A/C copper pipes and coolant lines do not need to be inspected because they will be changed as part of this procedure.**

Refer to your Maintenance manual for repair procedures and part numbers when damage is found on pneumatic, hydraulic lines or other components.

*****Refer to your campaign service representative when damage is found on electrical wires, harness or cables.**

DRAIN

CLOSE WATER VALVES FOR HEATER LOOP (STEP 10)

Retain all fluids in appropriate clean containers to be reused.

1.10. Drain the coolant.

- 1.10.1. See section 09-302: Engine cooling and section 14: HVAC for the coolant draining procedure.
- 1.10.2. Drop down the coolant hoses.
- 1.10.3. Pinch hoses as shown with hose pinch-off pliers.
- 1.10.4. Cut the hoses and remove the pliers to drain.
- 1.10.5. Recuperate and reuse the coolant.
- 1.10.6. Remove and dispose of the coolant hoses.

1.11. Drain the hydraulic liquid. (step 11)

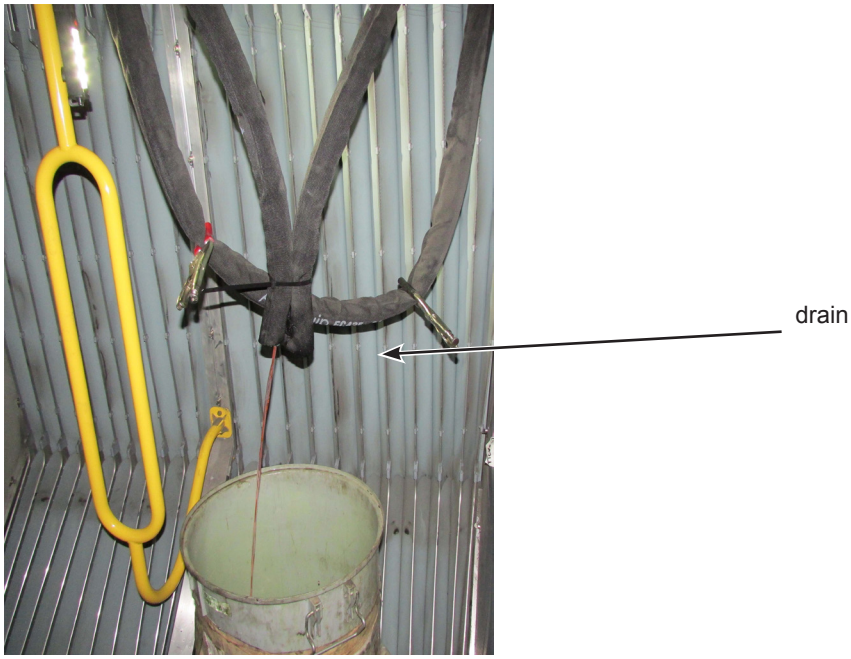

Figure 2 - Suggested Coolant Drain

1.11.1. See section 09-304: Hydraulic system for the hydraulic fluid draining procedure.

1.11.2. Underneath the hydraulic fluid reservoir, open the plug to drain five liters of the fluid shown.

1.11.3. Unplug the hydraulic hoses in the front part of the vehicle.

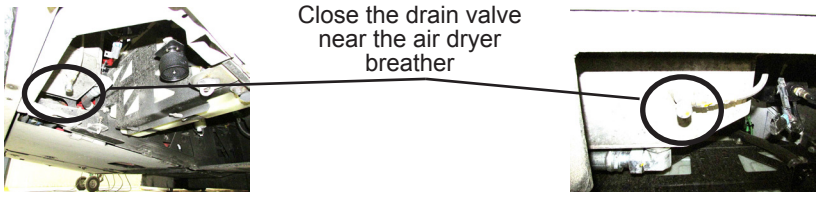

Figure 3 - Hydraulic System Drain

1.11.4. Recuperate and reuse the hydraulic fluid in a clean container as shown.

DISSASSEMBLY

1.12. Disconnect the ground cable, accessories cables and 24-V cables in the front section. Cables can be sorted in the articulation compartment. Labeling the 24 cables with labels is recommended. Street side and curb side. (step12)

1.13. The 12-V cable must be disconnected in the front section.

1.14. Remove and dispose of the air conditioning hoses. (step 13)

1.15. Remove the existing front and rear A/C copper pipes. (step 15)
1.16. Remove the plastic cylinder in the front and rear sections. (step 16)

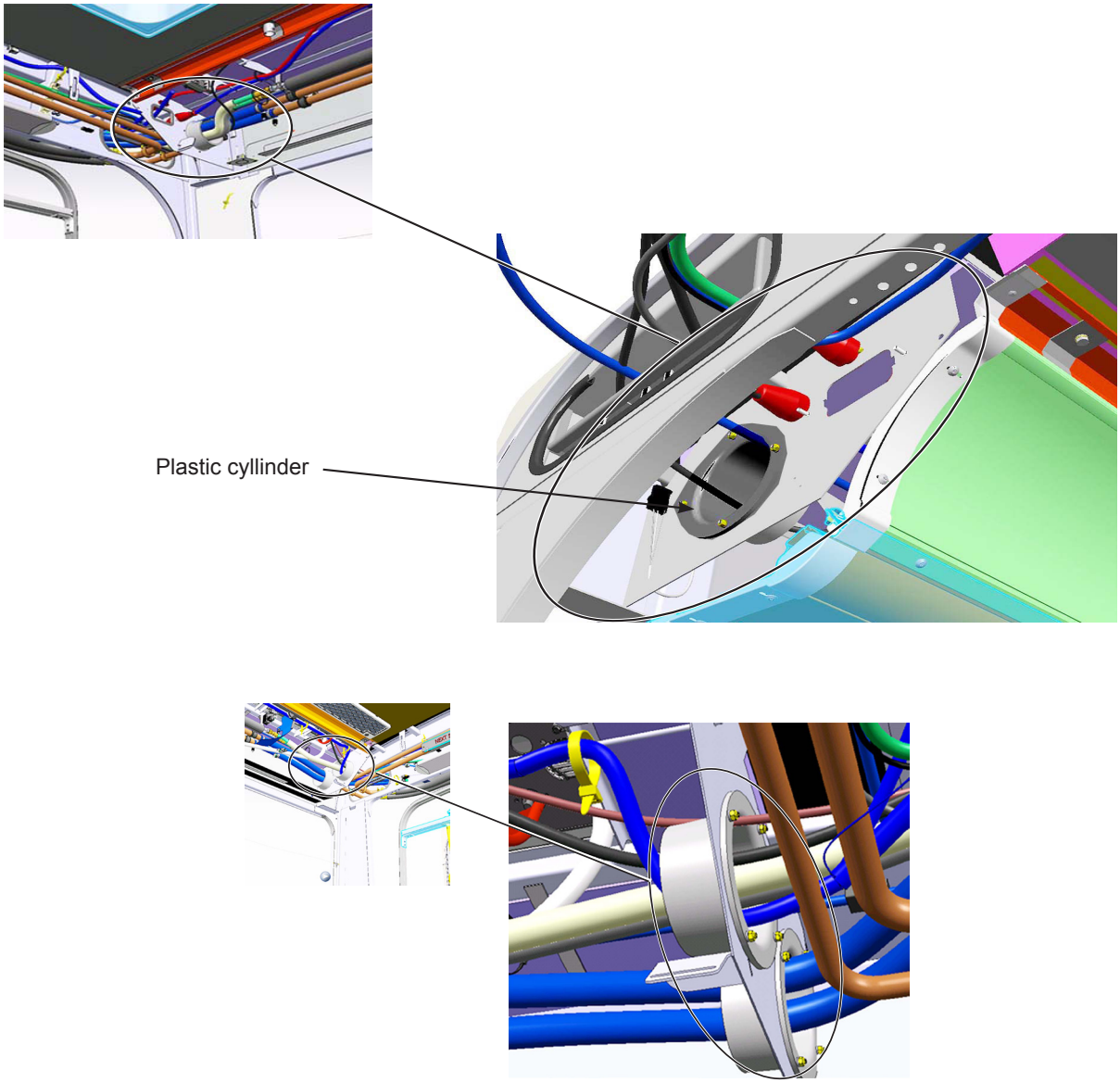

Figure 4 - Front and Rear Plastic Cylinders

1.17. Cut the existing A/C copper pipe support in the front section and rear section in the articulation area. The inner side must be cut and ground flush. On the outer side cut and leave two inches. Bend the two inch end towards the wall. (Step 17).

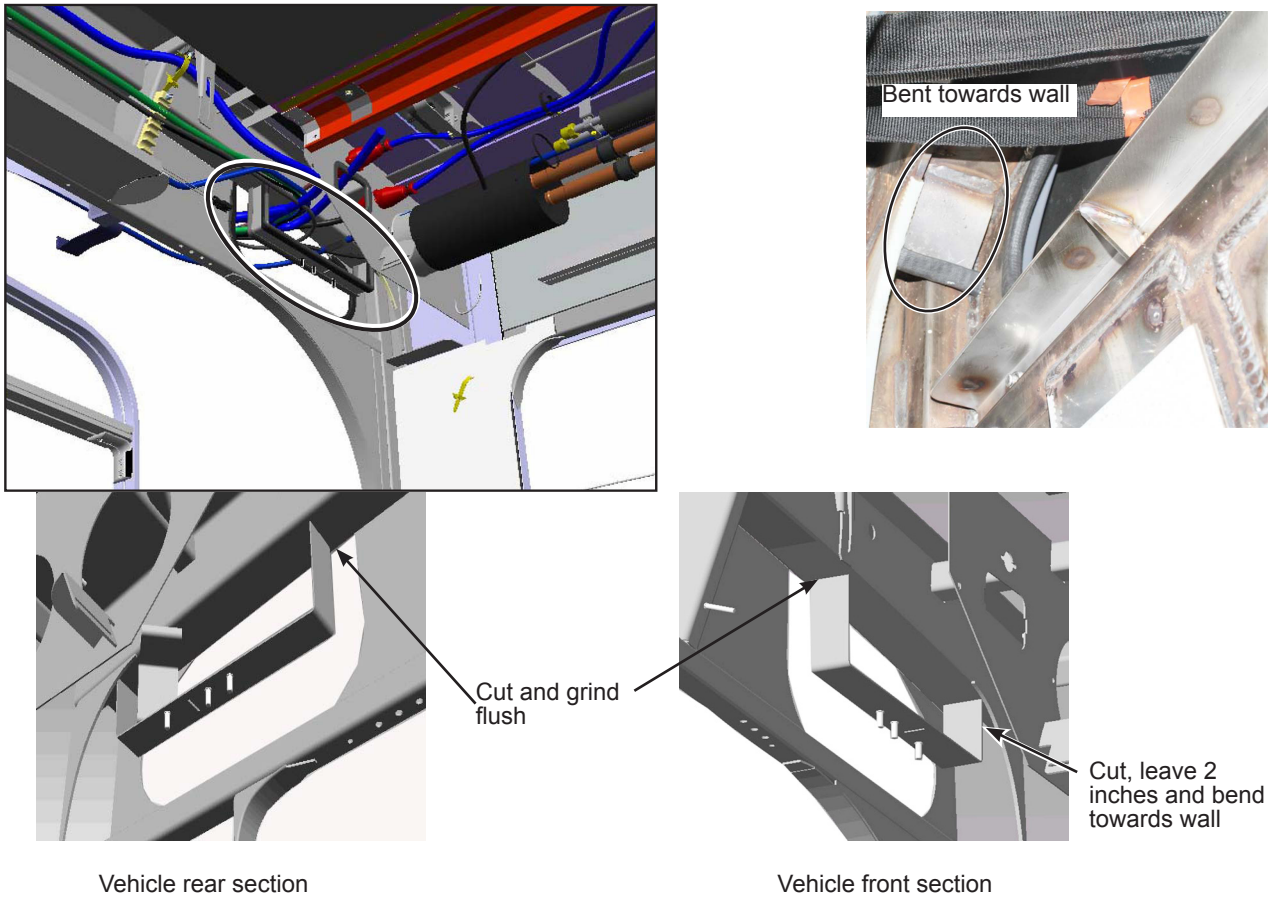

Figure 5 - Removing the A/C Copper Pipes Support

INSTALLATION

1.18. Temporarily position new bulkhead brackets using clamps. (Step 18).

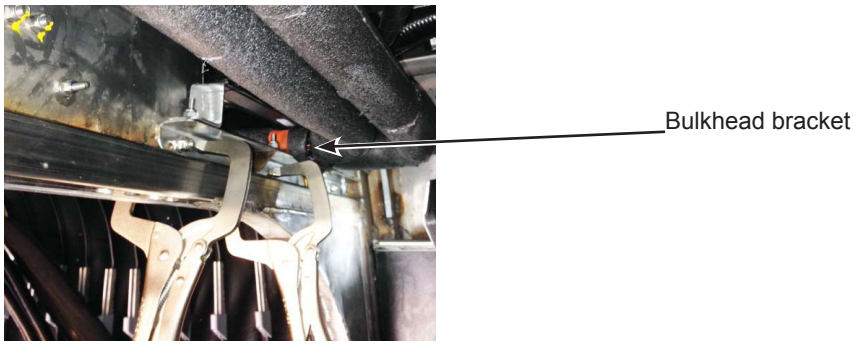

Figure 6 - Fixing the Bracket

1.19. Install N75181 edge trim in the N71853 bracket. (STEP 19)

1.20. Install the N71853 support in the front section of the vehicle.

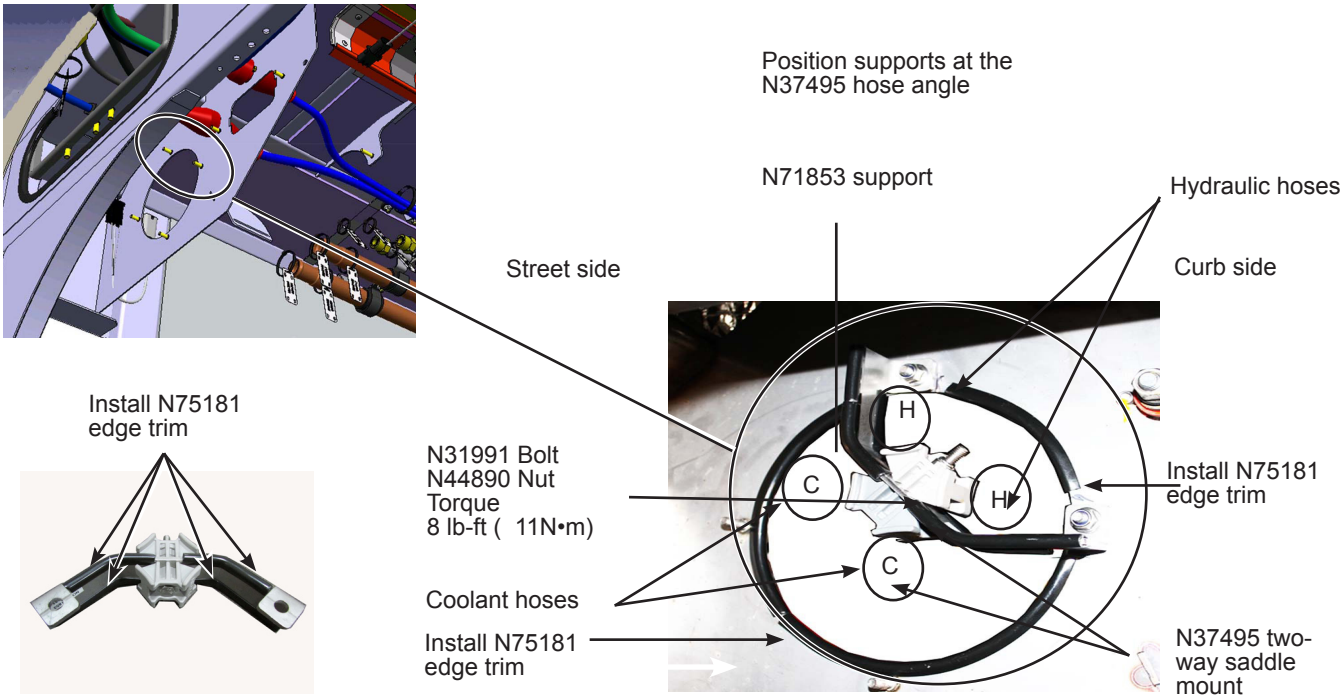

Figure 7 - Bracket Installation

1.21. Install the N72375 support in the front section of the vehicle.

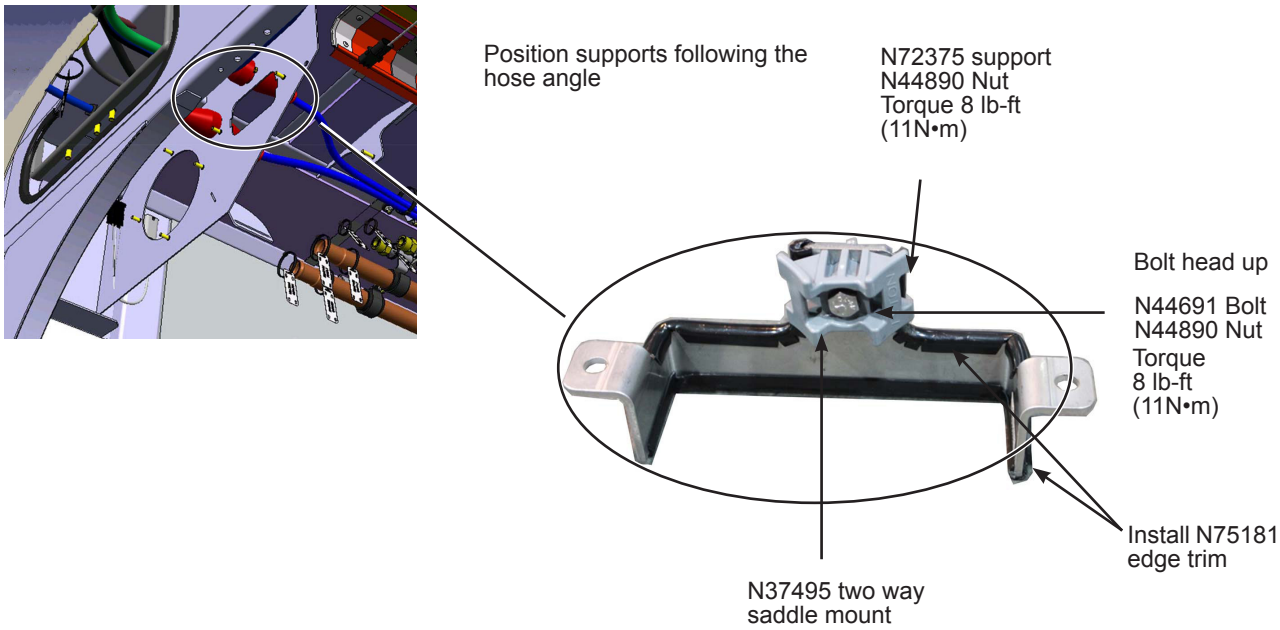

Figure 8 - Bracket Installation

1.22. Install the N71854 support in the rear section of the vehicle.

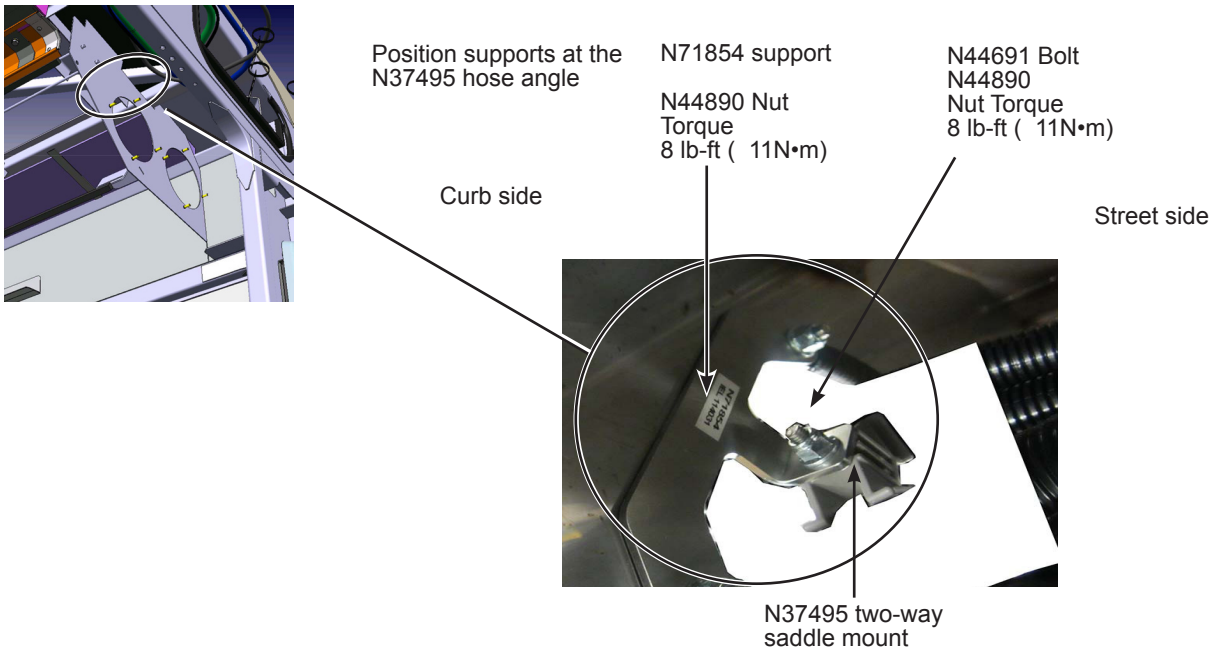

Figure 9 - Bracket Installation

1.23. Install N75181 edge trim in the N71853 bracket.

1.24. Install N71853 bracket.

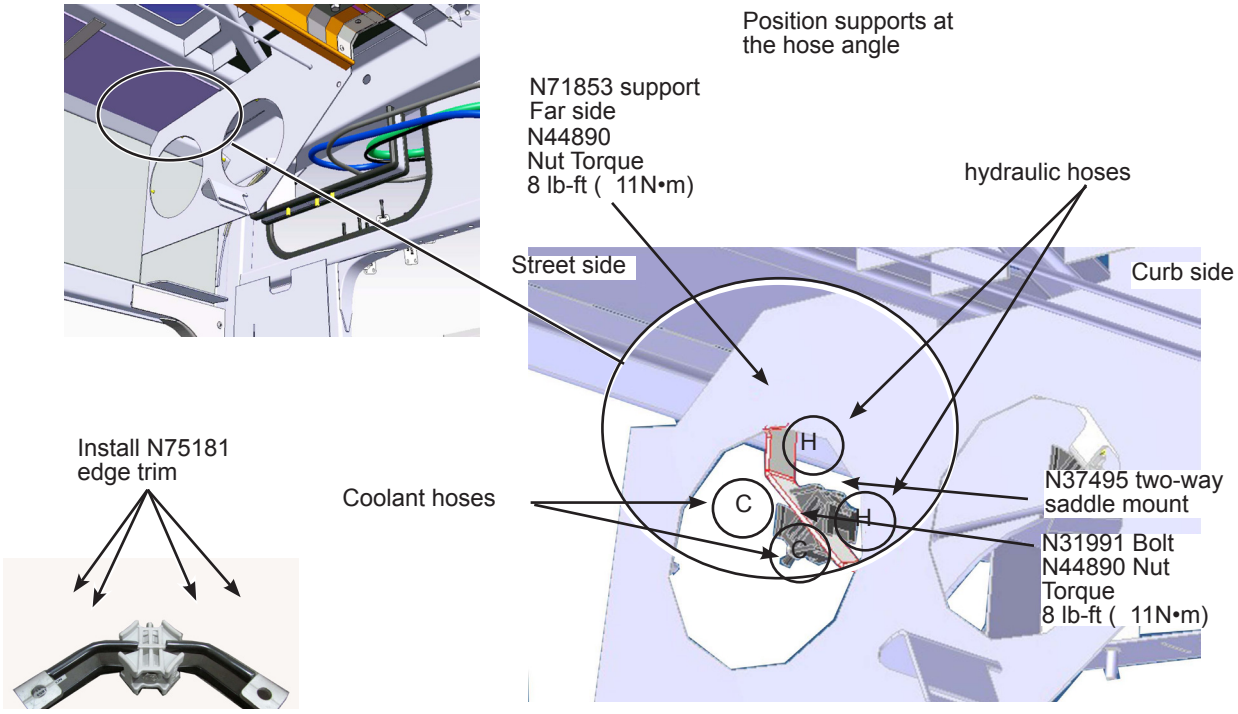

Figure 10 - Bracket Installation

1.25. Install N75181 edge trim around openings.

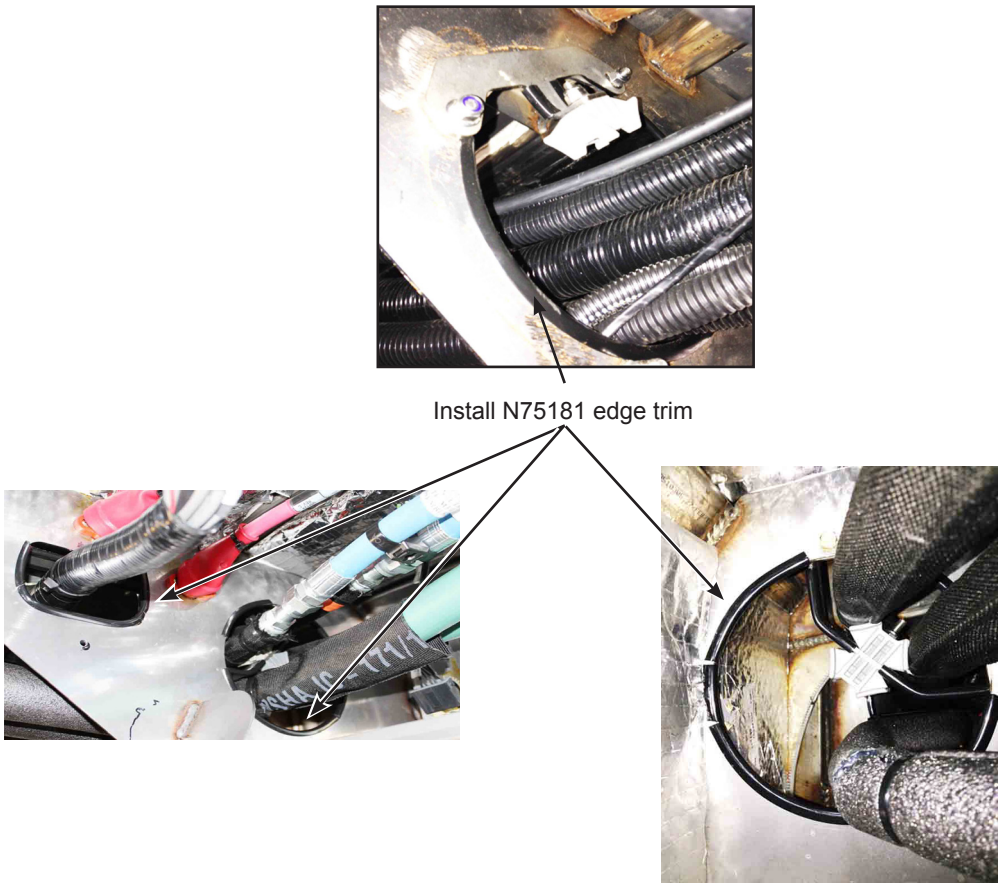

Figure 11 - Edge Trim

1.26. Install insulation on the A/C pipes. Use hot glue sticks and N14529 tie wraps to secure them in place.

1.27. Install the new A/C pipes. Front: N76611,N76610 and N76612. Rear: N76553, N76554 and N76551. (Step 20).

1.28. Tighten to the torque specified.

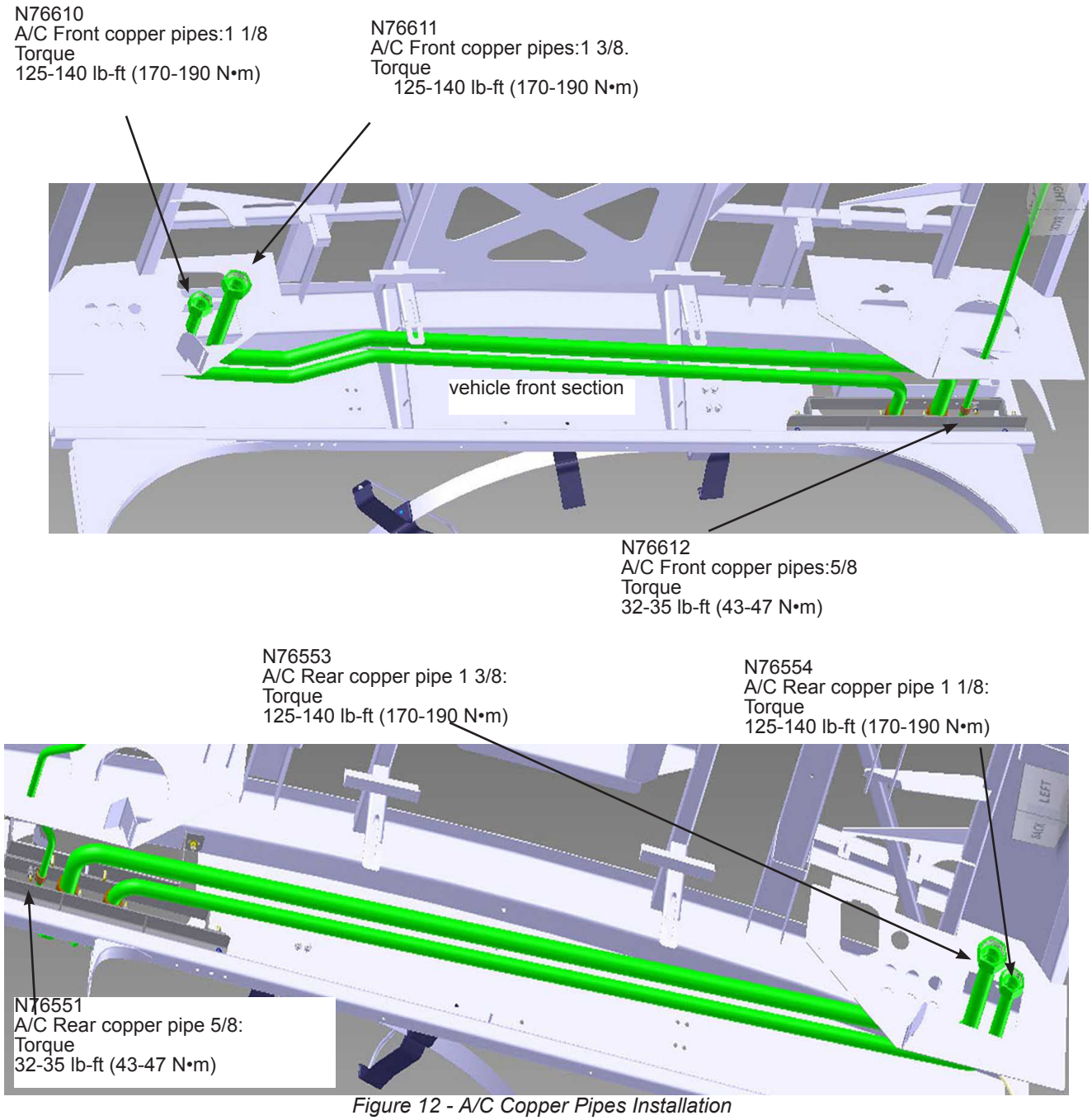

Figure 12 - A/C Copper Pipes Installation

1.29. Affix the copper pipes to the new N76423 front and N76404 rear interface bracket with the P-clamps and the hardware. Tighten to the torque specified. (Step 21)

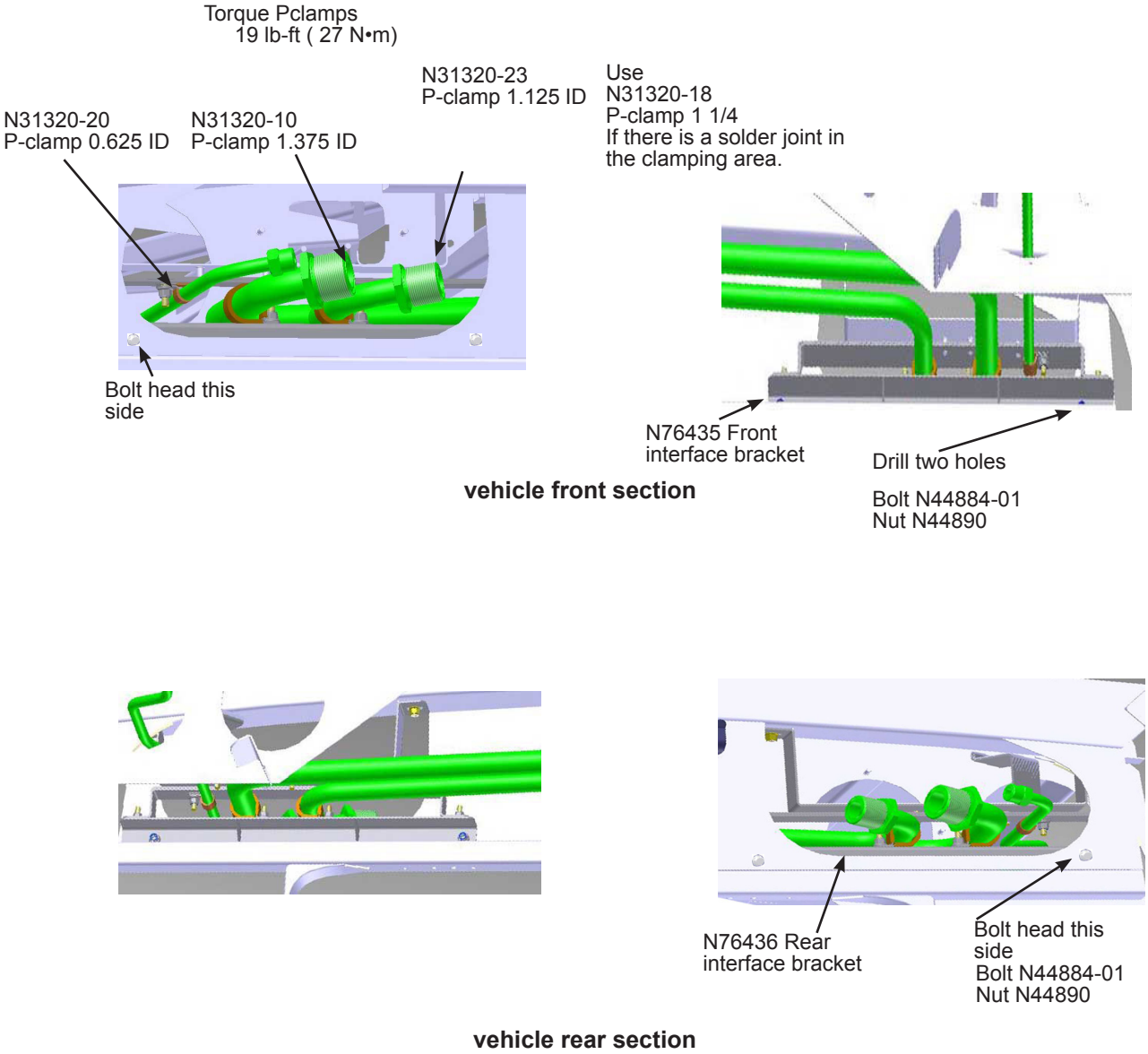

Figure 13 - A/C Copper Pipe Installation

1.30. Drill two 5/16 holes in the structure. Use the interface bracket as a template.
1.31. Affix the interface bracket support with two N44884-01 M6 bolts and N44890 nuts.
1.32. Install edge trim on two sides of the N76405 upper interface support.
1.33. Install three tie wraps as shown. Tie wraps lock the mechanism underneath the interface support.
1.34. Affix the top interface bracket on top of the interface bracket with two N43233 nuts.
1.35. Install safe edge on front and rear cut outs.

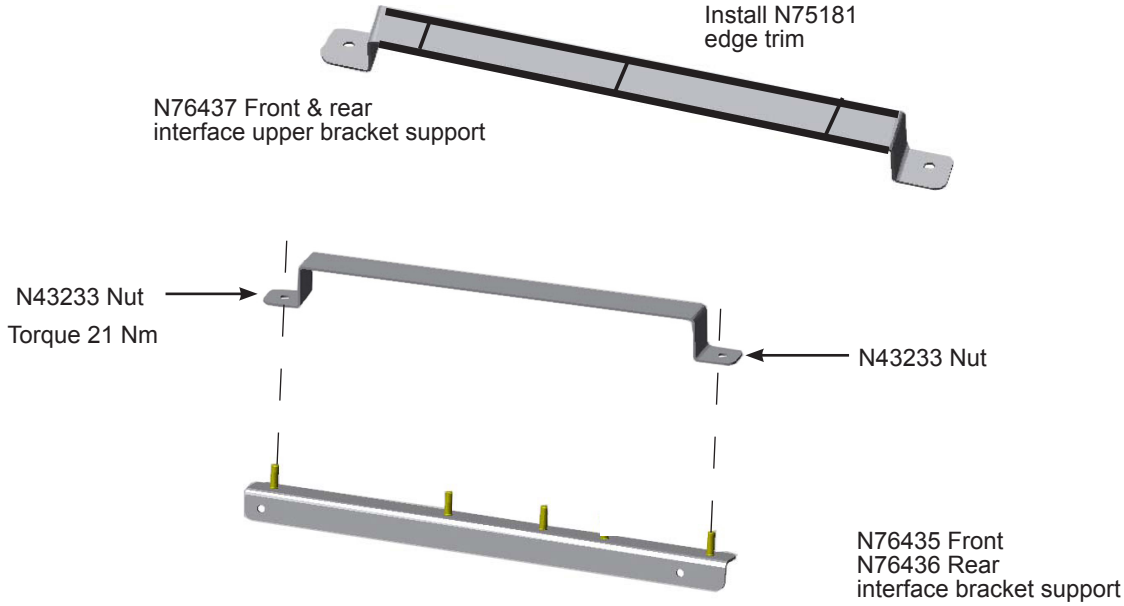

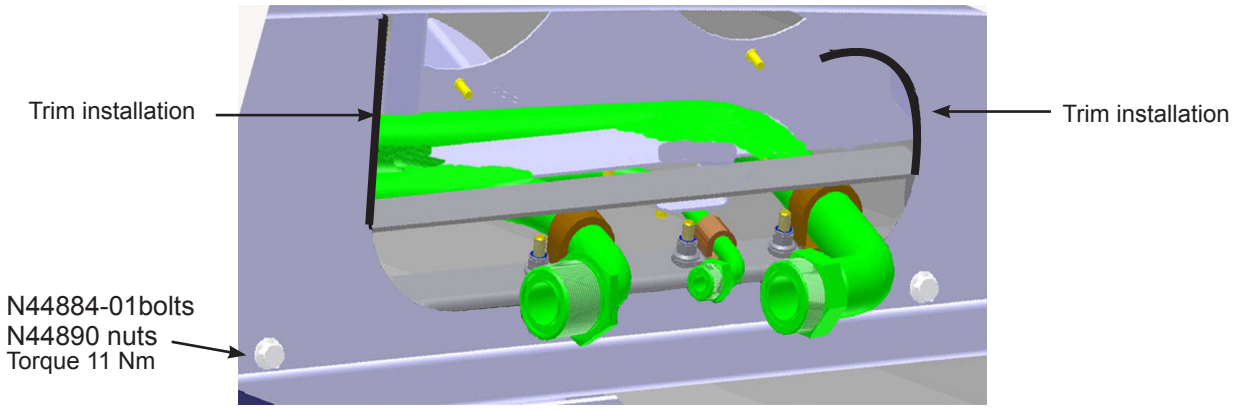

Figure 14 - New Interface Bracket

Ensure that when installing any bracket or support, there is no protective trim between the bracket and the fixing surface.

ROUTING SEQUENCE

Coolants (STEP 22)

1.36. Lay the two N74177 flexible coolant hoses along the suspended rail.

1.37. Affix the two front ends with a hose clamp.

1.38. Apply 6 to 6.5 Nm (53 to 58 lb-in) torque to the breeze hose clamps.

1.39. Refer to section 99: General practices in the Nova bus Maintenance manual for the installation of the breeze clamps.

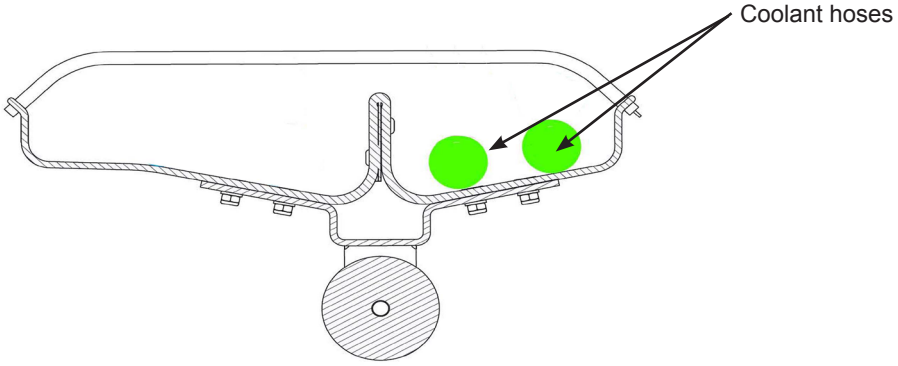

Figure 15 - Coolant Hose Installation

A/C HOSES (STEP 23)

1.40. Install N77181 coolant hose protector above A/C connectors using N14529 tie wraps

1.41. Replace all A/C pipe gasket O-ring. Lubricate O-rings with A/C compressor oil.

1.42. Install the three N95812-13 (suction), N95795-04 (liquid) and N95812-14 (discharge) A/C hoses on the trays as shown.

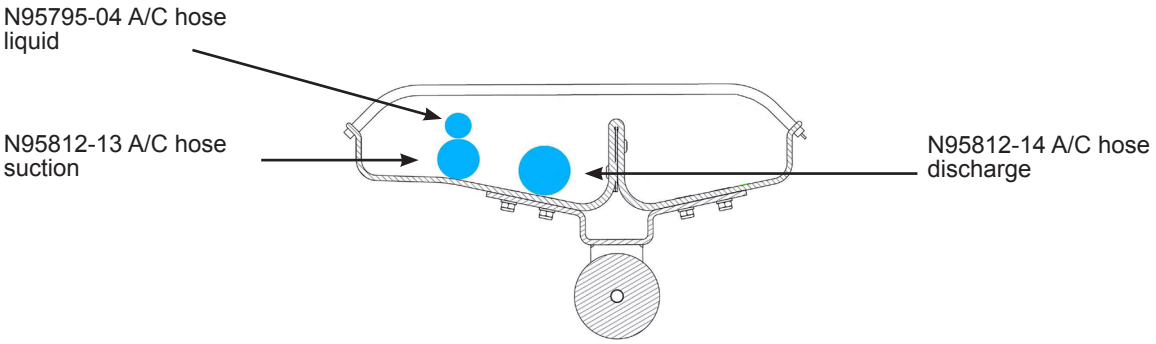

Figure 16 - A/C Coolant Hose Installation

1.43. Torque all A/C connectors as shown.

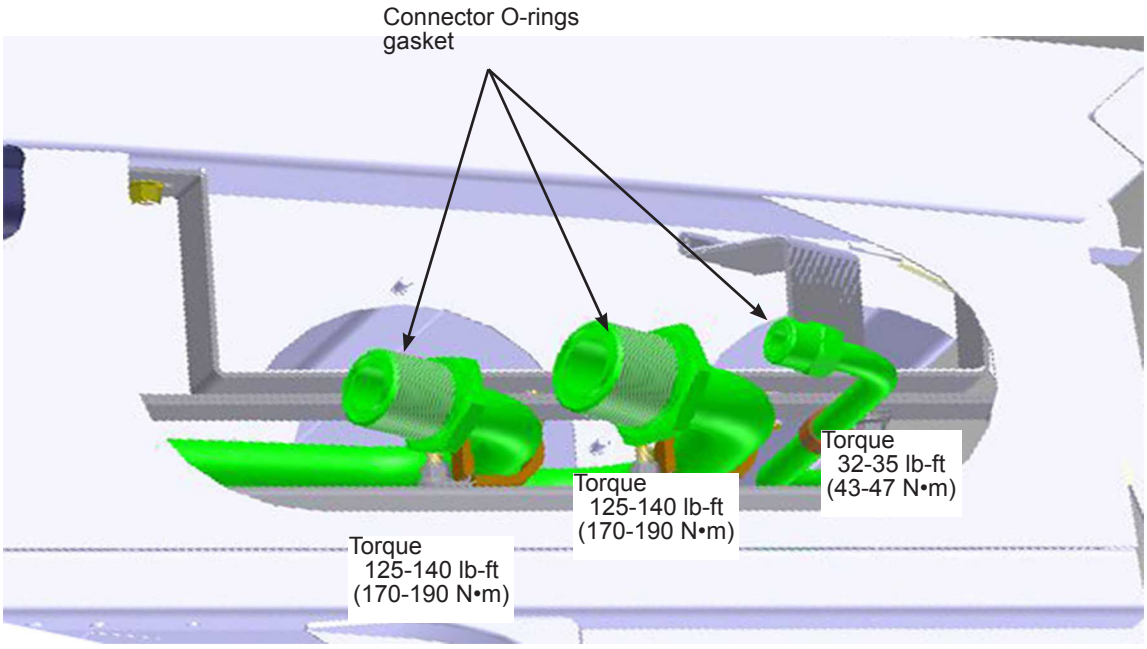

Figure 17 - A/C Coolant Hose Torque

HYDRAULIC LINES (STEP 24)

1.44. Install N95808-01 and N95808-03 hydraulic hoses into the hydraulic circuit in the front. N95808- 03 is installed on the vehicle curb side.

1.45. Lay the two flexible hydraulic hoses on the A/C discharge hose as shown.

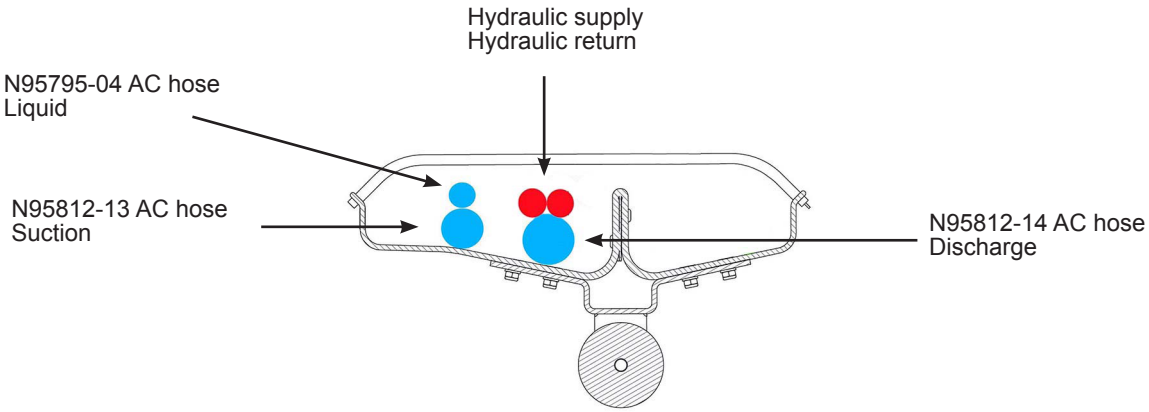

Figure 18 - Hydraulic Line Installation

1.46. Torque all hydraulic connectors on the hoses and pipes as shown.

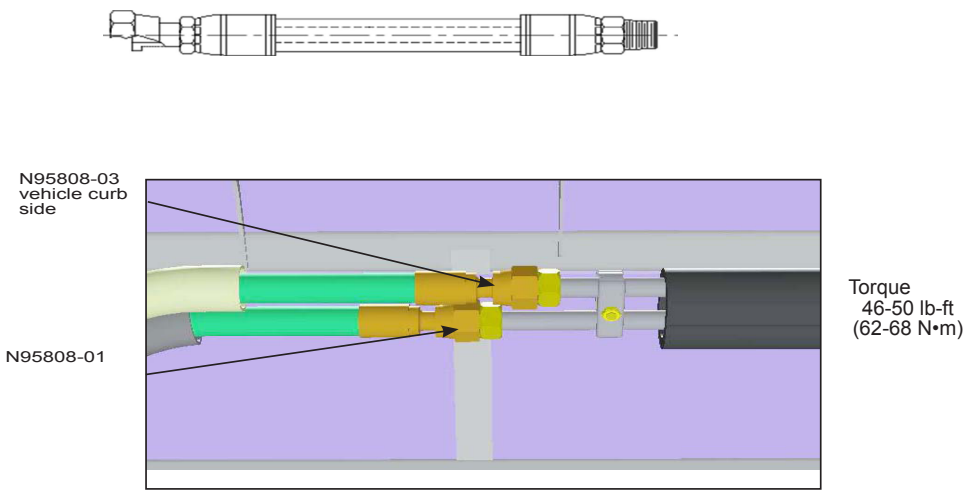

Figure 19 - Hydraulic Lines Torque

1.47. Pressure test A/C system to 250 lb.

1.48. Vacuum the A/C system to 500 microns.

1.49. Install two N77181 coolant hose protector above A/C connectors using N14529 tie wraps. In the front and rear sections of the vehicle. Installation on the identified A/C connector only.

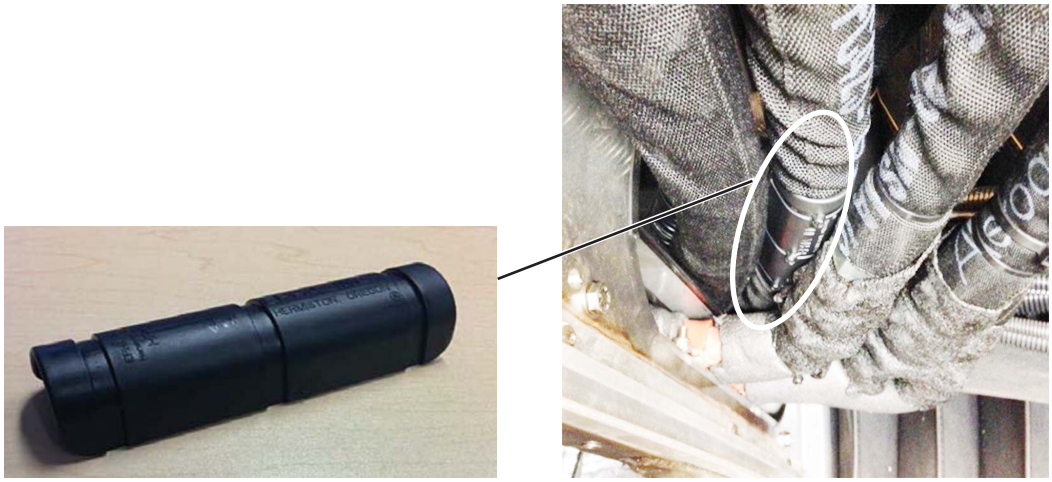

N77181 hose protection

Figure 20 - A/C Hose Protection

MAIN ELECTRICAL (STEP 25)

1.50. Install the main electrical harness on top of the coolant as shown. Install two tie wraps per section.

1.51. Tighten the excess slack from the main harness in the rear vehicle section.

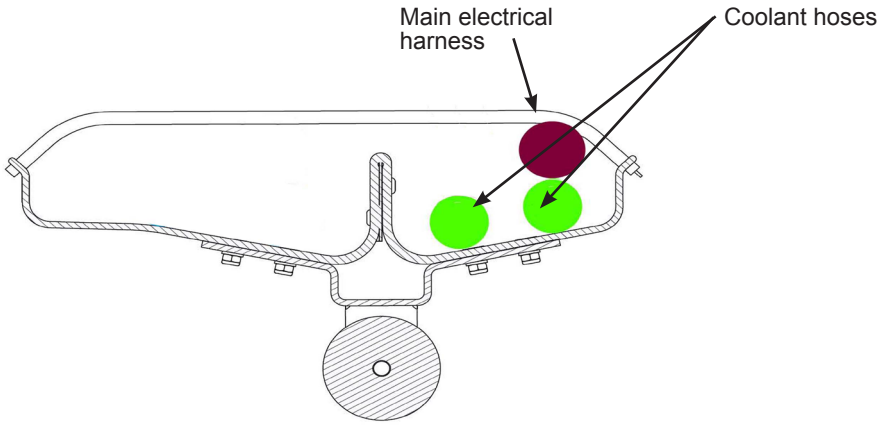

Figure 21 - Main Electrical Installation

POWER CABLES

1.52. Connect 24 V cable at front of the vehicle (STEP 26)

1.53. 24 V cables must run from the front of the bus towards the rear, with two tie wraps between each tray. All slack must be brought to the back.

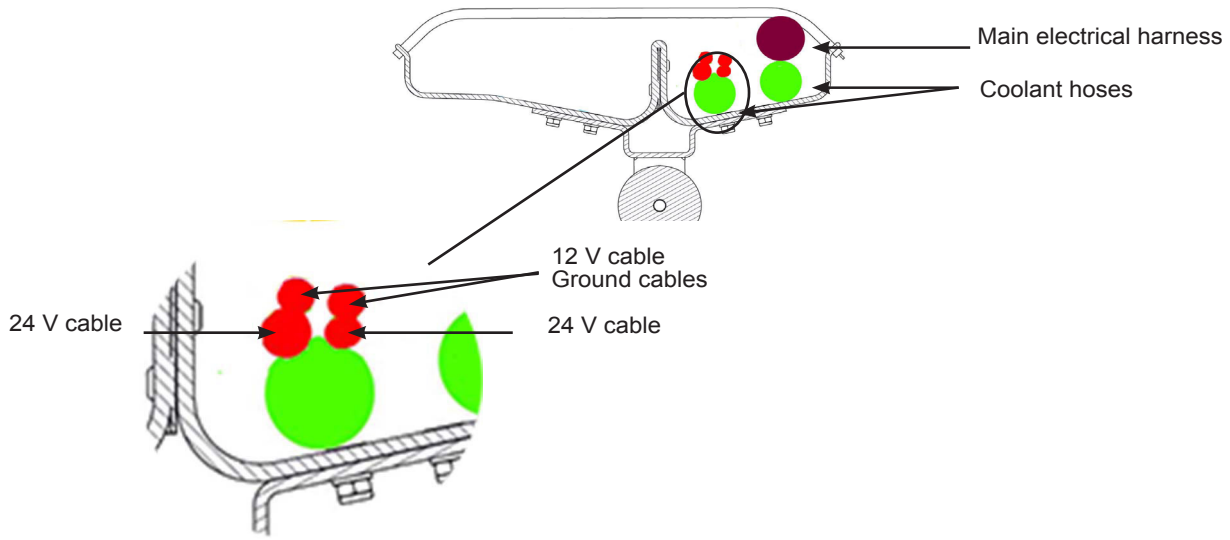

Figure 22 - Power Cable Installation

1.54. Create a bundle with the ground wire, 12 Volts, communication harness and accessories. The bundle slack must be secured in the front baselight. (STEP 27)

1.55. Lay bundle on top of 24 V cables.

1.56. Cut the excess of two rear end coolant hoses and affix to the cooper hose connector with breeze clamps.

1.57. Apply 6 to 6.5 Nm (53 to 58 lb-in) torque to the breeze hose clamps.

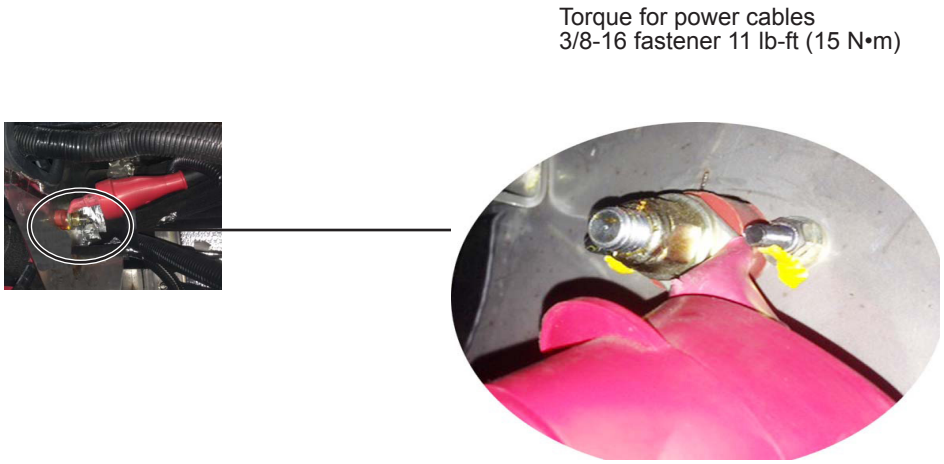

Figure 23 - Cable Connector Installation

1.58. Attach the ground cable surplus in the front baselight.

1.59. Install ground cable. Apply the torque specified.

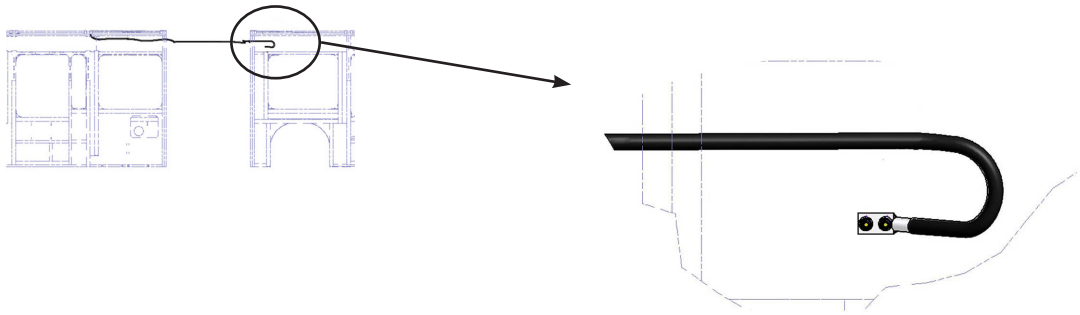

Torque for ground cable
20 lb-ft (27 N•m)

Figure 24 - Ground Cable Installation

PNEUMATIC HOSES (STEP 28)

1.60. Install the pneumatic hoses on top of the accessories cables as shown.

1.61. Attach the pneumatic hose surplus in the rear bulkhead.

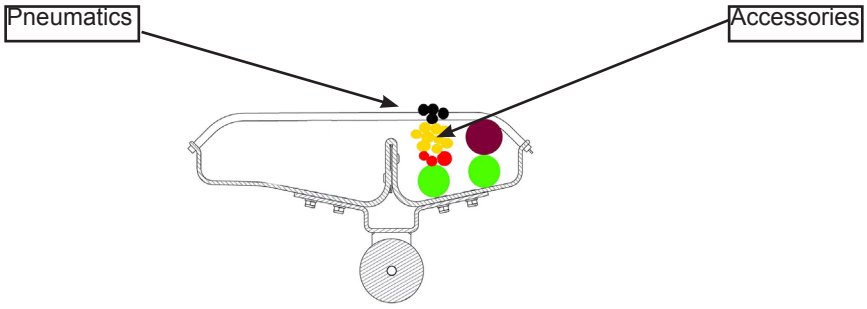

Figure 25 - Pneumatic Hose Installation

1.62. Retain bundles with two tie wraps centered between each tray.

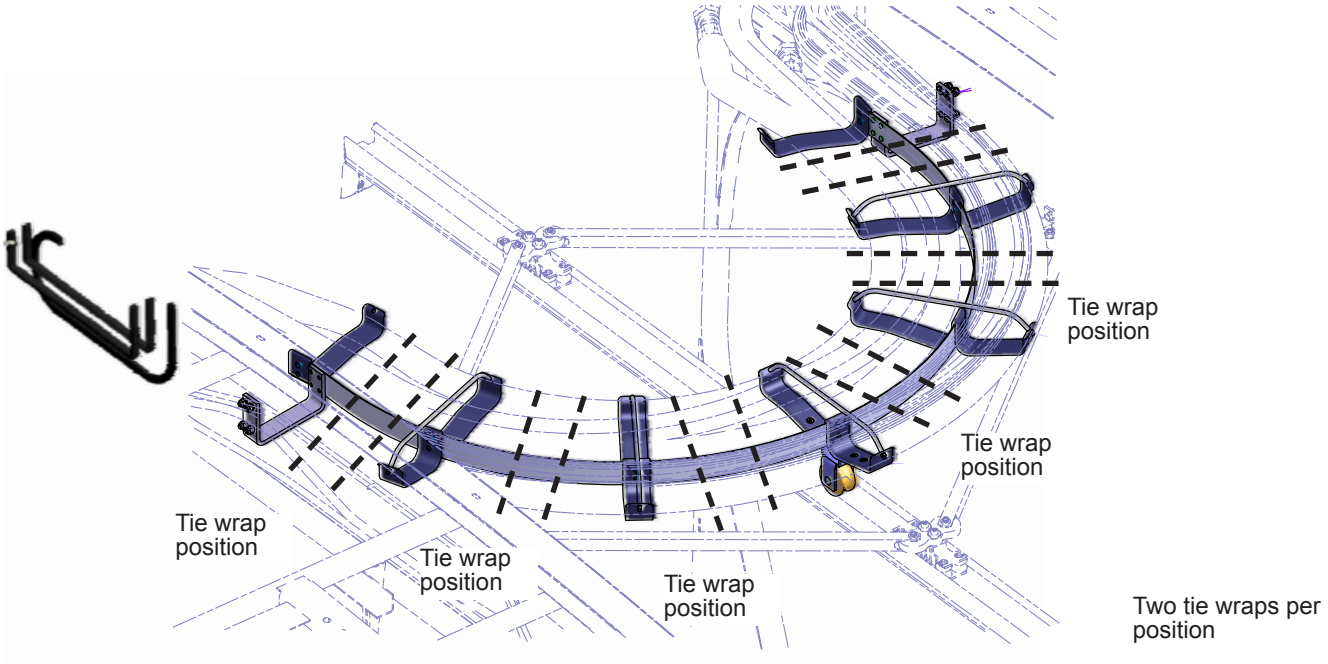

Figure 26 - Tie Wraps Installation

1.63. The lock mechanism should be positioned toward the outside. Do not install between bundles. (STEP 29)

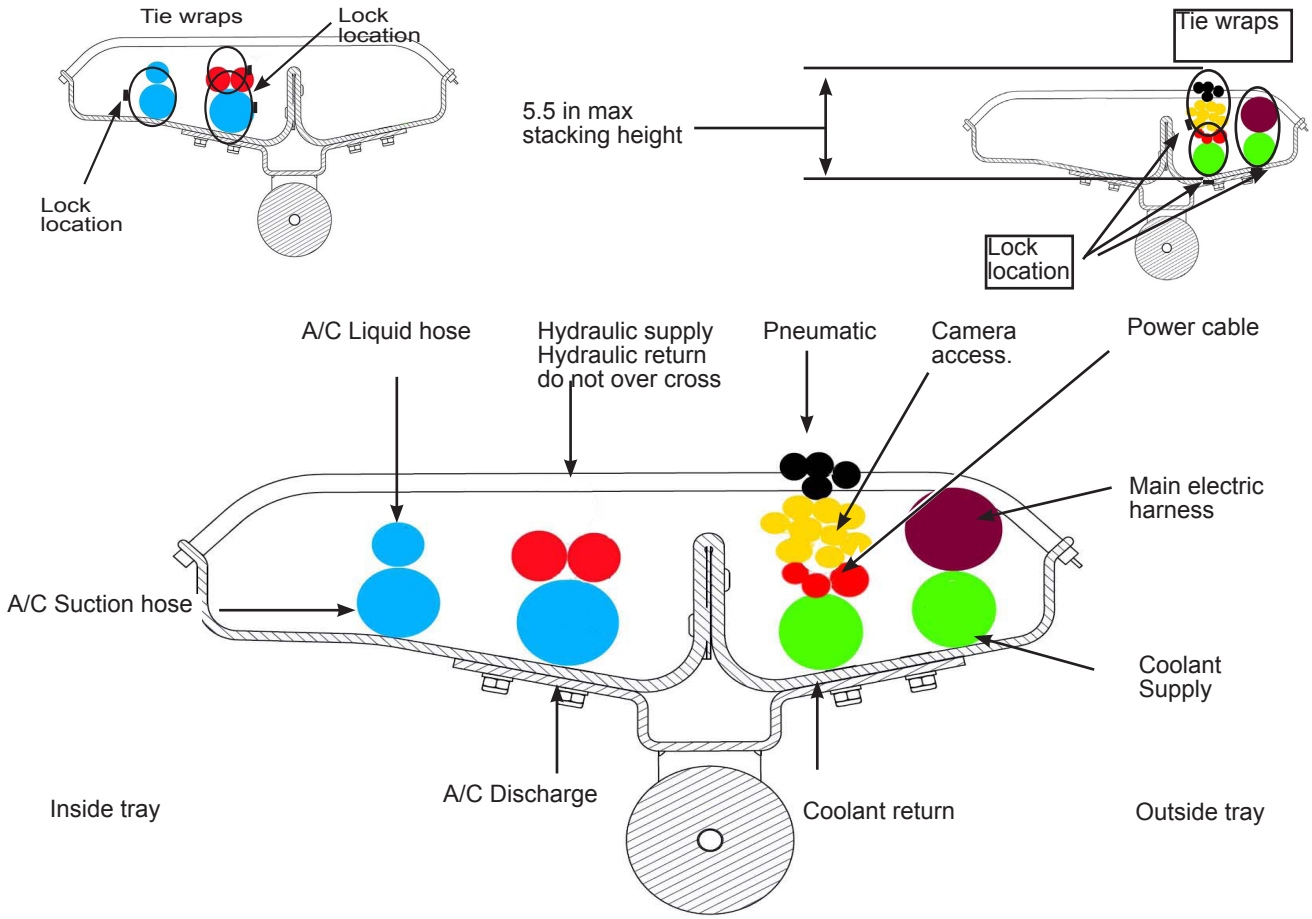

Figure 27 - Hoses and Harnesses, Final Result

PREPARATION FOR THE INSTALLATION OF PROTECTION OF THE COOLANT HOSES.

1.64. Drill four holes in the approximate location shown.

1.65. Install two N37495 two way saddles and two N38350 heavy duty mounts with N44691 bolts and N44890 lock nuts.

1.66. Install in the front and rear, two 13 in. 8860534 flexible tubes with two N68034 tie wraps as shown.

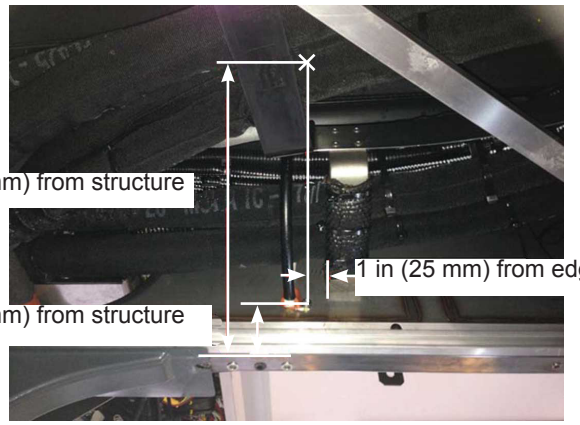

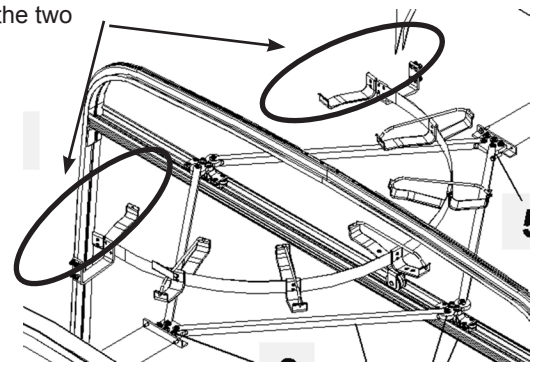

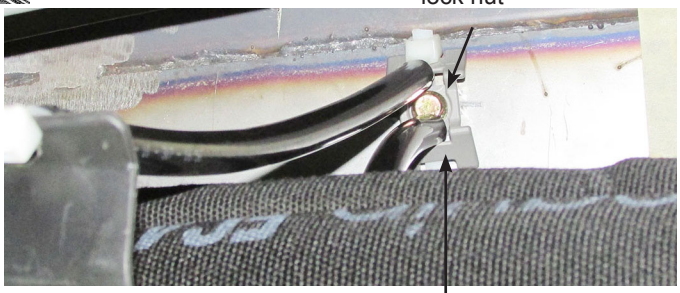

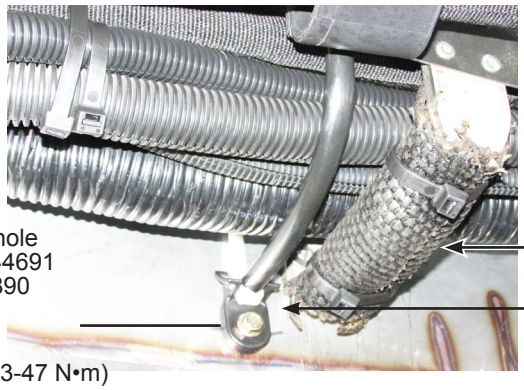

Figure 28 - Two Way Saddle Installation

1.67. Reposition the electrical cable so that it does not push against the tubular frame.

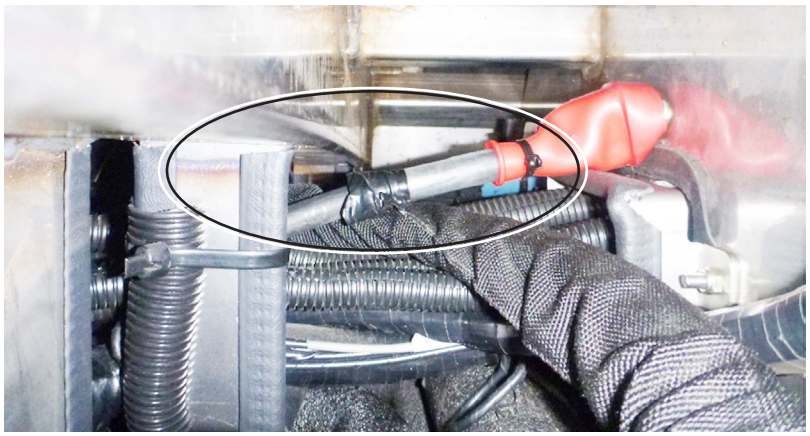

Figure 29 - Power Cable Routing

1.68. Route and tie harness neatly in the baselights, making sure they will not contact the access panels in the front and the rear baselights.

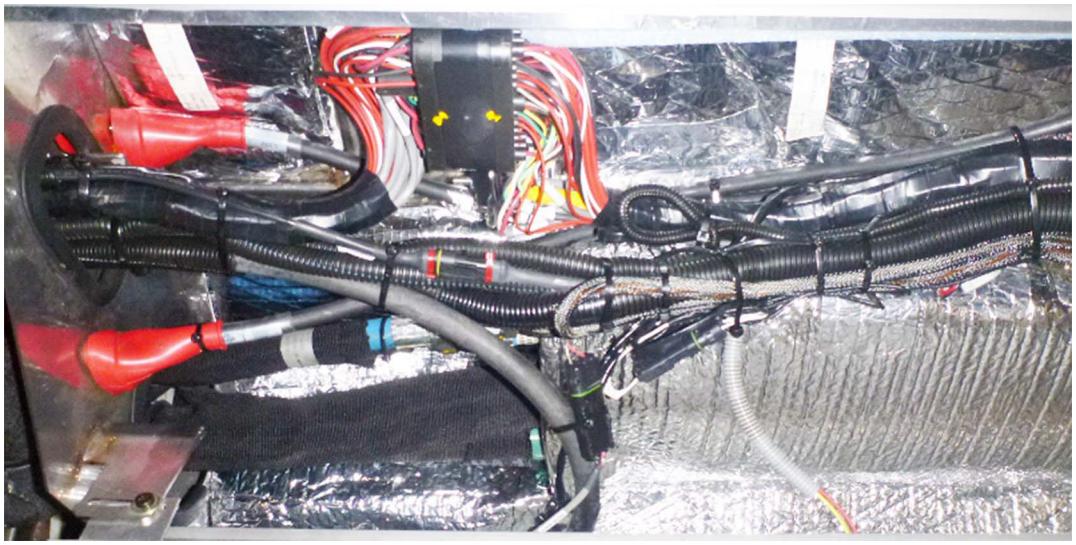

Figure 30 - Baselight Routing

1.69. Attach the coolant hoses with a double tie wrap in the front and rear bulkhead.

1.70. All routings should be evenly spaced (5/8") in the suspended rail. Use the 'W' shaped jigs to validate the spacing.

Coolant hoses with a banana shapes are to long. Cut the excess length.

Affix with one double tie wrap

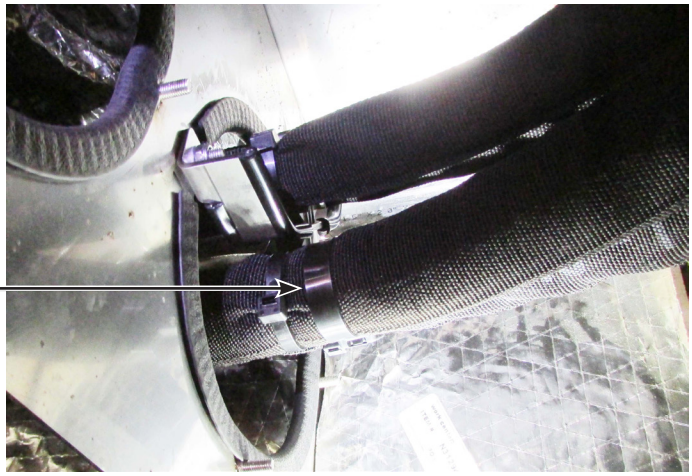

'W' shaped jigs

Figure 31 - Securing Harnesses and Hoses

FILLLING

Ensure that all coolants, hydraulic and A/C fluids, are at specified levels. (step 30).

1.71. Add oil to the A/C compressor.

1.72. Fill the coolant fluid. Use the retained fluid.

1.73. Fill the hydraulic fluid. Use the retained fluid.

1.74. Reinstall at its original condition the baselight insulation and other protective material.

1.75. Remove bolts and nuts and install bolts head up, on top of the stabilizer bars. Apply to the front and rear of the stabilizer mechanism. (step 31).

1.76. Affix the stabilizer bar at its original position with the retained hardware.

Torque
8 lb-ft (11 N•m)

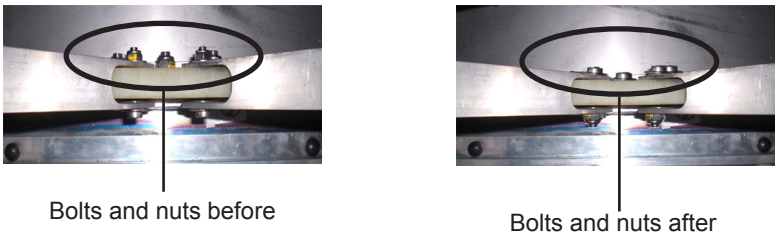

Figure 32 - Install Stabiliser Bolts Head Up

PRE-INSPECTION

With the vehicle in a straight position. (step 32).

1.77. Perform the pre inspection process.

1.78. Install tie wrap bridges between the trays, in seven places.

1.79. Ensure that the tie wrap bridge assemblies clear the bottom of trays from the stabilizer bar.

1.80. Tie wraps should not be too tight at bending angles. **(step 33).**

1.81. Route and tie hoses and harness to ensure that there is no contact with the bellows. They should not be tied to any part of the EGS to allow freedom of movement.

1.81.1. Make sure all hoses and cables are spread evenly in the suspended rail.

1.81.2. Ensure all the hoses and harnesses are properly secured in the baselights.

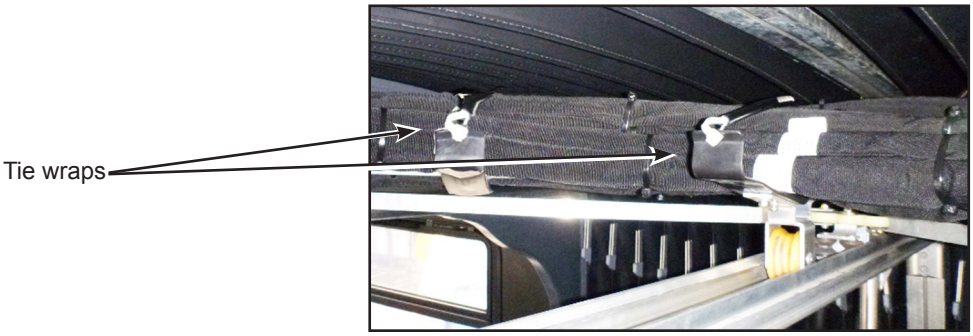

Figure 33 - Tie Wraps Installation

1.81.3. Make sure to leave a distance of 5/8 between hose stacks. **(step 34).**

1.81.4. Ensure that there is no contact between the hoses/cables and the cut-outs on the bulkhead panels (approximately 1/2" distance). **(step 35).**

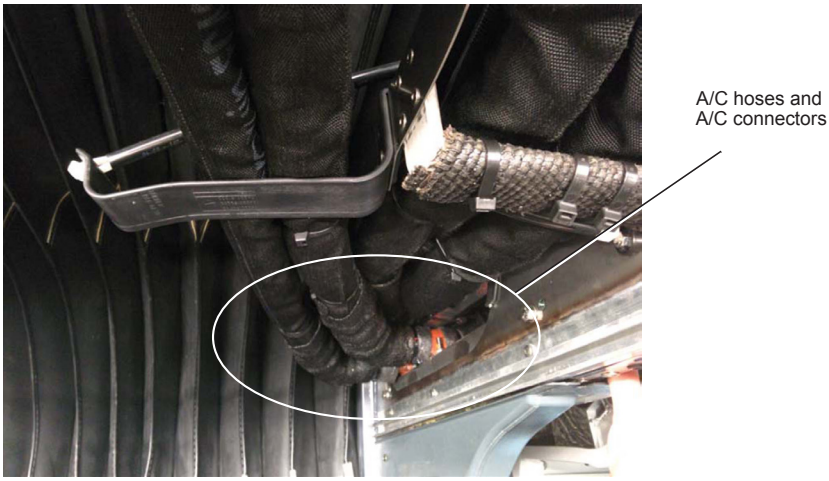

Figure 34 - No Contact Between Hoses and Surrounding Components

1.81.5. Contact with bellow is not acceptable. **(step 36).**

Figure 35 - Avoid Contact With Surrounding Components

1.81.6. Contact with stabilizer bars is not acceptable.

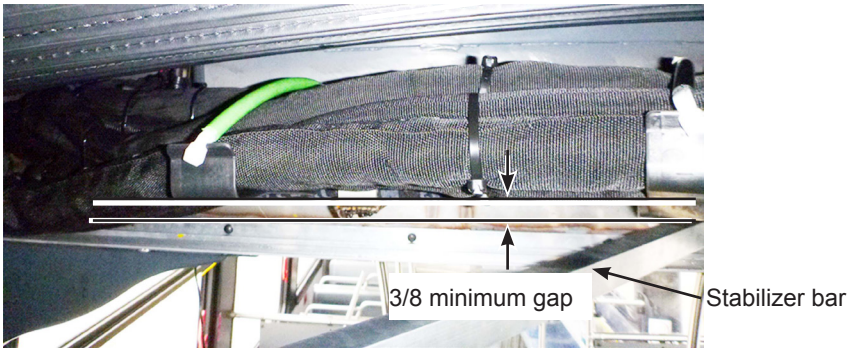

Figure 36 - Avoid Contact With Stabilizer Bar

1.81.7. Ensure there is no contact between electrical cables and the frame.
1.81.8. Ensure there is no pressure on the trays from the EGS suspended rail.

INSPECTION (Step 37)

Refer to inspection sheet in annex. This sheet must be filled out for each bus by the person performing the retrofit. Below are the major items to look for.

During the inspection process, ensure that there is no tension between the bundle and the blades. Contact between the bundles and the blade is allowed.

1.82. Perform the inspection.

- 1.82.1. Position the vehicle in a left jack-knife by means of backing it into this position. (Do not bring artic joint to hard stop).
- 1.82.2. Ensure that the hoses and harnesses do not move in the baselight.
- 1.82.3. Slight contact between hose stacks is acceptable as long as there is no tension.
- 1.82.4. Slight contact with blade is acceptable as long as there is no tension on the blade.
- 1.82.5. Ensure that there is no contact between the hoses/cables and the cut-outs on the bulkhead panels (approximately 1/2" distance).
- 1.82.6. Contact with bellow is not acceptable.
- 1.82.7. Contact with stabilizer bars is not acceptable.
- 1.82.8. Ensure there is no contact between electrical cables and the frame.
- 1.82.9. Ensure there is no pressure on the trays from the EGS suspended rail.
- 1.82.10. Finalize the installation of all tie wraps.

Make sure that the hose protector is installed correctly in the front and rear sections.

Minor adjustment may be necessary to allow unrestricted movement of the cables and hoses with the energy guidance system. Major adjustments may require more extensive work and re-validation

1.83. Repeat inspection in right jack-knife position. (Step 38)

***Under normal operating conditions, the articulation joint never reaches a hard stop (54°). it is only when backing up the vehicle in very narrow areas that a driver will flip the emergency release switch and that the vehicle will reach this extreme condition. This procedure is intended to verify the position of the component under normal fatigue conditions only (51°).**

****Note: minimal contact/slight contact is defined by being able to slide your finger between the two components without feeling much discomfort.**

CLOSING

1.84. Ensure that N34049 cork tape is applied where needed, particularly on all A/C hose connectors from P-clamp to A/C hose and exposed sections of the copper pipes. (Step 39)

Figure 37 - N34049 Cork Tape Installation

1.85. Fill the A/C system with freon. (Step 40)

1.86. Record A/C system pressures. (Step 41)

1.87. Install the baselight panels, bulkhead panels, stanchions and roof cover.(Step 42)

1.88. Clean bus.(Step 43). ❖

ANNEX

QUALITY ASSURANCE CHECKLIST FOR EGS RETROFIT

UNIT #_____ MILEAGE _____ LOCATION _____ SERVICE BULLETIN # _____

ITEM		TASK	DATE	COMPLETED BY	INSPECTED BY
PREPARATION AND DISASSEMBLING					
STEP 1.		MAKE SURE THE BUS IS STRAIGHT BEFORE STARTING RETROFIT			
STEP 2.		TURN OFF BATTERY DISCONNECT SWITCH AND LOCKOUT, TO MAKE SURE THERE IS NO CURRENT IN THE ELECTRICAL WIRES BEFORE PERFORMING THE FOLLOWING STEPS			
STEP 3.		ATTACH FREON RECOVERY SYSTEM			
	3.1	FREON RECOVERED _____LBS			
STEP 4.		REMOVE ARTIC JOINT CURTAIN (CEILING COVER)			
STEP 5.		REMOVE BULKHEAD PANELS			
STEP 6.		REMOVE AND IDENTIFY BASE LIGHT PANELS			
STEP 7.		REMOVE STANTIONS			
STEP 8.		UNBOLT STABILIZER BARS AND ATTACH TO CENTER GUIDING PROFILE			
STEP 9.		PRELIMINARY INSPECTION (Record all required repairs in the section provided bellow)			
	9.1	HYDRAULIC LINES			
	9.2	PNEUMATIC LINES			
	9.3	MAIN ELECTRICAL HARNESS			
	9.4	POWER CABLES			
	9.5	COMMUNICATION HARNESS			
	9.6	DAMAGE TO EGS CARRIER OR TRAYS (5000 SERIES ONLY)			
STEP 10.		CLOSE WATER VALVES FOR HEATER LOOP AND DRAIN COOLANT			
	10.1	RETAIN COOLANT IN APPROPRIATE CONTAINER SO IT CAN BE REUSED			
	10.2	DISPOSE OF THE COOLANT HOSES			
STEP 11.		DRAIN HYDRAULIC OIL			
	11.1	DRAIN 5L OF OIL FROM THE HYDRAULIC FLUID RESERVOIR			
	11.2	RETAIN OIL IN APPROPRIATE CONTAINERS SO IT CAN BE REUSED			
STEP 12.		DISCONNECT GROUND CABLE, 12 VOLT CABLE, 24 VOLT CABLES, ACCESORIES AND COMMUNICATION HARNESSES FROM THE FRONT SECTION			
STEP 13.		REMOVE AND DISPOSE OF THE A/C HOSES			
STEP 14.		REPLACE EGS BLADE (1200 SERIES ONLY)			
	14.1	TORQUE EGS BRACKET BOLTS TO _____ LBS			
	14.2	REPLACE ANY DAMAGED EGS TRAYS (5000 SERIES ONLY)			
STEP 15.		REMOVE AND DISCARD A/C PIPES			
STEP 16.		REMOVE PLASTIC CYLINDERS IN THE BASELIGHTS			
STEP 17.		CUT EXISTING BULKHEAD BRACKET			
INSTALLATION					
STEP 18.		TEMPORARILY POSITION NEW BULKHEAD BRACKETS USING CLAMPS			
STEP 19.		INSTALL ANTI-CHAFFING SUPPORT BRACKETS IN BASELIGHTS			
	19.1	INSTALL SAFE EDGE ON BRACKETS BEFORE INSTALLATION			
	19.2	TORQUE M6 BOLTS TO _____ LBS			
STEP 20.		INSTALL NEW A/C PIPES			
	20.1	TORQUE -20 CONNECTORS TO _____ LBS			
	20.2	TORQUE -24 CONNECTORS TO _____ LBS			
	20.3	TORQUE -10 CONNECTORS TO _____ LBS			
	20.4	TORQUE -08 CONNECTORS TO _____ LBS			
	20.5	TORQUE P-CLAMPS TO _____ LBS			
STEP 21.		FINALIZE THE INSTALLATION OF THE BULKHEAD BRACKETS			
	21.1	TORQUE M6 BOLTS TO _____ LBS			
	21.2	INSTALL SAFE EDGE ON FRONT AND REAR CUT OUTS			
STEP 22.		INSTALL NEW COOLANT HOSES			
	22.1	TORQUE BREEZE CLAMPS TO _____ LBS			
	22.2	INSTALL COOLANT HOSE PROTECTORS ABOVE A/C CONNECTORS			
STEP 23.		INSTALL A/C HOSES			
	23.1	REPLACE O-RINGS			
	23.2	TORQUE -24 CONNECTORS TO _____ LBS			
	23.3	TORQUE -20 CONNECTORS TO _____ LBS			
	23.4	TORQUE -08 CONNECTORS TO _____ LBS			
	23.5	PRESSURE TEST AC SYSTEM TO 250 LBS			
	23.6	VACUUM SYSTEM TO 500 MICRONS			
	23.7	RECORD MICRON LVL _____			
STEP 24.		INSTALL HYDRAULIC LINE EXTENSIONS			
	24.1	TORQUE TO ____LBS			
STEP 25.		INSTALL MAIN ELECTRICAL HARNESS ON TOP OF COOLANT HOSE			
	25.1	ATTACH SURPLUS IN REAR BASELIGHT			
STEP 26.		INSTALL 24V CABLES ON THE COOLANT HOSE (RUN CABLES FROM FRONT TO REAR)			
	26.1	REPLACE SCREWS FOR 24V JUNCTION BLOCK (1200 SERIES ONLY)			

ITEM		TASK	DATE	COMPLETED BY	INSPECTED BY
STEP 27.		BUNDLE GROUND CABLE, 12 V CABLE, COMMUNICATION HARNESS AND ACCESSORIES			
	27.1	LAY BUNDLE ON TOP OF 24V CABLES AND FIX WITH TIE WRAPS			
	27.2	ATTACH ALL THE EXCESS LENGTH IN THE FRONT BASE LIGHT			
	27.3	TORQUE GROUND CABLE TO ____ LBS			
STEP 28.		INSTALL PNEUMATIC HOSES ON TOP OF THE BUNDLE			
	28.1	ATTACH PNEUMATIC HOSES SURPLUS IN THE REAR BULKHEAD			
STEP 29.		INSTALL LARGE TIE WRAP TO PREVENT CHAFFING OF COOLANT HOSES ON THE BLADE			
STEP 30.		FILL COOLANT, HYDRAULIC OIL AND COMPRESSOR OIL TO CORRECT LEVELS			
STEP 31.		INSTALL STABALIZER BARS WITH THE BOLT HEADS FACING UP			
	34.1	TORQUE BOLTS TO _____ LBS			
INSPECTION					
STEP 32.		WITH THE VEHICULE IN A STRAIGHT POSITION ENSURE THE EGS TRAYS ARE NOT TOUCHING THE STABALIZER BARS			
STEP 33.		ENSURE ALL HOSES AND HARNESSES ARE PROPERLY SECURED IN THE BASE LIGHTS			
STEP 34.		THERE SHOULD BE 5/8'' CLEARANCE BETWEEN EACH STACK OF HOSES			
STEP 35.		NO CONTACT BETWEEN ROUTINGS AND STRUCTURE			
STEP 36.		NO CONTACT BETWEEN ROUTINGS AND BELLOWS			
STEP 37.		BACK THE VEHICLE INTO A FULL JACK-KNIFE POSITION TO THE LEFT (DO NOT FLIP THE EMERGENCY OVERIDE SWITCH*)			
	37.1	ENSURE ALL HOSES AND HARNESSES ARE WELL SECURED IN BASELIGHTS AND HAVE NOT MOVED			
	37.2	SLIGHT CONTACT BETWEEN HOSE STACKS IS ACCEPTABLE AS LONG AS THERE IS NO TENSION**			
	37.3	SLIGHT CONTACT WITH BLADE IS ACCEPTABLE AS LONG AS THERE IS NO TENSION ON THE BLADE			
	37.4	ENSURE THERE IS NO CONTACT BETWEEN THE HOSES/CABLES AND THE CUT-OUT ON THE BULKHEAD PANELS			
	37.5	CONTACT WITH BELLOW IS NOT ACCEPTABLE			
	37.6	CONTACT WITH STABILIZER BARS IS NOT ACCEPTABLE			
	37.7	ENSURE THERE IS NO CONTACT BETWEEN ELECTRICAL CABLES AND THE FRAME			
	37.8	ENSURE THERE IS NO PRESSURE ON THE TRAYS OF THE EGS SUSPENDED RAIL			
		* UNDER NORMAL OPERATION CONDITIONS, THE ARTICULATION JOINT NEVER REACHES THE HARD STOP (54°). IT IS ONLY WHEN BACKING UP THE VEHICLE IN VERY NARROW AREAS THAT A DRIVER WILL FLIP THE EMERGENCY RELEASE SWITCH AND THAT THE VEHICLE WILL REACH THIS EXTREME CONDITION. THIS PROCEDURE IS INTENDED TO VERIFY THE POSITION OF THE COMPONENTS UNDER NORMAL FATIGUE CONDITIONS ONLY (±51°).			
		** NOTE : MINIMAL CONTACT/SLIGHT CONTACT IS DEFINED BY BEING ABLE TO SLIDE YOUR FINGER BETWEEN THE TWO COMPONENTS WITHOUT FEELING TOO MUCH DISCOMFORT.			
STEP 38.		REPEAT INSPECTION IN RIGHT JACK-KNIFE POSITION BY MEANS OF BACKING UP THE VEHICLE			
CLOSING					
STEP 39.		ENSURE CORK TAPE IS APPLIED ON ALL JOINTS AND EXPOSED SECTIONS OF PIPE			
STEP 40.		FILL FREON			
	40.1	QUANTITY OF FREON ADDED _____			
STEP 41.		RECORD A/C PRESSURES			
	45.1	LOW SIDE PRESSURE _____ PSI			
	45.2	HIGH SIDE PRESSURE _____ PSI			
STEP 42.		INSTALL BASE LIGHT PANELS, BULKHEAD PANELS AND CEILING COVER			
STEP 43.		CLEAN BUS			

*****A COPY OF THIS INSPECTION CHECK SHEET MUST BE KEPT ON RECORD*****

	Steps only applicable on the 5000 series vehicles
	Steps only applicable on the 1200 series vehicles

Additional repairs and campaigns	Description	DATE	COMPLETED BY	INSPECTED BY
1				
2				
3				
4				
5				

Retrofit final approval

Prevost inspector must have completed an entire inspection and have signed this document prior to presenting the vehicle to NYCT inspector

_____ _____
Prevost inspector NYCT inspector

_____ _____
Date Date