Bulletin No.: PIC6011

Date: Jul-2014

Service Bulletin

PRELIMINARY INFORMATION

Subject: **Vibration Heard Or Felt When A/C Turned On After A/C Compressor Installation**

Models: **2012 - 2014 Chevrolet Camaro**
Equipped with 3.6L Engine (RPO LFX)

The following diagnosis might be helpful if the vehicle exhibits the symptom(s) described in this PI.

Condition/Concern

A dealer may comment that a vibration is heard and/or felt in the vehicle shortly after a repair involving removal and installation of the air conditioning (A/C) compressor or the associated compressor bracket.

Note: This vibration will ONLY be present with AC compressor engaged and will stop immediately after the compressor clutch is disengaged.

It has been determined that this vibration may be caused by performing incorrect service procedures during the installation of the compressor and compressor bracket to the engine. The use of an air ratchet or impact gun during installation could over-torque the bolts. If these bolts are over-torqued during re-assembly they may stretch and bottom out in the threaded hole, allowing a transfer path for otherwise characteristic vibrations to make their way into the vehicle compartment.

Recommendation/Instructions

Inspect the bolts for evidence of being bottomed out or stretched. Witness marks on the tip of the bolt are a good indicator that the bolt has bottomed out in the threaded hole. Replace any damaged compressor fasteners or compressor bracket fasteners then torque to published specs.

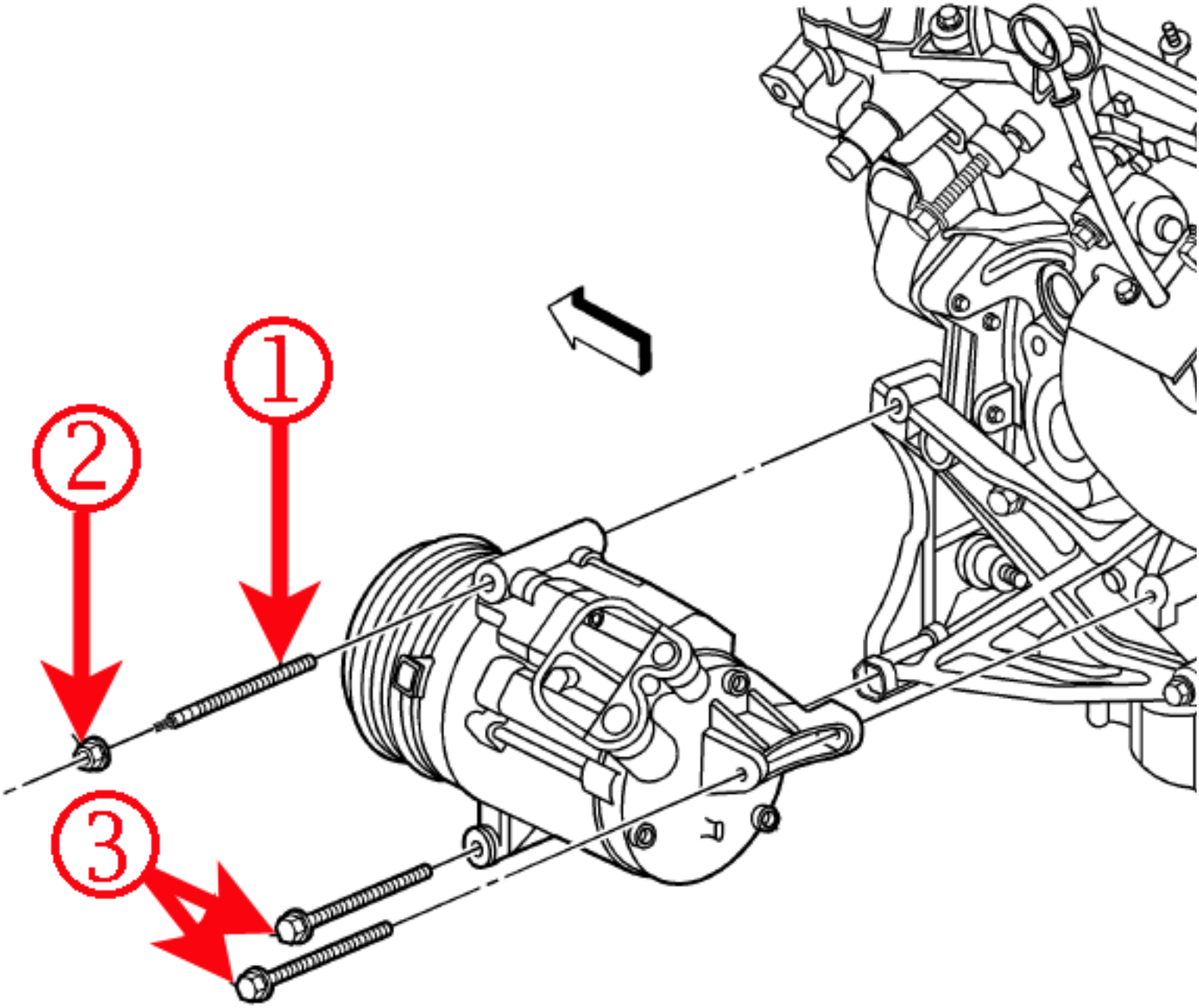

A/C Compressor Stud (1)

Caution: Refer to *Fastener Caution

Tighten 10 Nm (89 lb. in)

A/C Compressor Nut (2)

Caution: Refer to *Fastener Caution.

Tighten 22 Nm (16 lb. ft.)

A/C Compressor Bolt (3) (Qty: 2)

Caution: Refer to *Fastener Caution.

Tighten 22 Nm (16 lb. ft.)

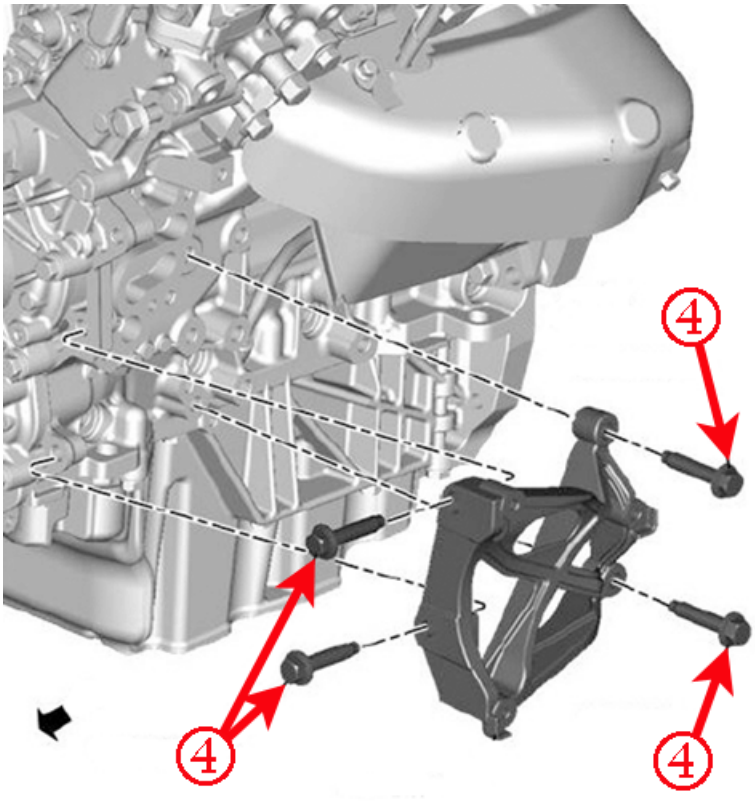

A/C Compressor Bracket Bolt (4) (Qty: 4)

Caution: Refer to *Fastener Caution.

Tighten 58 Nm (43 lb. ft.)

*Fastener Caution

Caution: Use the correct fastener in the correct location. Replacement fasteners must be the correct part number for that application. Do not use paints, lubricants, or corrosion inhibitors on fasteners, or fastener joint surfaces, unless specified. These coatings affect fastener torque and joint clamping force and may damage the fastener. Use the correct tightening sequence and specifications when installing fasteners in order to avoid damage to parts and systems. When using fasteners that are threaded directly into plastic, use extreme care not to strip the mating plastic part(s). Use hand tools only, and do not use any kind of impact or power tools. Fastener should be hand tightened, fully seated, and not stripped.

Warranty Information

There is not a labor time or labor operation associated with this PI because the labor time is considered part of the original repair. :

Please follow this diagnostic or repair process thoroughly and complete each step. If the condition exhibited is resolved without completing every step, the remaining steps do not need to be performed.

GM bulletins are intended for use by professional technicians, NOT a "do-it-yourselfer". They are written to inform these technicians of conditions that may occur on some vehicles, or to provide information that could assist in the proper service of a vehicle. Properly trained technicians have the equipment, tools, safety instructions, and know-how to do a job properly and safely. If a condition is described, DO NOT assume that the bulletin applies to your vehicle, or that your vehicle will have that condition. See your GM dealer for information on whether your vehicle may benefit from the information.

WE SUPPORT VOLUNTARY TECHNICIAN CERTIFICATION