NOVA BUS

SERVICE BULLETIN BS3086ER1

REFERENCE:	Nova Bus Manuals
SECTION:	09: Engine and accessories
RS Nº:	MQR 7621-273
EFFECTIVE IN PROD.:	L731 (2012DE)

APPLICATION DEADLINE: 2015MA01
CLAIM REFERENCE NUMBER: WB-3086

SUBJECT:	Engine mount rubber isolators.
JUSTIFICATION:	Rubber isolators with a new design are now available.

LEVEL	DESCRIPTION	DIRECT CHARGES		TIME
		LABOUR	MATERIAL	
1	Change the engine mount rubber isolators	Nova Bus	Nova Bus	6h
2	–	–	–	–

MATERIAL

QTY	PART Nº	REV.	DESCRIPTION	REPLACES PART N°
LEVEL 1				
2	N68290	A	Rubber mount	–
2	N69398	–	Shim	–
8	N56322	–	M10X50 bolt	–
4	N66492	A	Rubber mount	–
8	N31667	–	Lockwasher	–
8	N45429	–	M16X45 bolt	–
LEVEL 2				
–	–	–	–	–

Materials will be available within 112 days. To order, please contact Prevost Parts by phone at 1-800-771-6682, by fax at 1-888-668-2555 or by email at prevostparts.commandes@volvo.com. Specify document number, quantity of parts required and shipping address.

DISPOSAL OF PARTS

REMOVED PARTS ARE:	DISCARDED *	RETAINED	* Dispose of the unused parts and the defective parts in accordance with local environmental standards in effect.
	Yes	–	

REVISION HISTORY

REV.	DATE	CHANGE DESCRIPTION	WRITTEN BY
NR	2014JA13	Initial release	Bertrand Plouffe
R1	2014AU28	Page 7, Figure 9: torque was 300 lb-ft is 221 lb-ft.	Wilder Galiano

APPROVED BY: Daniel Theriault

Digitally signed by Daniel Theriault
DN: cn=Daniel Theriault, o=Nova Bus, ou=Publication, email=daniel.theriault@volvo.com, c=CA
Date: 2014.08.28 09:55:28 -04'00'

CLIENT	ORDER	ROAD NUMBER		VIN (2NVY/4RKY...)		QTY
		FROM	TO	FROM	TO	
New York City Transit - New York	L620	8015	8074	L82U2B4000062	L82U7B4000123	60
New York City Transit - New York	L621	8075	8089	L82U9B4000124	L82U9B4000138	15
New York City Transit - New York	L643	5895	5895	S92U1B4000143	S92U1B4000143	1
New York City Transit - New York	L670	5771	5894	S92U9B4000147	S92U8C4500060	124
New York City Transit - New York	L670	5770	5770	S92UXC4500061	S92UXC4500061	1
New York City Transit - New York	L681	5896	5986	S92U2C4500023	S92U9C4500164	91
New York City Transit - New York	L681	5253	5283	S92U0C4500165	S92U9C4500195	31
New York City Transit - New York	L692	5284	5363	S92U3C4500158	S92U3D4500274	80

WARNING

Follow your internal safety procedures.

PROCEDURE

1.1. Remove rear bumper. Retain the hardware

1.2. Raise the vehicle

NOTE

Use appropriate hoisting equipment for your protection. For information on hoisting and towing of the vehicle, see section 18: HOISTING AND TOWING in the Nova Bus maintenance manual. Respect your internal safety procedures.

1.3. Remove the transmission access panel. located inside the vehicle, at the rear. See Figure 1.

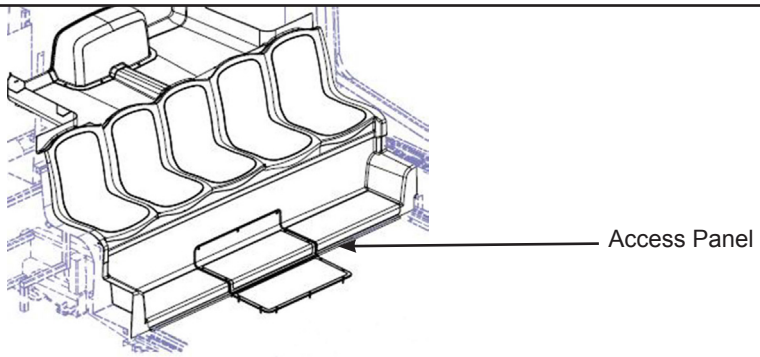

Figure 1 - Transmission Access Panel

1.4. Close the two auxiliairy heating circuit valves.

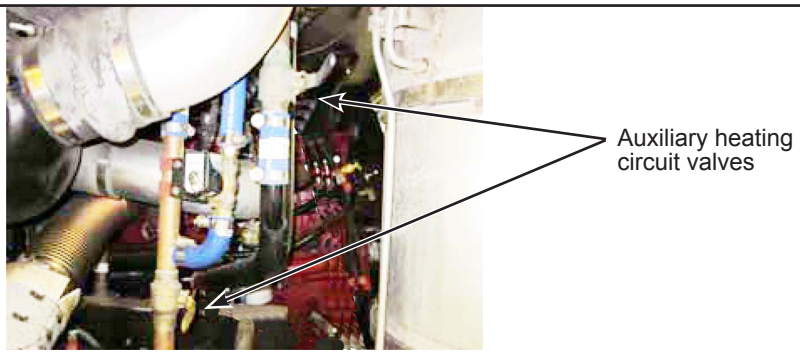

Figure 2 - Engine Compartment Auxiliary Heating Circuit Valves

1.5. Drain the coolant circuit. See section 09: **ENGINE COOLANT** for more information on draining.

1.6. Remove the rigid transmission coolant hoses. Retain the hardware. See Figure 3. This step is required to access the engine mounts.

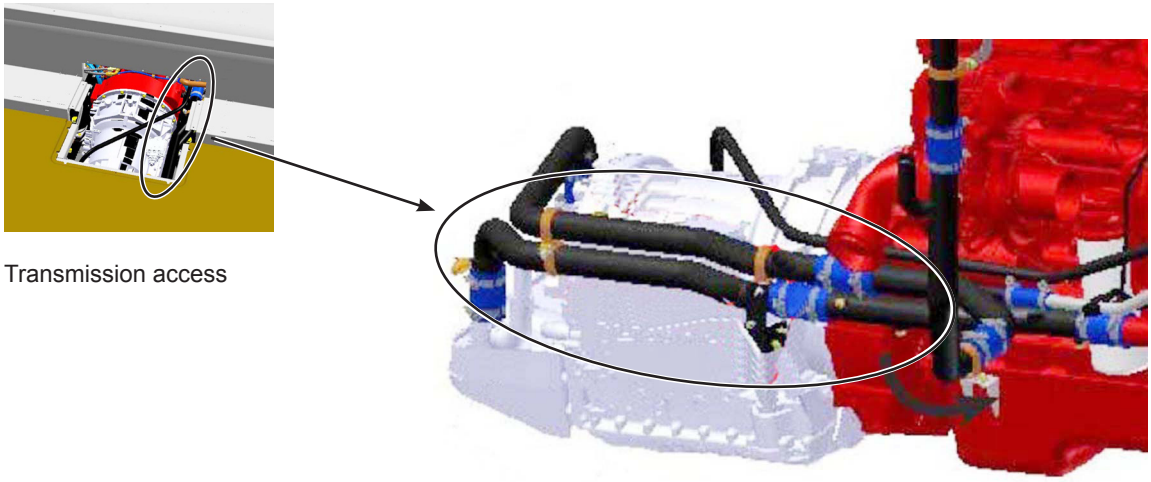

Figure 3 - Transmission Coolant Rigid Hoses

1.7. Support the transmission from underneath using a typical stand fixture . See Figure 4.

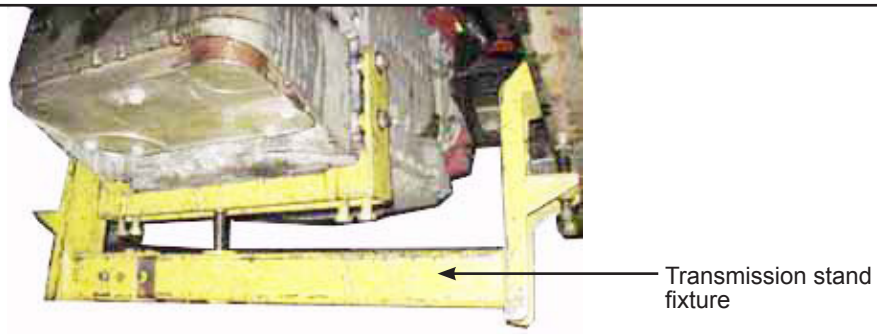

Figure 4 - Typical Transmission Support

1.8. Remove the P-clamps and move the electrical harness aside. See Figure 5. This step is required to access the engine mounts.

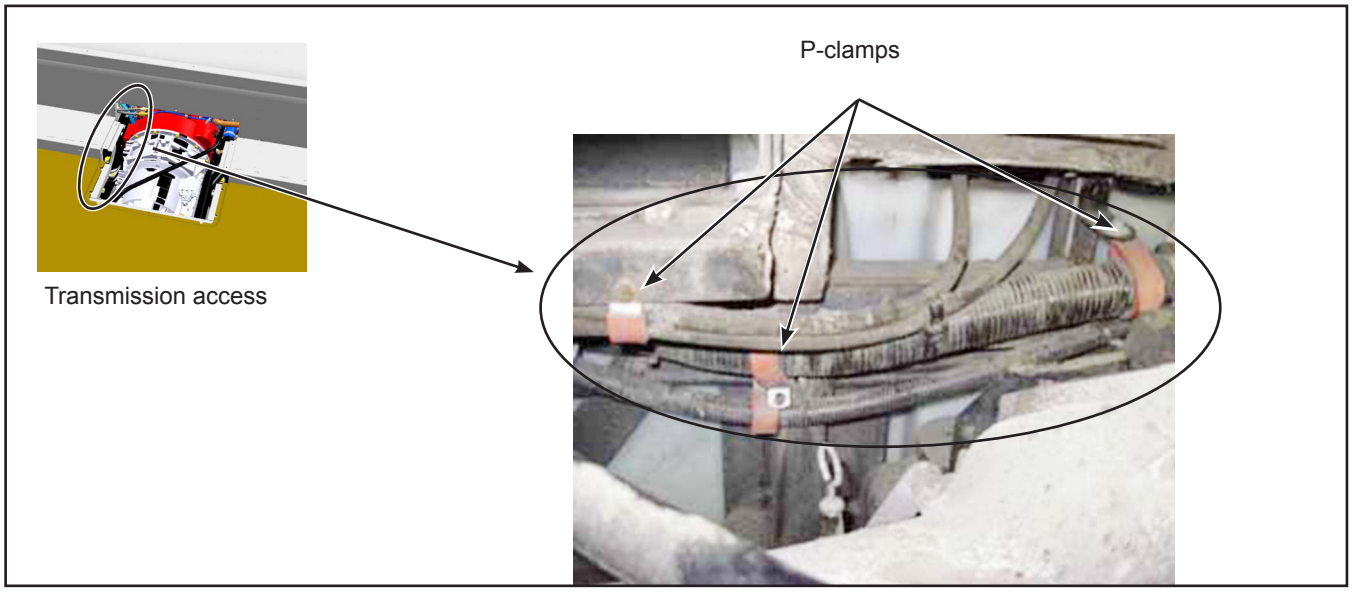

Figure 5 - Electrical Harness

ENGINE MOUNTS ON THE TRANSMISSION SIDE

NOTE

The following steps must be applied to both sides of the vehicle

1.9. Remove the M24X160 bolts and nuts. See Figure 6. Retain the hardware.

1.10. Remove and dispose of the four M16X45 bolts and lock washers of the engine support. See Figure 6.

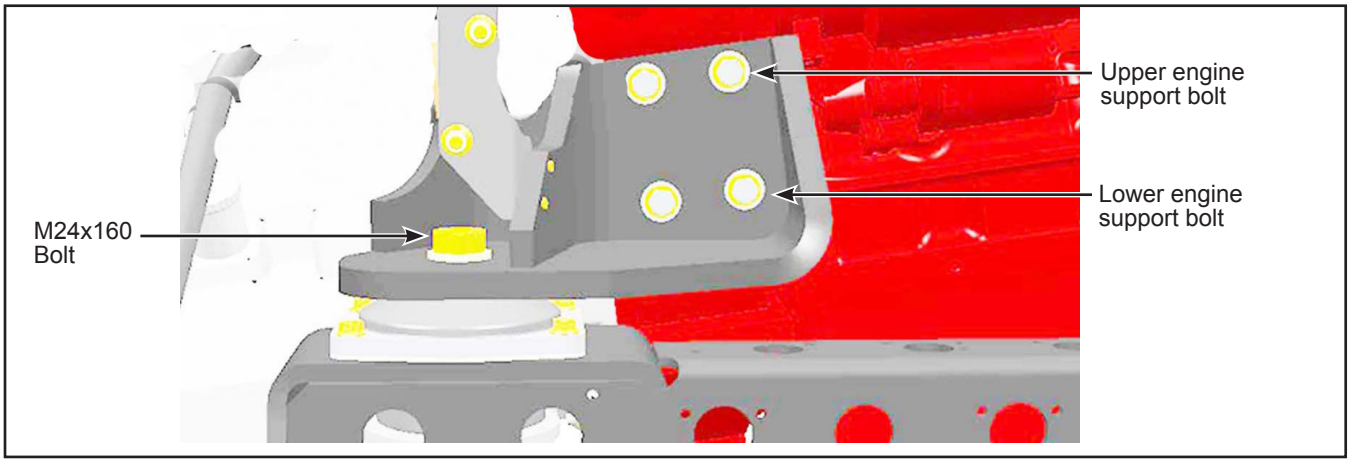

Figure 6 - Engine Support Bolts

1.11. Remove and dispose of the four M10X45 bolts on each rubber mount.

1.12. Install an N69398 shim between the cradle and the rubber mount.

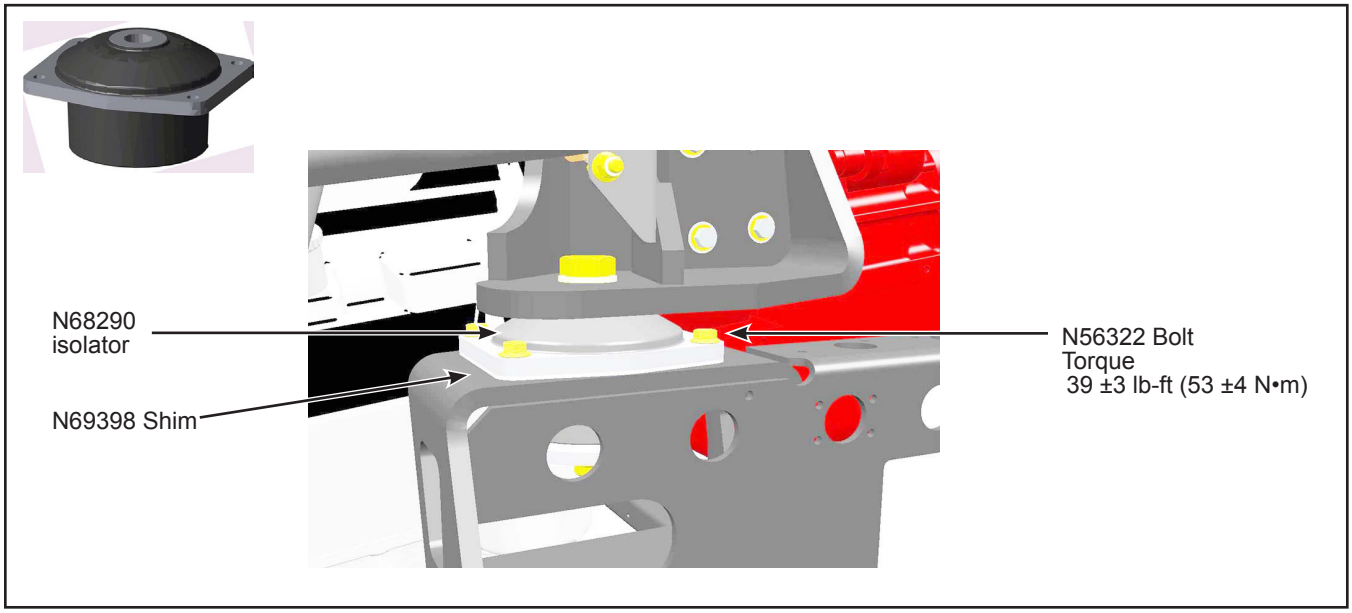

Figure 7 - Isolator Installation

1.13. Install the new rubber isolator N68290 in it location.

1.14. Affix the new rubber isolator with four N56322 bolts. Tighten to the torque specified in Figure 7.

Figure 8 - Flywheel Casing's Threaded Holes

1.15. Clean the four flywheel casing's threaded holes with a M16 tap. See Figure 8.

1.16. Spray the mounting holes with brake cleaner. Using a small brush, thoroughly clean inside the holes to remove all traces of grease, lubricant and dirt.

1.17. Use dry compressed air to blow off the cleaner and other particles.

1.18. Repeat the two previous steps before continuing.

1.19. Spray the threaded portion of N45429 bolts with brake cleaner.

1.20. Use dry compressed air to blow off the cleaner and other particles.

1.21. Affix the engine mount to the transmission fly wheel casing with four new N45429 bolts and N31667 lockwashers, Tighten to the torque indicated in Figure 9 . Do **NOT** use any thead-locker.

NOTE

Installation of upper mounting bolts is performed from the inside of the vehicle.

Installation of lower mounting bolts is performed from underneath the vehicle. See Figure 9.

1.22. Install the retained M24X160 bolt and nut. Tighten to the torque indicated in Figure 9.

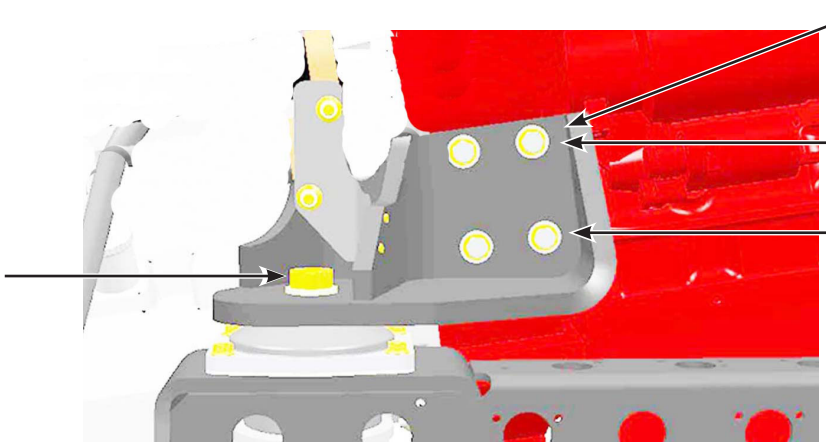

Figure 9 - Affixing Engine Support

1.23. Install the rigid transmission coolant hoses with the retained hardware.
1.24. Install the electrical harness with the retained hardware.
1.25. Close the two auxiliary heating valves.
1.26. Install the transmission access panel with retained hardware.
1.27. Fill the coolant system.
1.28. Remove all safety stands and transmission supports from beneath the vehicle.
1.29. Lower the vehicle.

ENGINE MOUNTS ON THE BUMPER SIDE

NOTE

The following steps must be applied to both sides of the vehicle

1.30. Remove the two bolts that retain the rubber isolators to the cradle. Retain the hardware. See Figure 10.

1.31. Lift the rear part of the engine approximately 2.5 in. (64 mm). It is suggested to support the engine on the rear oil pan bolt heads.

1.32. Remove the two rubber isolators from the cradle. See Figure 10.

1.33. If Shims are installed between the top part of the rubber isolator and the upper side of the cradle, dispose of this shim.

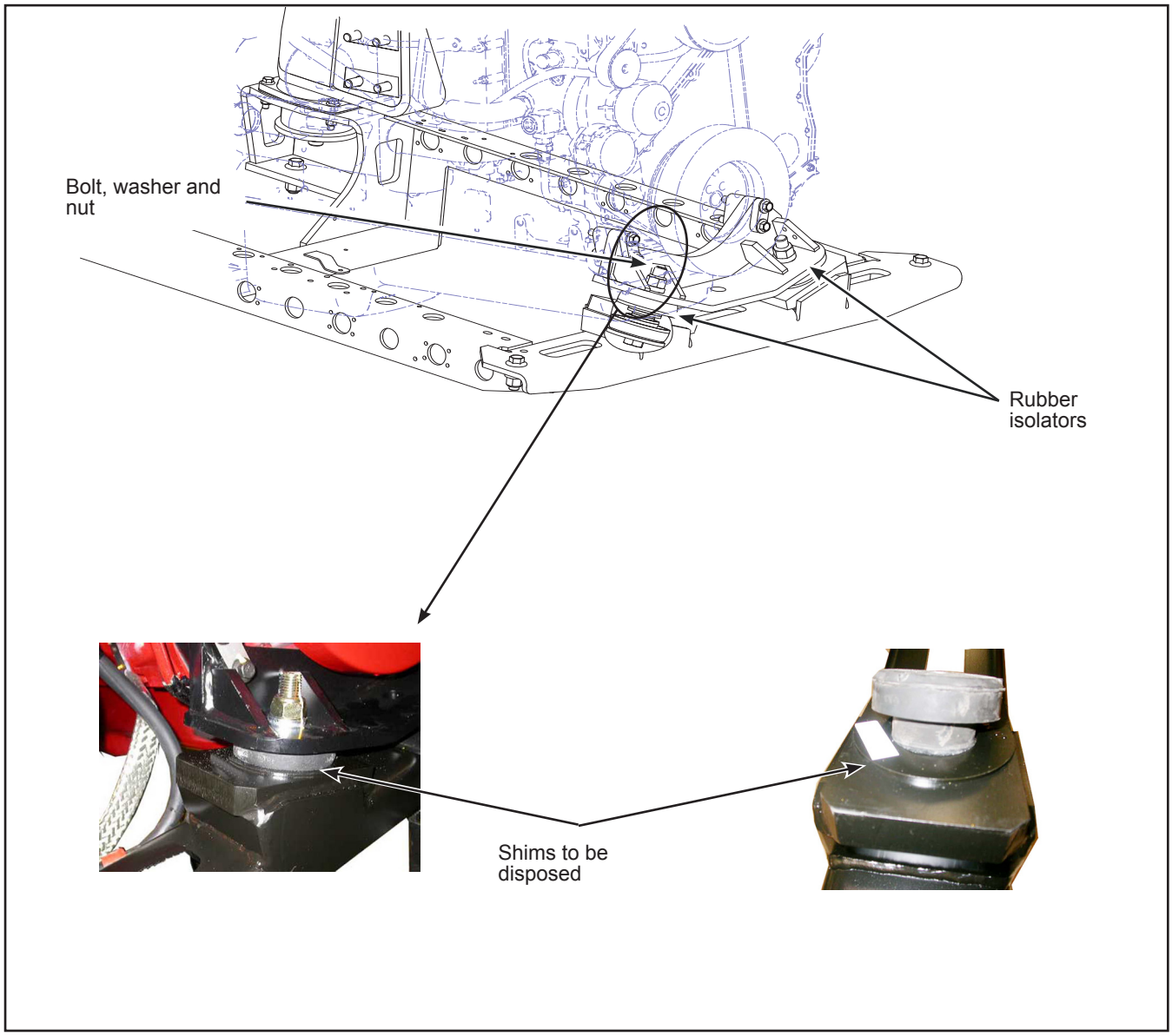

Figure 10 - Location of Rubber isolators

1.34. Install the two new N66492 rubber isolators.

1.35. Lower the engine to rest on the cradle

1.36. Affix the rubber isolators with the retained hardware. Tighten to the torque specified in Figure 11.

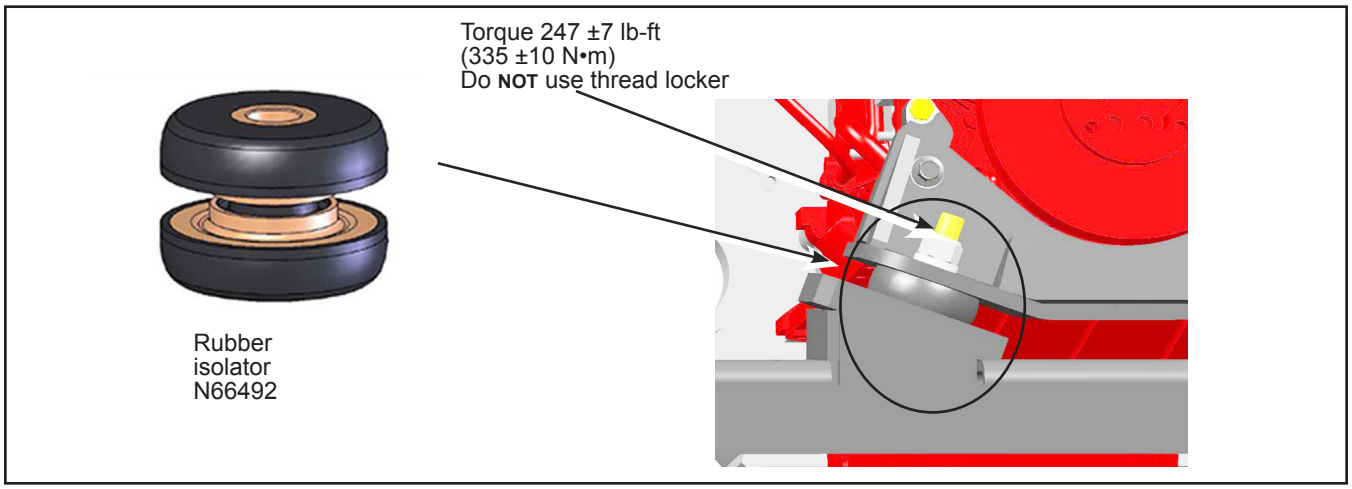

Figure 11 - Rubber Isolator Installation

1.37. Lower the vehicle.

1.38. Install the rear bumper with the retained hardware and tighten to the torque specified in Figure 12.❖

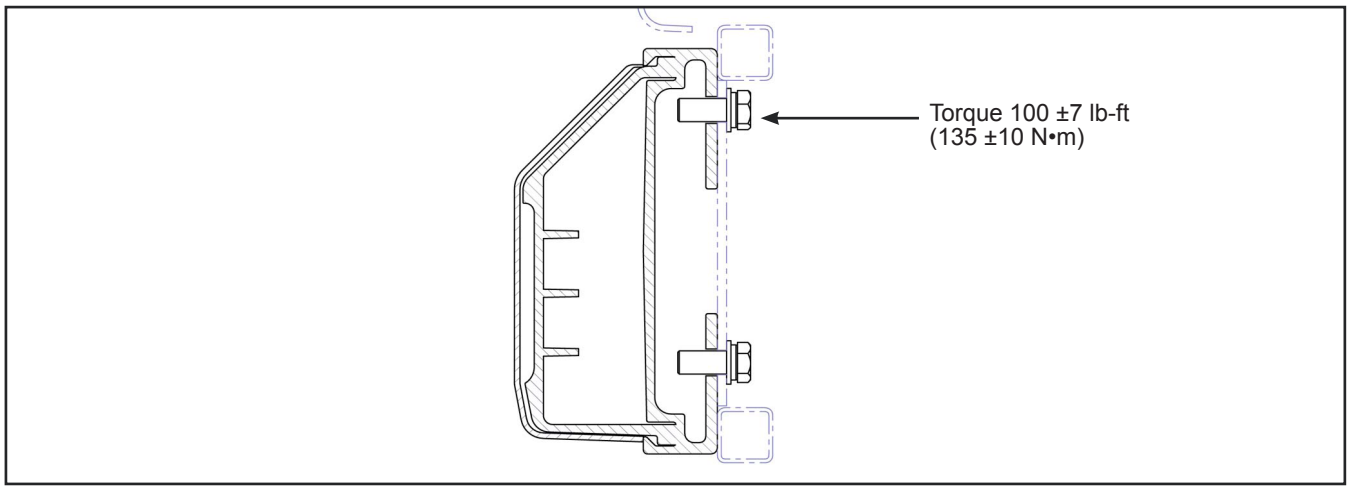

Figure 12 - Rear Bumper Torque