FSB 271-002, Accelerator Pedal

(December 2013)

On some Volvo models built between January 1, 2013 and September 13, 2013, may experience multiple counts of inactive faults:
P113F-12, Buffered Idle Validation Switch Wire – VECU Side, Circuit short to Battery.
P113F-11, Buffered Idle Validation Switch Wire – VECU Side, Circuit short to Ground.
This is due to a bug in the software. If this issue is found follow the procedure below:

Parts

Accelerator Pedal Replacement Parts		
Description	**Existing Part**	**New Part**
Accelerator Pedal (Volvo Standard)	82627957	82734053
Accelerator Pedal (Volvo Kickdown)	82627979	82734049
Jumper Harness	N/A	22059325
Conversion Kit	N/A	85137025

Note: You will only have one or the other, a Standard Pedal or the Kickdown Pedal.

Note: Jumper harness will be required on all vehicles.

Note: If the truck is equipped with an I-shift transmission then conversion kit will be needed.

Repair Procedure

Note: Information is subject to change without notice.
Illustrations are used for reference only, and may differ slightly from the actual engine version. However, key components addressed in this information are represented as accurately as possible.

You must read and understand the precautions and guidelines in Service Information, group 30, "General Safety Practices, Electrical and Electronics" before performing this procedure. If you are not properly trained and certified in this procedure, ask your supervisor for training before you perform it.

1 Secure the vehicle for service by parking it on a flat level surface, applying the parking brake, chocking the rear wheel, and placing the transmission in neutral.

2 Disconnect all cables from the negative battery terminals to prevent personal injury from electrical shock and prevent damage to electrical components.

3 Roll floor mat back on right side.

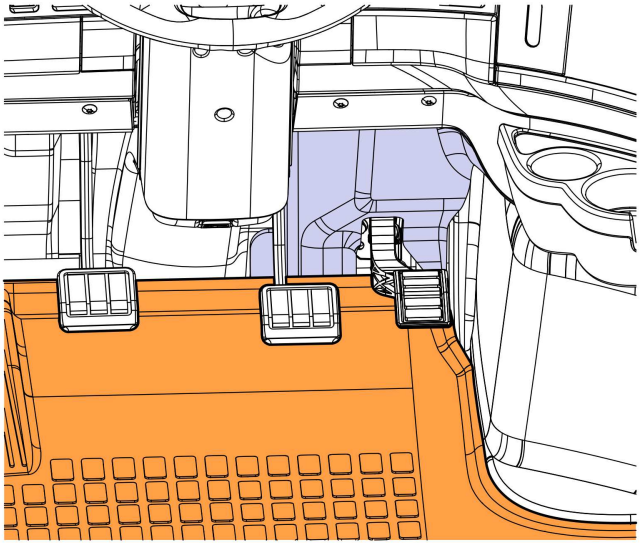

W2083009

4 Remove lower right panel nut.

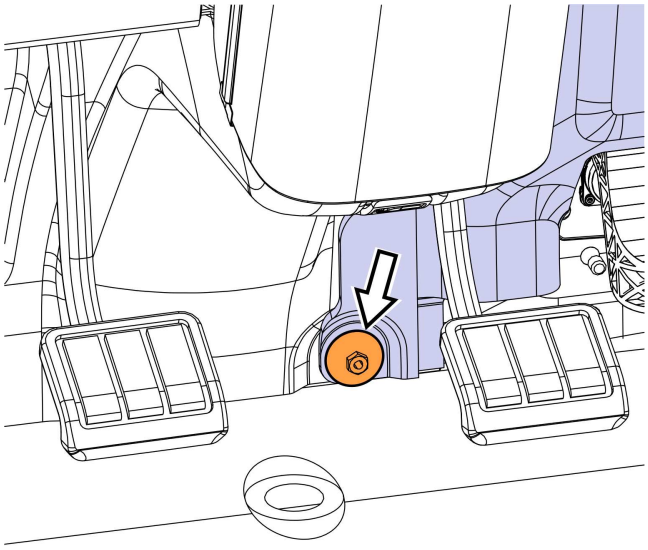

W2083010

5 Remove the upper fasteners from both lower right dash panels and remove the panels.

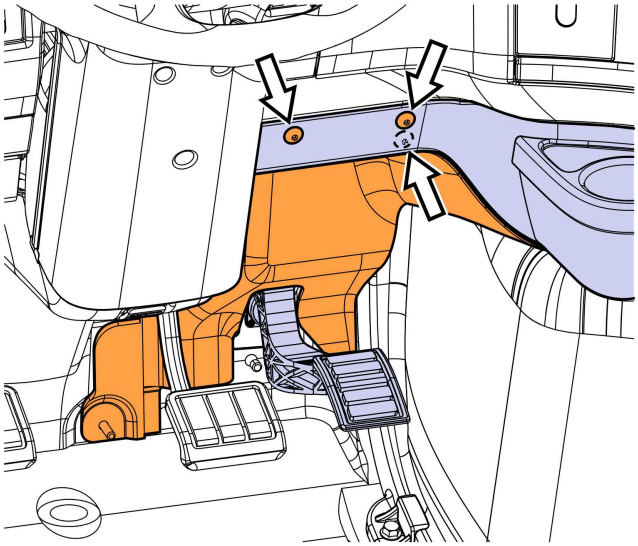

W2083011

6 Disconnect the throttle position sensor harness and cut plastic cable tie from support bracket.

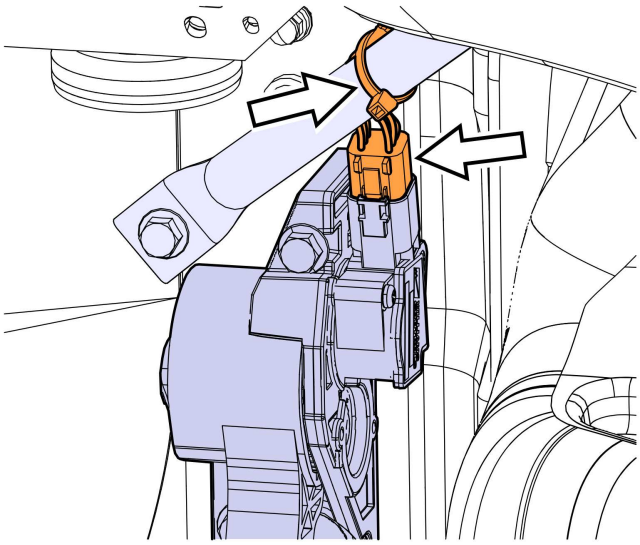

W2083012

7 Remove fasteners and remove accelerator pedal assembly.

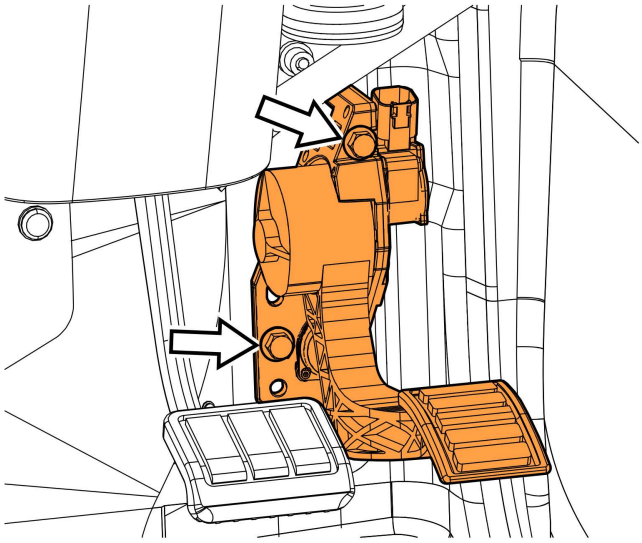

W2083013

8 Install replacement accelerator pedal and tighten fasteners to 24 ± 4 Nm (18 ± 3 ft-lb).

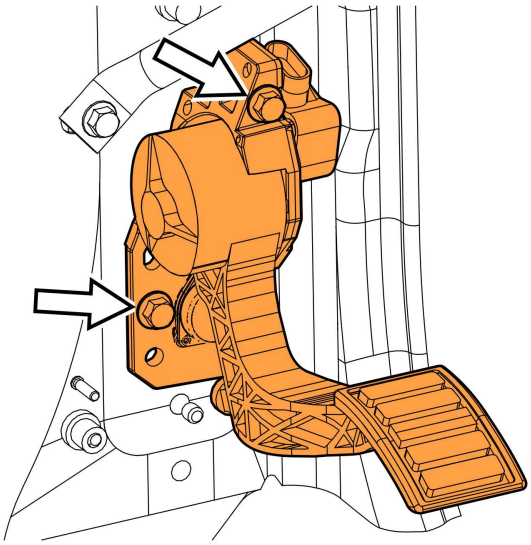

W2083014

9 Connect the jumper harness connector (1) to the throttle position sensor (2) and to the cab harness (3).

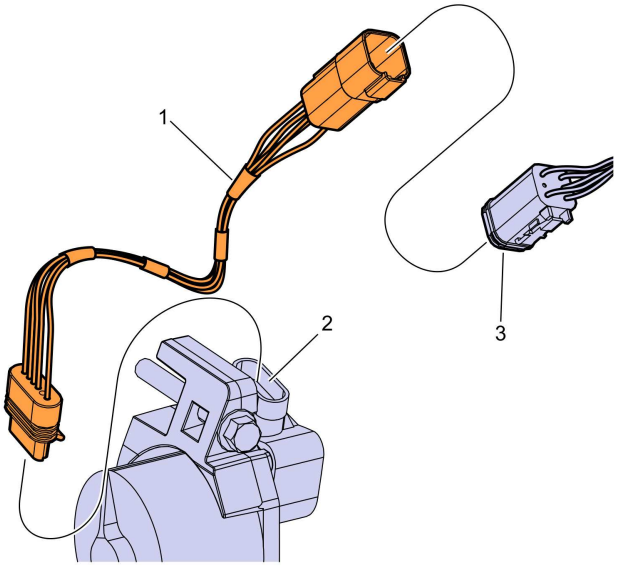

W2083015

10 Secure harness with cable tie as shown.

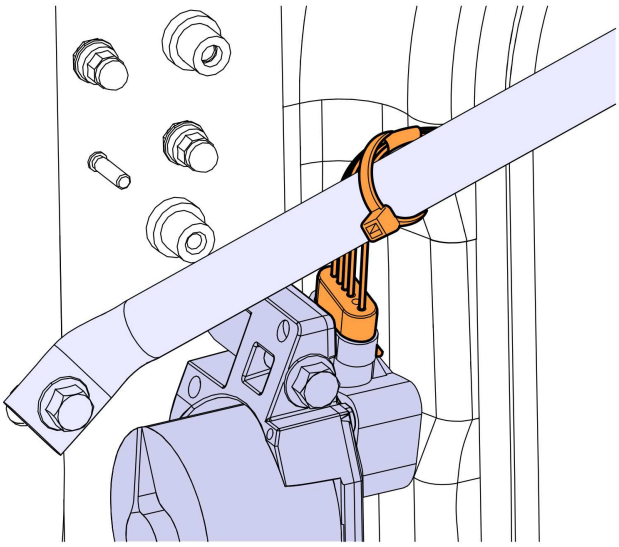

W2083016

11 Position right panel, and ensure Heating, Ventilation, & Air Conditioning (HVAC) pipe is secured in panel.

12 Install the upper fasteners in the lower right dash panel and center under dash panel

Note: Do not torque trim panel fasteners. Hand tighten only.

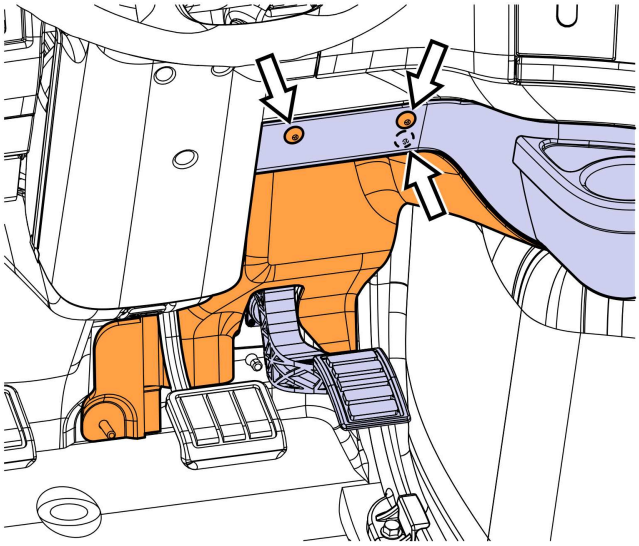

W2083011

13 Install lower right dash panel fasteners.

Note: Do not torque trim panel fasteners. Hand tighten only.

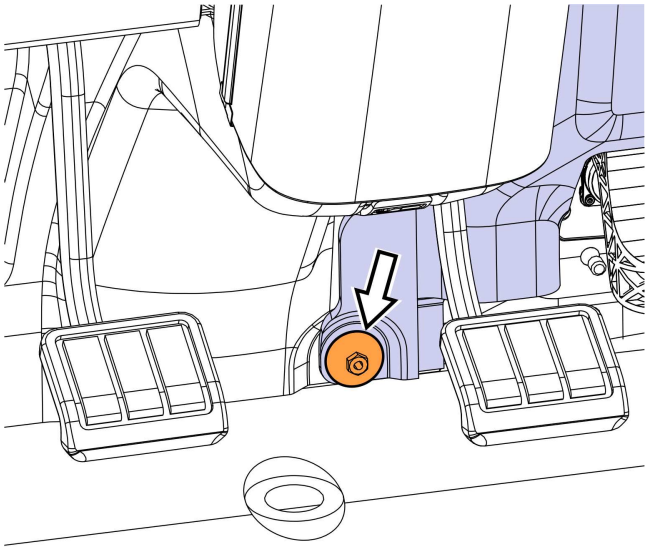

W2083010

14 Roll floor mat back in place.

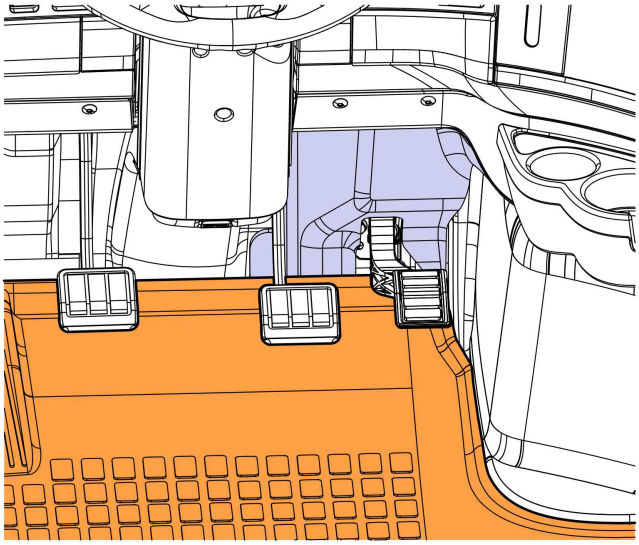

W2083009

15 Reconnect all previously removed cable to the negative (ground) battery terminals.

16 **For I-Shift only**, begin installation of conversion kit part number 85137025.

17 **For I-Shift only**, reprogram the Vehicle Electronic Control Unit (VECU), (MID 144).

18 Clear all Diagnostic Trouble Codes (DTC's).

19 Verify proper operation.

20 Remove wheel chocks.

Reimbursement

This repair may be eligible for reimbursement if a product failure was experienced within time and mileage limits of the applicable Warranty coverage. Reimbursement is obtained via the normal claim handling process.	
Claim Type (used only when uploading from the Dealer Bus. Sys.)	W
Labor Code	
Primary Labor Code (Without I-Shift Transmission)	27101-0-01 0.3 hrs.
Primary Labor Code (With I-Shift Transmission)	27101-0-02 0.8 hrs.
Causal Part	82627957 & 82627979

Volvo Trucks North America engages in a comprehensive program of testing and evaluating to provide the best possible product. Volvo Trucks North America however, is not committed to, or liable for updating existing vehicles.