KIA TECH TIMES

The Professional Publication for Kia Dealership Technicians & Service Staff

2013 Volume 16, Issue 3

Inside this Issue:

Page		Page	
1	**Identifying Wind Noise**	8	**TechTimes Crossword Puzzle**
2	**Tech Line Tech Tips / Latest TSBs**	9	**Charging and Testing Batteries**
3	**Becoming Elite Certified**	11	**Bias Voltage**
4	**Pressure Sensors**	12	**Crossword Puzzle Solution**
6	**Technology & Features of the New Kia Sorento**		

Identifying Wind Noise

One of the more challenging customer's concerns are wind noises. By understanding each type of noise, will greatly aid in the repair of the concern. To assist you, coming in October of 2013 we will be introducing a Wind Noise and Water Leak web course. We will be show case how to identify and locate whistle, hiss, roar, and rush as well as water leaks.

Wind noises are classified in one of four categories:

- Whistle
- Hiss
- Roar
- Rush

A **whistle** is a high pitch wind noise similar to the sound when a teapot starts to boil. The air which is escaping from the inside of the vehicle to the outside creates a whistling sound. As the vehicle speed increases so does the intensity of the whistle.

A **hiss** is a sound similar to a vacuum leak in an engine. As with a whistle, the inside air is escaping out but through a larger opening. The size of the leak will affect the noise sound intensity, the larger the opening the lower the pitch.

A **roar** is a low pitch rumbling sound that is not constant and depends on air flow turbulence passing over parts or through a large opening.

A **rush** is described as rushing or howling sound. This type of noise is caused by loose trim or other outside accessories that air travels around, such as add-on roof racks or body kits. This type of noise is almost always externally caused.

Coming next Tech Times, water leaks ……..



By taping off sections at a time, this aids in narrowing down the area of the suspected noise.

Tech Line Tech Tips

Vehicle	Concern	Recommendation Before Calling Techline
Sportage (SL)	Key stuck in ignition	Check the park micro-switch located on the left-hand side of the shifter. Inspect the switch lever to see if it is bent. If the switch lever is bent then carefully straighten it so it is at a 45 degree angle with the body of the switch. This is the switch that sends the ***"Park"*** input to the BCM.
Optima (QF/ TF)	Vehicle towed in, presenting a 'no start/no crank' concern	After checking all of the inputs needed to start the engine, check the starter solenoid snap-in connector for possible pin tension/damage concern. Check that the connector is firmly installed into the starter solenoid. This may correct the concern.
All models	Do I need to open a Tech Line case for installing a SOP part?	No. A techline case is not required when installing SOP parts.
Cadenza	Dead battery--How do I enter the vehicle? There is no door key cylinder.	The key cylinder is located underneath a cover on the driver's door. To remove the cover, use the ignition key to depress the release button on the bottom of the cover, then insert the key as normal to unlock the door. Reference Pitstop PS272 for more information.

Latest Technical Service Bulletins, Service Actions and Campaigns

CHA 040	Rear Lower Control Arm Replacement Procedure
ENG 130	ECM Upgrade - - Reflash and EWGA Adjustment Procedure
ELE 052	Replacement Battery - Service Information
CLI 021	Service Action: Manual HVAC Control Unit Logic Improvement
BOD 096	Service Action: Horn Assembly Inspection and Upgrade Procedure
ENG 132	ECM Upgrade - - Driving Performance Improvement (Ver. 2)
CLI 020	Passenger Floor Wet During A/C Operation
BOD 098	Optima Right-hand Fender Split Repair Procedure

⚠ CAUTION

VEHICLE SERVICING PERFORMED BY UNTRAINED PERSONS COULD RESULT IN DAMAGE TO THE VEHICLE.

⚠ WARNING

- **Vehicle servicing performed by untrained persons could result in injury to those persons or to others.**
- **The Kia technician newsletter (Tech Times) is intended for use by professional Kia automotive technicians only. It is written to inform technicians of conditions that may occur on some vehicles. Trained Kia technicians have the equipment, tools, safety instructions, publications and expertise to perform the job correctly and safely.**

✱NOTICE

The topics covered in this newsletter are designed to assist you with the diagnosis and repair of specific vehicle conditions. Just because a condition is described in this newsletter, do not assume that it applies to your vehicle, or that your vehicle will have that condition. In all cases, the procedures in the applicable Service Manual and/or Electrical Trouble-shooting Manual or on KGIS should be performed first.

Copyright © 2013 Kia Motors America, Inc. All rights reserved. No part of this publication may be reproduced, stored electronically, or transmitted in any form or by any means without prior written approval from Kia Motors America, Inc. ("KMA"). KMA reserves the right to make changes in the descriptions, specifications, or procedures.

© Kia Motors America, Inc.

Published by Kia Motors America, Inc. and produced by Kia University.
All rights reserved.

Director, Kia University
David Wobst

Tech Times Editor
Lewis Thompson

Production Coordinator
Lewis Thompson

Tech Times Contributors
Barry Nelson
Brian Lockhart
Joe Alt
Tom Buckingham
Neil Moen
Tony Cartagena

Technical Editors
Neem Van der Reest
Lewis Thompson

Engineering Support & Technical Writer
Neem Van Der Reest

Technical Writer
Mario Garcia

Becoming Elite Certified

2013 year-end is swiftly approaching. Are you on track to attain your certification? Becoming **Elite Certified** will qualify you for valuable recognition rewards. In addition, attaining that certification is a pre-requisite for the other Kia Elite programs. Please refer to the Kia Elite Program Guides available on **www.myKiaPerformanceCenter.com**.

Qualifying for the **Elite Certified** program requires that students are at least trained at the Professional level at the program conclusion. The **Professional Certification** requirements are composed of web-designed courses available on **KiaUniversity.com** 24/7.

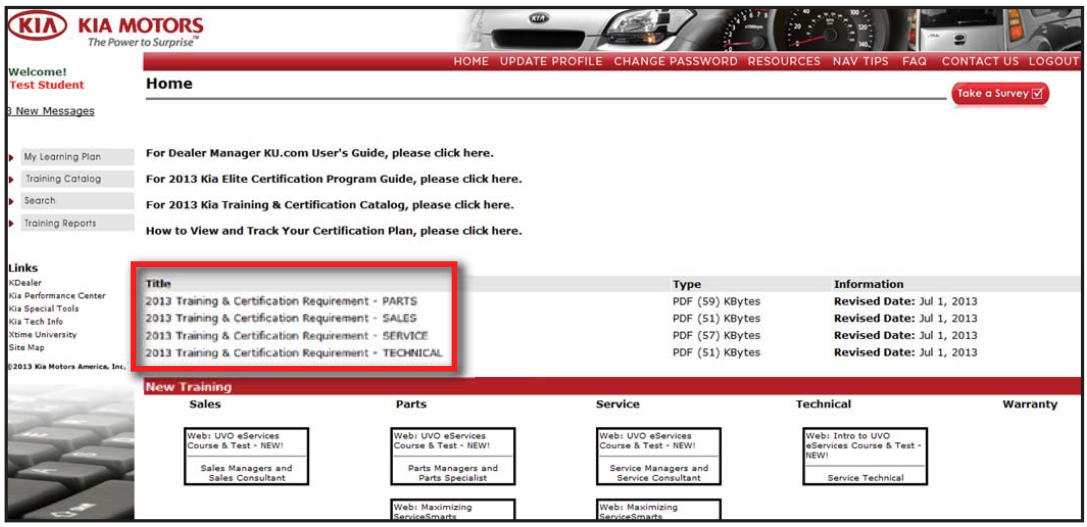

Your personal certification training through Kia University will assist you with fixing your customers' Kia vehicles right the first time. Not only can you impact their loyalty to Kia, but you can also earn their future service business at your dealership.

Cadenza Certification

If you have earned **Elite Certification *Plus*** (ASE Certified) in 2012, you have the opportunity to earn **Cadenza Certification Elite**. This achievement recognizes your standing as a leader in Kia technical knowledge as we shift the Kia brand into the new and exciting premium sedan market.



Cadenza Certified technicians earn a set of Cadenza Certification patches to display on their Kia uniforms.

To become Cadenza Certified you must have earned Certification Elite *Plus* (ASE Certified) as a technician last year. In addition, you must complete the following Cadenza curriculum:

TEC-01-042-1: WEB: 2014 Cadenza Technical Highlights Course & Test – New!

TEC-03-044-1: ILC: 2014 Cadenza Systems Diagnosis Course

The Cadenza offering competes in a vehicle sales class where customers have higher expectations for their ownership experience. It is more important than ever for us to keep Kia customers at the center of all our endeavors and make them our number-one priority.

Pressure Sensors

In our continuing series of input sensors, another Voltage Divider Circuit is the Pressure Sensor, also referred to as a Pressure Transducer.

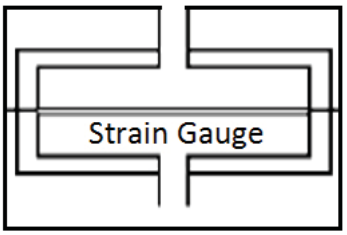

The sensor consists of a piezoelectric element (strain gauge) diaphragm that creates a pressure sensitive variable resistor effect allowing the semiconductor to output an analog signal proportional to the change in pressure.

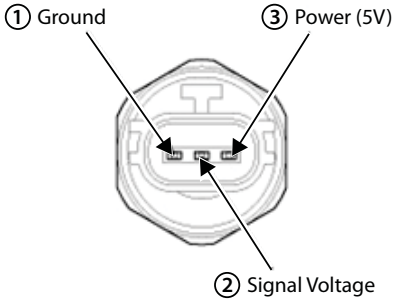

When a reference voltage Vref is applied to one leg and ground to the other leg of the transducer the voltage at the sensor output referenced to ground is based upon the relationship between the diaphragm position and the reference chamber.

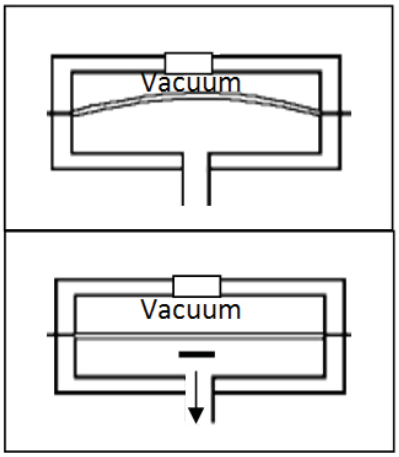

Absolute Pressure Sensor

Two types of pressure sensors are used:

The **Absolute Pressure Sensor** measures pressure less than barometric pressure.

- Reference chamber sealed in a vacuum
- Strain gauge pulled towards the sealed chamber when no vacuum is applied to the sample port
- Strain gauge pulled towards the sample port when a lower pressure is applied to the sample port
- Strain gauge moves and changes its internal resistance, which changes the signal voltage proportional to the movement of the strain gauge

These include:

- Manifold Absolute Pressure (MAP)
- Barometric Pressure (BARO)

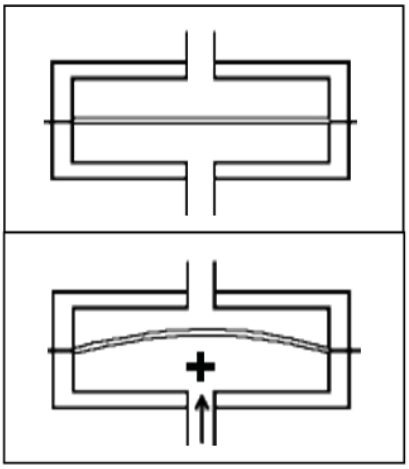

Gauge Pressure Sensor

The **Gauge Pressure Sensor** measures pressures greater than or less than barometric pressure.

- Reference chamber that is open to atmosphere
- Strain gauge remains in the center when no pressure or vacuum is applied to the sample port
- When pressure is applied, the strain gauge moves towards the lower pressure side of the sensor and outputs a voltage proportional to the movement of the strain gauge.
- When vacuum is applied, the strain gauge moves towards the lower pressure side of the sensor and outputs a voltage proportional to the movement of the strain gauge

These include:

- Fuel Tank Pressure (FTP)
- A/C Pressure Sensor (APT)
- Clutch Pressure Sensor (CPS)
- Rail Pressure Sensor (RPS)

Continued on next page

Pressure Sensors *(Continued)*

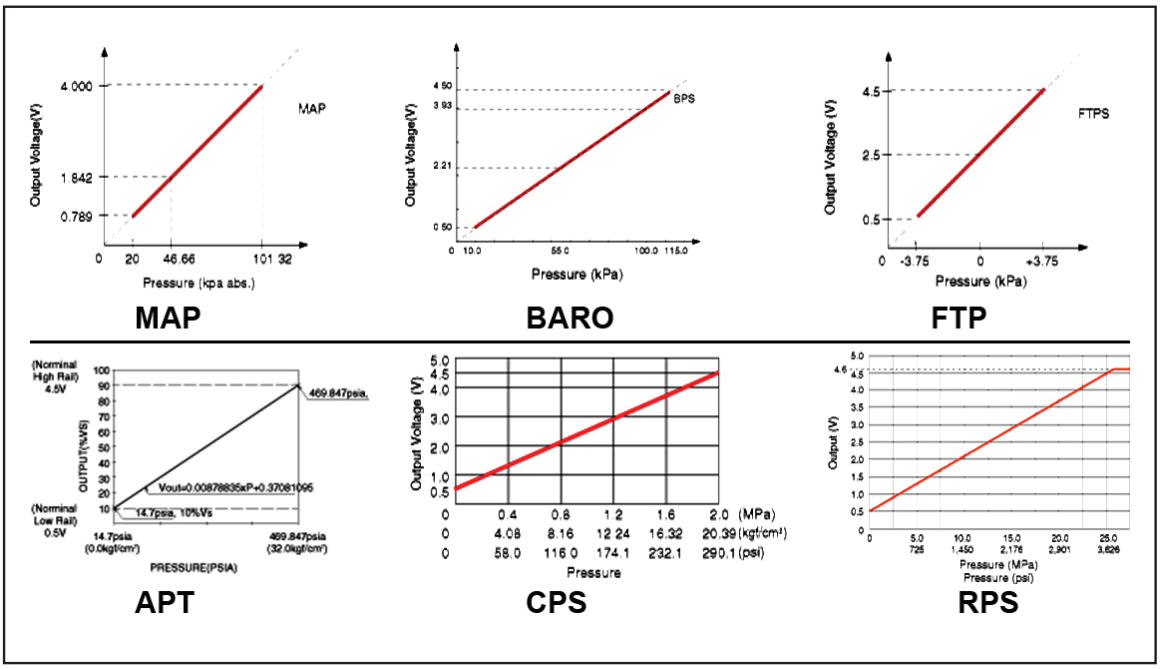

These charts show approximate voltage readings for absolute and gauge pressure sensors.

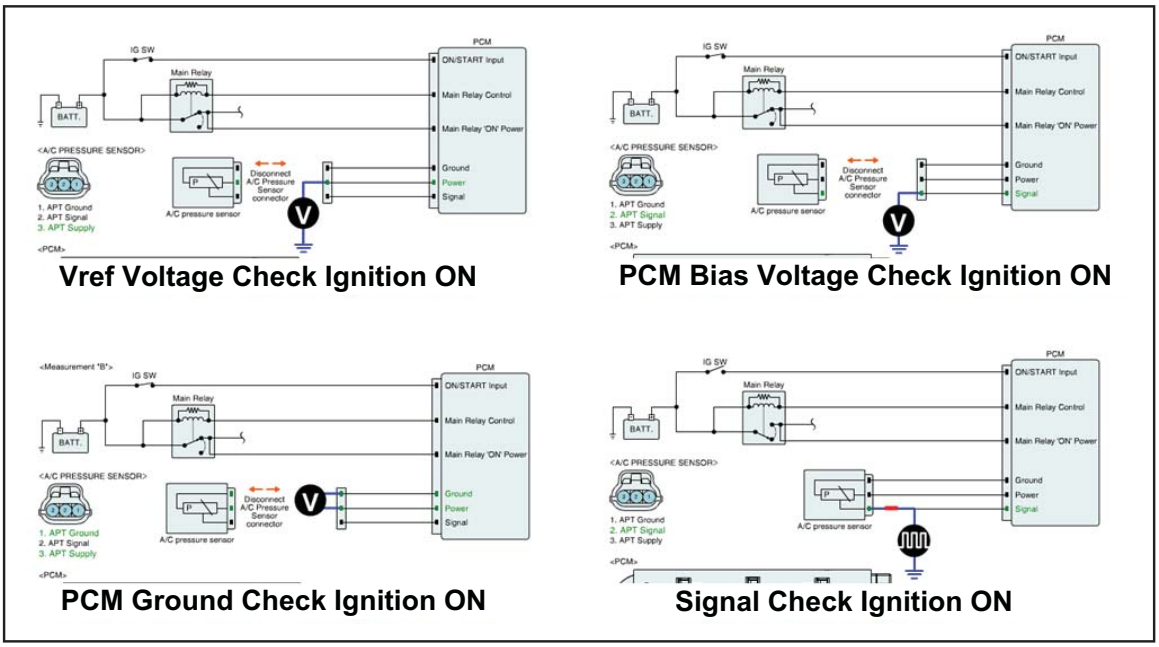

This example illustrates voltage and signal checks that can be performed using service information.

In our next issue, we will discuss the (piezoelectric) Knock Sensor Circuit.

Technology and Feature Highlights of the New Kia Sorento



The **2014MY Kia Sorento** hosts a number of standard and optional features & technologies new to the Kia vehicle line-up. Some of these, such as the power tailgate feature, Blind Spot Monitoring System and Lane change Assist, were introduced in our last issue of TechTimes. All of these new features are outlined in this article for dealership service personnel to become more familiar with their functionality in order to help maximize owner satisfaction with those features.

Illuminated Door Handles *(if equipped)*



As an available option on some Sorento vehicles, the driver's side door handle is automatically illuminated when the vehicle is unlocked with the smart key fob.

Panoramic Sunroof *(if equipped)*

For vehicles equipped with a panoramic sunroof, separate controls are provided for operating the sunroof & sunshade:

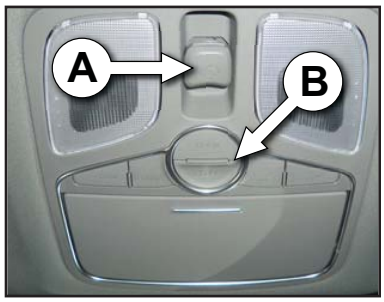

A. Sunroof Control
B. Sunshade Control

Sunroof Re-initialization Procedure

In the event that the battery is discharged or disconnected (prior to being serviced, for example), the sunroof will require re-initialization after the battery is charged or reconnected. Use the following procedure:

1. Turn the ignition to the ON position.
2. Ensure that the sunshade and sunroof are completely closed.
3. Push the Sunroof Control Lever forward in the CLOSE direction, and hold for about ten seconds until the sunroof moves a little and make clicking sounds, then release.
4. Press the lever again in the CLOSE direction and HOLD until the sunroof and sunshade completely opens and closes. (About 20 seconds) The re-initialization procedure is complete.

LED Positioning Lights

LED "eyebrow style" positioning lights are standard on all trim levels of the new Sorento. Positioning lamps only illuminate while the parking lights or headlights are activated.

Fuse Box ON/OFF Switch

Sorento vehicles are now equipped with a Fuse Box ON/OFF Switch to prevent battery draw while the vehicle is in long-term storage. This switch is located on the face of the instrument panel fuse box. Note: Set the switch to the OFF position when long-term storage of the vehicle is required.



Power Tail Gate *(if equipped)*

The power tail gate can only be operated while

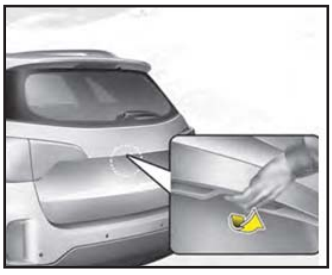



the vehicle is in Park mode and the doors are unlocked. This system can be programmed to stop

Continued on next page

at a specified height to allow for easy access to the power tail gate close button.

Power Tail Gate Re-initialization

Re-initialization of the tailgate may become necessary after certain events, such as when the battery has been discharged, or if the related fuse has been removed or replaced. Reinitialize the power tailgate by following this procedure:

1. Press and hold both the inner and outer Tail Gate Buttons for 5 seconds, until the system issues an audible beep
2. Manually close the tailgate
3. Press the outer Tail Gate Button
4. Wait for the tailgate to open fully
5. While the tailgate opens, the system will beep six times and the rear combination lamps will blink twice to confirm successful re-initilization

Power Tail Gate Opening Height Adjustment

Follow these steps to set the opening height for the power tailgate:

1. Manually position the tailgate to the desired height
2. Press the Tail Gate Close button for more than 3 seconds
3. You will hear the system beep twice indicating height has been set up

Blind Spot Monitoring System *(if equipped)*

The Blind Spot Detection (BSD) system is designed to inform the driver when another vehicle is in his/her blind spot. The system uses two sensors, one in each rear corner of the vehicle. When a vehicle is in the blind spot, a BSD Indicator will illuminate in the outside mirror. When the turn signal is activated while a vehicle is detected in the blind spot, an audible tone will also sound.

Vehicles equipped with BSD are shipped with the system in the OFF position.



To activate, depress the switch, as shown. The System is ON when the indicator light is illuminated.

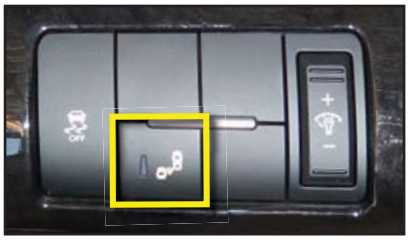

The Blind Spot Monitoring System will operate while the vehicle maintains a speed above 18.6 MPH. Sensors are located inside the rear bumper cover, so it's important to ensure that the surface of the bumper cover is free of damage and clear of any heavy debris (such as mud) at all times. The BSD may not operate when the vehicle is pulling a trailer or other cargo hauling device.

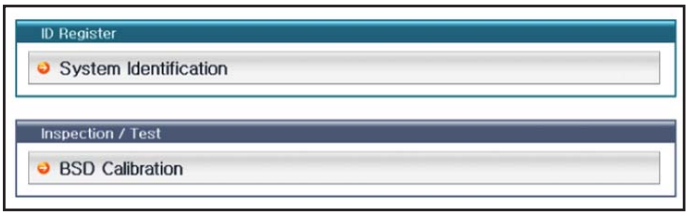

In the event the BSD module/sensors require replacement, use GDS to perform the required BSD Calibration procedure.

Lane Change Assist

The Lane Change Assist (LCA) is a feature of the BSD system and is designed to detect vehicles approaching the vehicles blind spots at a higher rate of speed. If a vehicle is detected and the corresponding Turn Signal is activated, an audible tone will sound and the BSD indicator on the corresponding rear view mirror will flash. Please also see the article on BSD in TechTimes Volume 16, Issue 1.

FlexSteer *(if equipped)*

The optional FlexSteer feature allows drivers to control the effort and feel of the vehicle's steering. The driver can cycle between three modes – Standard, Comfort and Sport by depressing the switch on the steering wheel.

Continued on page 9

TechTimes Crossword Puzzle

Test your knowledge of the articles in this issue of TechTimes by completing this crossword puzzle. The solution to this month's puzzle can be found on page 12.

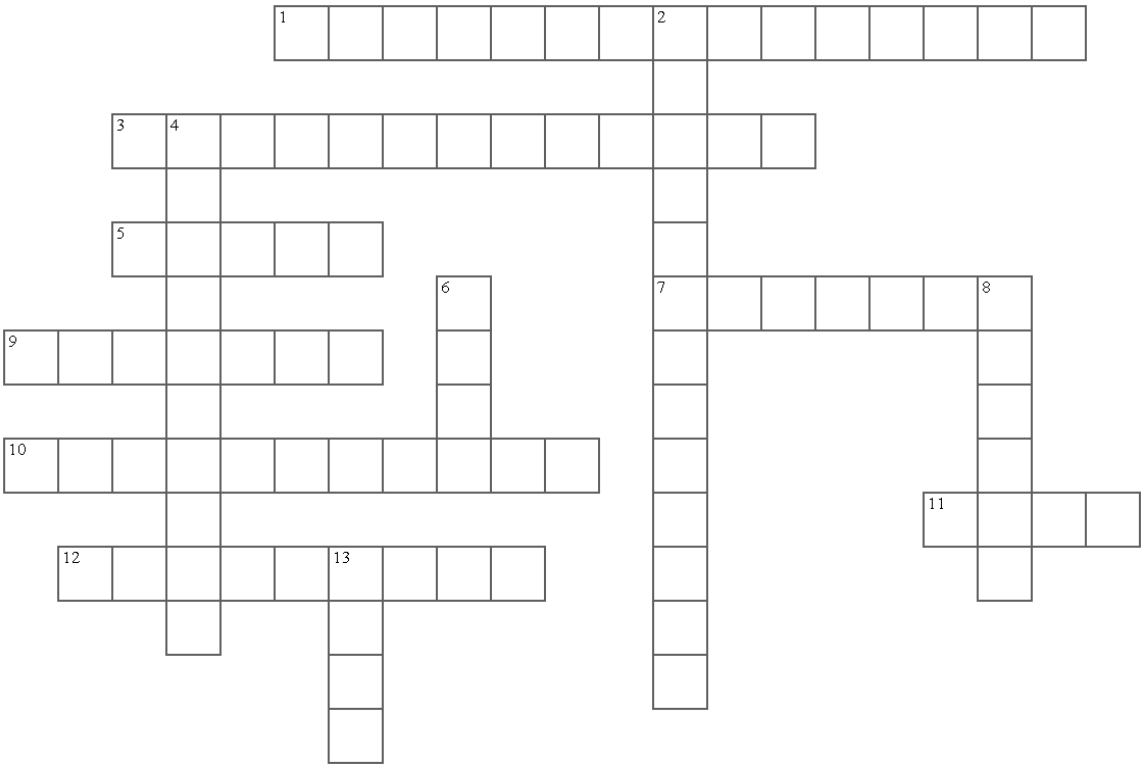

Across

1. A _____ _____ test should be performed to determine how much energy remains in a battery. (two words)
3. On some new Kia Sorento vehicles, User Settings can be accessed via the _____ _____ controls. (two words)
5. The _____ Pressure Sensor measures pressures greater than or less than barometric pressure.
7. If a technician earned Elite Certification Plus in 2012, they are now eligiable to earn _____ Elite Certification.
9. The four categories of wind noise are _____, hiss, roar, and rush.
10. The new Kia Sorento includes optionally equipped _____ door handles.
11. A _____ wind noise is a low-pitched rumbling sound that is not constant.
12. the _____ option in some Kia Sorentos allows drivers to control the effort and feel of the vehicle's steering.

Down

2. Bias voltage can be used to _____ _____. (two words)
4. A pressure sensor is also referred to as a pressure _____.
6. _____ from overcharging or from operating in a hotter climate, can significantly reduce battery life.
8. The piezoelectric element in a pressure sensor allows the semiconductor to output an _____ signal proportional to the change in pressure.
13. Available _____ is a limiting factor in the proper charging of a battery.

Technology and Feature Highlights of the New Kia Sorento *(Continued)*

115V A/C Power Inverter *(if equipped)*
To operate the inverter, depress the button located in the center console area.
Note: *Devices that consume more than 150 watts may not operate properly.*

Accessing User Settings via Steering Wheel Controls *(if equipped)*
The user settings can be accessed and modified by scrolling through the menus and selecting "user settings" (on models equipped with the Super Vision Cluster only).

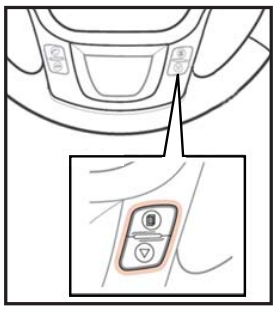

Seat Easy Access Feature *(if equipped)*
The Seat Easy Access feature is available on models equipped with a Super Vision cluster and power seats. This feature can be controlled in the user settings menu as discussed above. The recommended setting for this feature prior to customer delivery is **OFF**. This feature should be selected based on the customer's preference during the final-delivery review process.



Redesigned Second Row Seat Folding Mechanism
The second-row seat folding mechanism in the new Sorento has been redesigned. With the new folding mechanism, the second row headrest no longer folds and may contact the front seat back. It is important therefore to always move the front seat forward prior to folding the second row seats.

Charging and Testing Batteries

When it comes to lead acid batteries in vehicles, compromise is the word to remember. Due to time and money constraints, our methods of charging and testing batteries are compromised.

Battery Charging
What is the correct way to charge a lead acid battery? It will take 12 to 16 hours to properly charge a battery. After the battery is charged, it should then rest for at least 4 more hours before being tested.

Of course, spending 20 hours or more to charge a battery isn't practical. So, how should batteries be charged? As you know, there are limits to how fast a battery can accept a charge. Providing too much charge too quickly will overheat the battery causing evaporation. Most batteries are sealed so you cannot add water if level is low. The industry is seeing more smart chargers because it is too easy to damage batteries with older "dumb" chargers. These newer chargers control the rate of charge so the battery is not damaged, while still lowering the charge time.

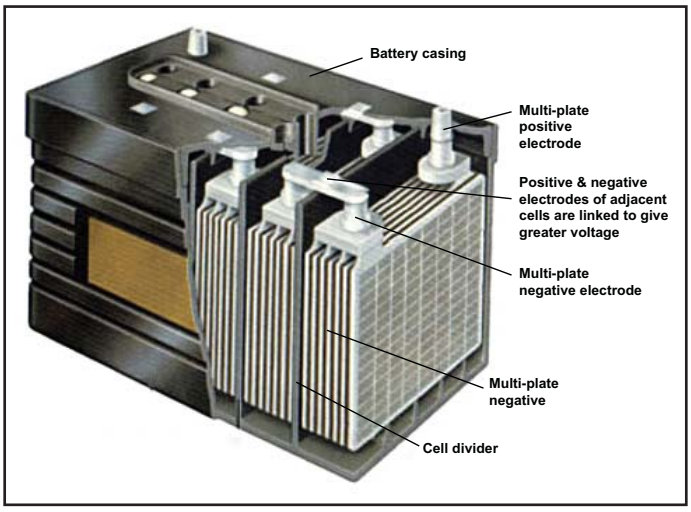

Continued on next page

Unfortunately advances in lead acid batteries have not kept up with our time demands. You will notice that as a battery becomes more charged, the amount of current it can accept drops off. Problems may arise when the current and voltage are not closely controlled, increasing the chance of battery damage.

Testing

Technicians use different methods to test Batteries, but many are not recommended. Some technicians like to load test batteries, but this may not be your best test. Using an VAT40 and drawing 300 amps for a number of seconds is not necessarily good for the battery or the end results. This is called a ½ Cold Cranking Amp (CCA) test. When performed correctly, this test can determine if the battery can start the engine but it can't determine how many times it will be able to do so. To determine how much energy remains in the battery, a Reserve Capacity (RC) test can be performed. One problem is that the ½ CCA and RC tests are rough on batteries, and can have a detrimental effect on battery life. The ½ CCA can move a lot of current. If there is a bad or broken connection in the battery undergoing a ½ CCA test, an arc can occur potentially igniting gasses in the battery. This safety concern alone should make us think twice about using the ½ CCA test.

To correctly perform a ½ CCA test, the battery must first be fully charged for 12 to 16 hours, then rested for at least 4 hours before the CCA test. The load for a ½ CCA test must be held for 15 seconds.



The RC test is very difficult to perform correctly outside of a laboratory setting. The correct procedure to perform the RC test is to pull a 25 amp load until the voltage drops to 10.5.

The RC rating of a battery is shown in minutes. If a battery is rated at 100 minutes, the battery voltage should not hit 10.5 volts until at least 50 minutes. In a lab setting, the battery is charged for 12 to 16 hours, rested for 4 hours, a half CCA test is performed, the battery rests again and then the RC test is performed. As you can see, properly testing a battery with this method would require a lot of time and some very expensive equipment, and would still present a safety concern.



So, what is the best way for techncians to check batteries in the real world? Can we get the same accuracy without the concerns of time and safety? The ½ CCA and RC tests measures the amount of current the battery can produce in a hurry and how long the battery can produce a smaller amount of current for a longer time frame. As we know, resistance controls the amount of current that flows through a circuit. The same goes for a battery. As the internal resistance of a battery increases, the amount of current the battery can produce decreases. So by looking at the resistance of the battery, the amount of output can be calculated. This is done by checking the conductance of the battery. The conductance is the ability of the battery to conduct the electricity. So there is a direct relationship between conductance and a battery's CCA.

Midtronics

The way Midtronics checks the accuracy of their testers is to compare to the ½ CCA and RC test. If a battery passed the GR8 tests, it should pass both the laboratory ½ CCA and RC test. If a battery fails one or both of the lab tests, it should fail the GR8

Continued on next page

Charging and Testing Batteries *(Continued)*

tests. Although the GR8 is very accurate and doesn't require 20 to 24 hours for charging and testing. As mentioned earlier, when dealing with batteries, compromise is the rule.

The Midtronics GR8 handheld control unit checks the conductance of the battery. All in all, the conductance test is quite accurate. So what about other battery issues that do not necessarily affect CCA. Some issues like stratification (separation of the electrolyte), damaged cells and shedding (lead paste falling of of the grids) are best checked using dynamic testing. The GR8 charger unit can check these issues. The GR8 will start to charge the battery and monitor the battery's acceptance of the charge. Periodically the charge is stopped to check how well the battery is taking the charge and to perform load and conductance tests. Sure, this takes some time but it is a very good way to test the battery. Again, this is part of the compromise. During the Diagnostic Charge, if the battery is not accepting the charge and recovering the CCA in a certain time frame, the battery will be called bad. There is a difference between the "Battery Test" and the "Diagnostics Charge" in the GR8 menu. Think of the "Battery Test" as a quick test and the "Diagnostics Charge" as a deeper diagnostic exam of the battery.

Damaging a Battery

From the time a battery is manufactured, it basically is starting to die. If a battery is not kept fully charged, sulfation will occur. As the battery discharges, sulfur starts to leave the electrolyte and form sulfate crystals on the plates. A battery setting in a state other than 100% State Of Charge (SOC) is sulfating. It is very important to keep a battery fully charged. In some cases some of these sulfate crystals can be removed through different charging regimens. However, the longer the crystals are allowed to form, the harder they are to remove, and in most cases they cannot be removed.

Heat is a big battery killer, whether it results from overcharging or from operating in a hotter climate. A battery that would live for 5 years at a temperature of 92°F might only live for 2 ½ years at 106°F. As you can see, temperature has a direct impact on battery life. Lower temperatures will reduce the amount of energy the battery can produce, but higher temperatures will limit the duration of its service. Heat and charge/discharge cycles will shorten the life of a battery.

In addition, two batteries from the same factory and put into the same make/model vehicles will not live the same length of time. All batteries should not be charged using the same amps, volts and time. Because all batteries are different, a single test will not accurately or thoroughly diagnose all of a battery's faults.

Bias Voltage

Why do we see a bias voltage on some circuits? How does the control unit know to set DTCs for an open or shorted circuit?

Let's look at a TPS circuit although we see bias voltage on many other circuits. The sensor signal circuit carries the TPS signal from the TPS to the ECM. The ECM puts a small "bias" voltage on the line to help check for an open or shorted circuit. This bias signal is a very small current so it does not affect the sensor signal. If this does not make sense, think of a trickling garden hose put in a river. You will not see the flow from the hose until the hose is lifted out of the river. This current goes through a resistor (like a faucet that controls the flow) in the ECM. We only see a voltage drop across the resistor when current is flowing.

Continued on next page

Bias Voltage *(Continued)*

If the ECM sees only the bias voltage on the sensor circuit, it sees this as an open circuit. When the circuit is open, current does not flow to ground so we don't see a voltage drop. If the ECM sees no voltage on the circuit, it sees this as grounded circuit. When the circuit is grounded, all the voltage drops across the resistor in the ECM.

You can expect to see bias voltages on Kia vehicles around 1.8v, 2.5v, 3.3v, and 5v.

We can use this bias voltage to check circuits. Rather than to pull both connectors, it may be quicker to check the bias voltage. Pull only the connector at the TPS, then check for the bias voltage on the sensor circuit. If a voltage is on the line, you can be confident that the circuit is complete and there is a bias.

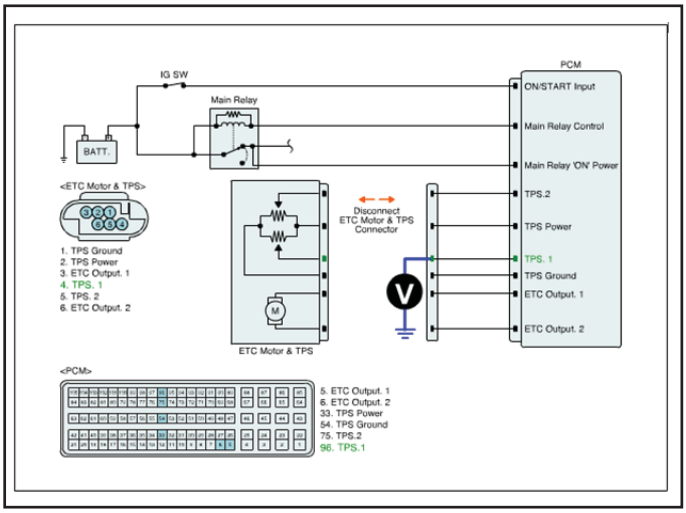

The next question is, how do you know if the circuit you are working on has a bias voltage? Many times you will not know. If you are checking a circuit and measure 3.3 volts on the wire, you probably have a bias voltage and the circuit is most likely not open or shorted.

TechTimes Crossword Puzzle Solution

We hope you gave this issue's crossword puzzle on page 8 a try. In case you need a little help, here are the answers to the puzzle clues.

