Service Bulletin

Mazda North American Operations
Irvine, CA 92618-2922

Subject: UNABLE TO LOWER REAR SEATBACK WITH REMOTE HANDLE / SEATS HARD TO LOCK	Bulletin No: 09-042/12
	Last Issued: 11/07/2012

APPLICABLE MODEL(S)/VINS

2013 CX-5 vehicles equipped with a 4:2:4 split type rear seat with VINs lower than JM3KE******192961 (produced before Jan. 20, 2012)

DESCRIPTION

Some vehicles equipped with a 4:2:4 split type rear seat may be unable to lower the rear seatback (A) when pulling the left (B) and/or right (C) remote handles. Also, the seatbacks may not fully latch (lock) when placed in the upright position.

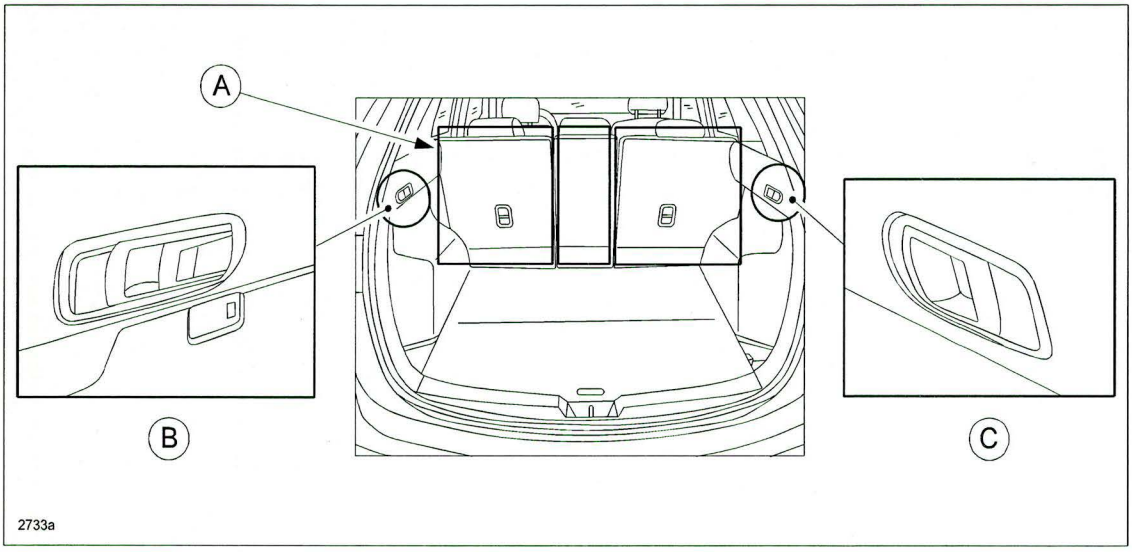

This concern may be caused by an incorrect seatback remote cable adjustment position. The current adjustment position may not provide enough tension for the cable to unlock the seatback latches.

The position of the seatback remote cable adjustment has been changed to the center position at mass-production.

Customers with this concern should have their vehicle repaired according to the following repair information.

REPAIR PROCEDURE

NOTE: This repair only applies to vehicles equipped with a 4:2:4 split type rear seat.

1. Verify the customer concern.
2. Lower the rear seatbacks using the seatback knobs.

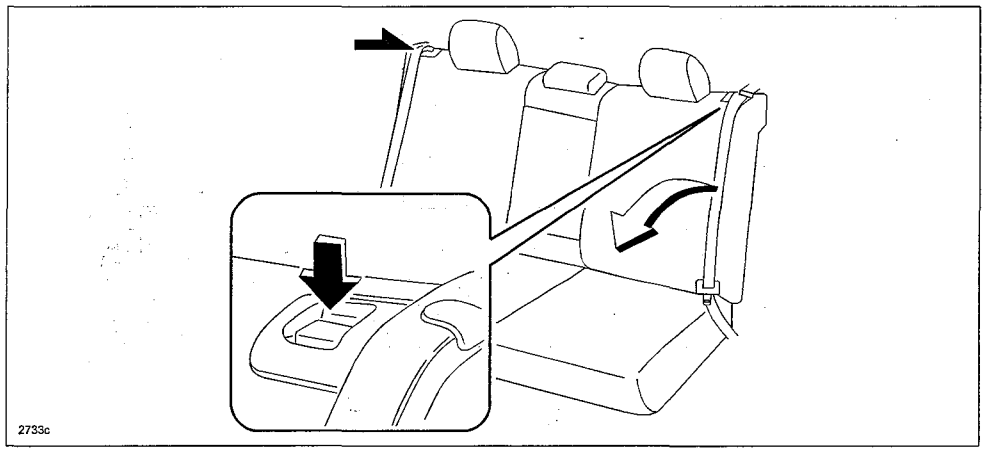

3. From the rear cargo area, lift and fold the trunk board forward and out of the way.

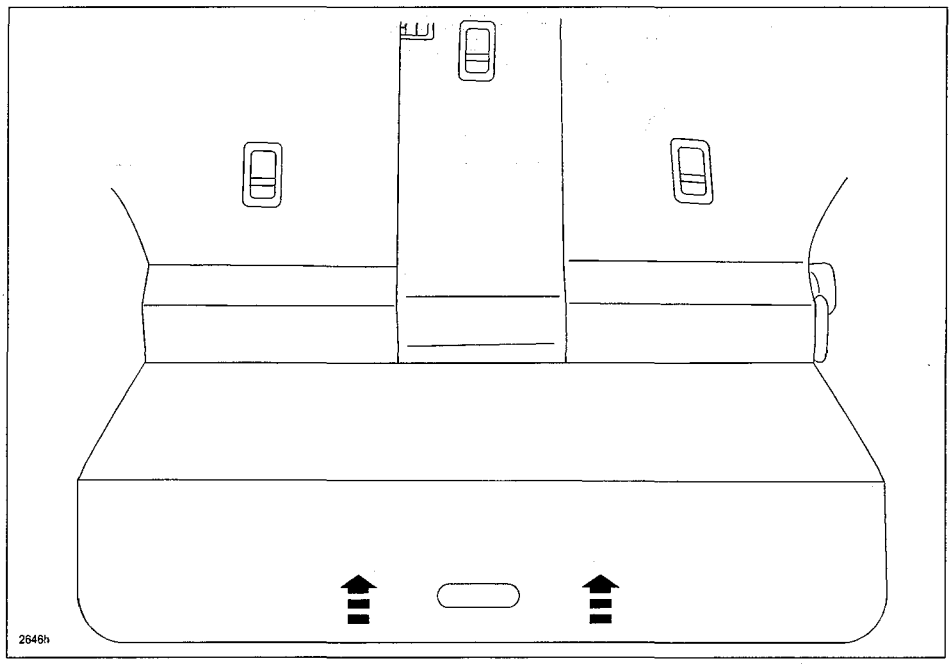

4. Locate the remote cable adjuster (A) for the left seat (B), center seat (C) and right seat (D).

   NOTE: Each seat has a separate cable and cable adjuster.

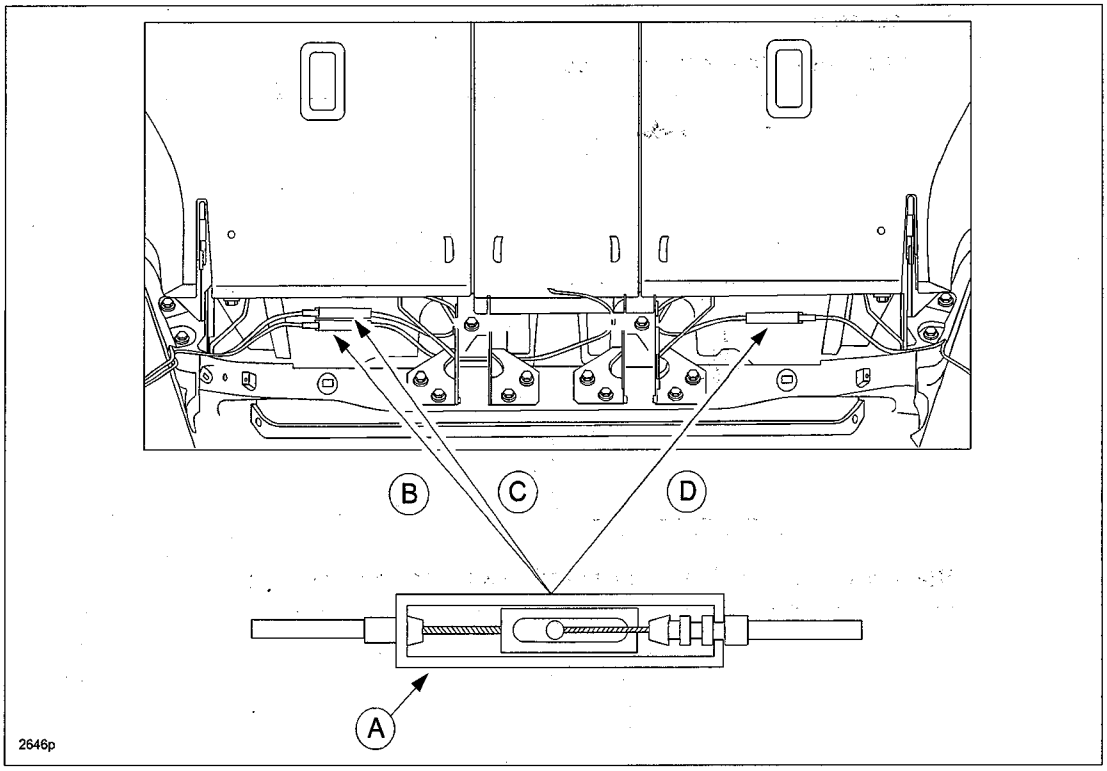

Left Seat: (white label = left seat back (B)) and **Center Seat:** (red label = center seat back (C))

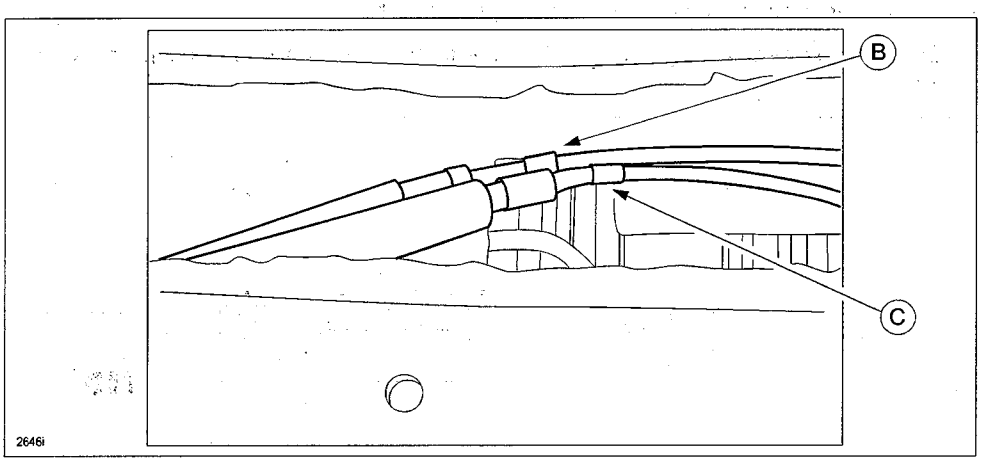

Right Seat: (white label = right seat back (D))

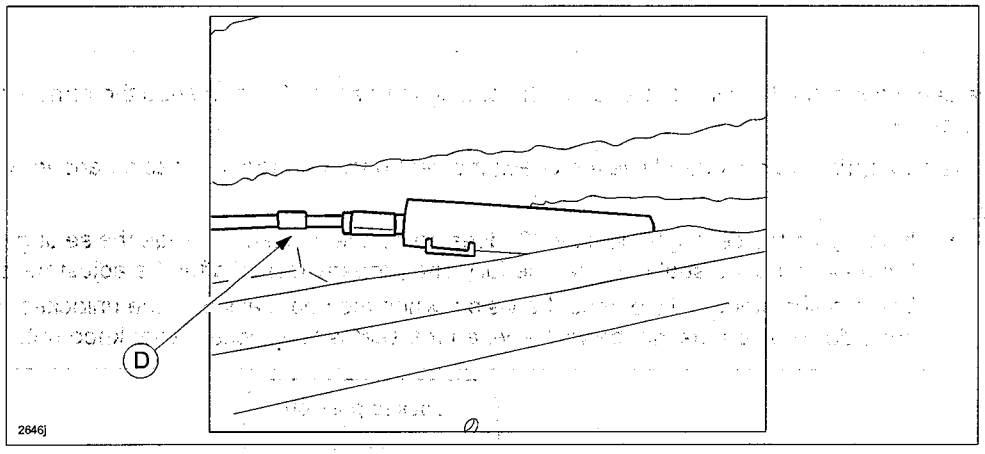

5. Using a small flathead screwdriver, pop open the affected remote cable adjuster housing and check the current cable adjustment setting position (1, 2 or 3) as shown below.

   NOTE: Cable adjustment setting position "3" is the factory setting for vehicles produced before Jan. 20, 2012.

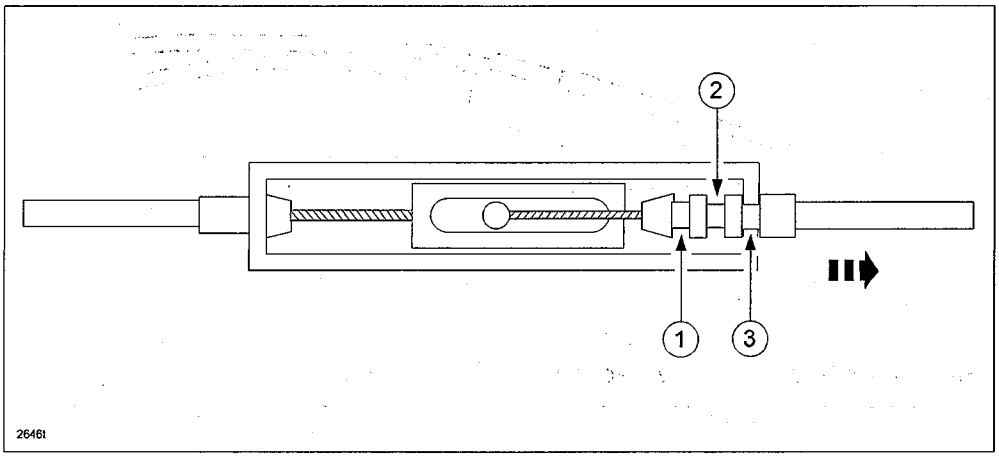

6. Pull the cable out of the housing and change the setting to position "2", then snap the remote cable adjuster housing closed.
7. Using the appropriate remote handle lever, check the seat back for proper releasing and locking operation.

   NOTE:
   - If changing the setting to position "2" does not fix the concern, change the setting to position "1", but make sure the seat back can be fully and properly locked after the adjustment is made.
   - The red seat knob indictor must be visible when the seat back is in the unlocked position (seat knob down) and must not be visible when the seat is fully locked (seat knob up).

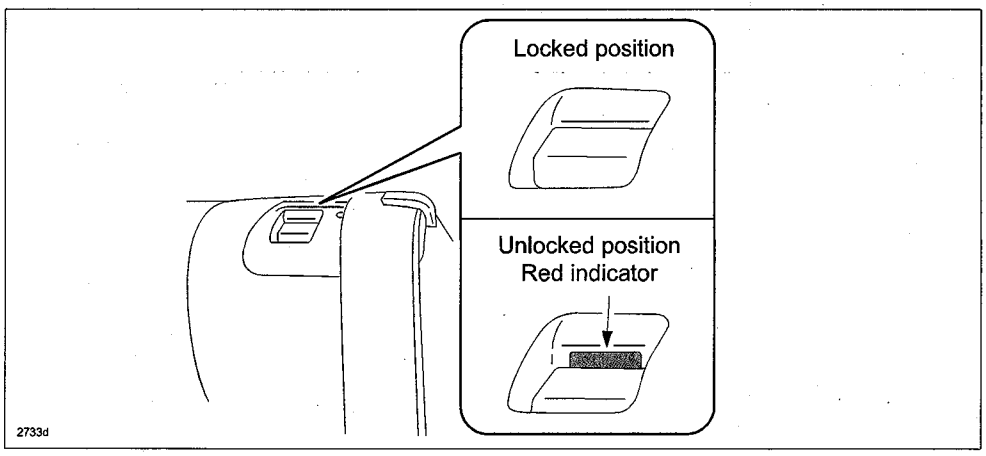

8. Verify repair.

WARRANTY INFORMATION

NOTE:

- This warranty information applies only to verified customer complaints on vehicles eligible for warranty repair.
- This repair will be covered under Mazda's New Vehicle Limited Warranty term.
- Additional diagnostic time cannot be claimed for this repair.

Warranty Type	A
Symptom Code	41
Damage Code	9H
Part Number Main Cause	C001-56-723A (remote handle case)
Quantity	0
Operation Number / Labor Hours:	XXH34XRX / 0.2 Hrs. (adjust one, two or three seatbacks)

NOTE: This repair only applies to vehicles equipped with a 4:2:4 split type rear seat.

Tony Lawrence

From: Tony Lawrence
Sent: Wednesday, November 07, 2012 4:10 PM
Subject: MAZDA DEALER NOTICE - SERVICE BULLETIN RELEASE

SERVICE BULLETIN RELEASE - 11/07/2012

2012 INDEX: http://www.mstore2000.com/PDF_Files/index11-07-12.pdf

The following Service Bulletin has just been issued.

- For latest MS3 postings, click here: https://portal.mazdausa.com/m173/service/esi/MazdaServiceShop

- For printable PDF files from MStore, click on the link below each TSB title:

*** If the links do not automatically take you directly to the document, cut and paste the link into your internet browser address window and press enter.**

NEW BULLETIN

09-042/12 - 2013 CX-5 - UNABLE TO LOWER REAR SEATBACK WITH REMOTE HANDLE / SEATS HARD TO LOCK

http://www.mstore2000.com/PDF_Files/09-042-12-2733.pdf

UPDATED BULLETIN

01-024/12 - MAZDA SERVICE PROGRAM (MSP38) - ROUGH IDLE AND ENGINE STALL DURING LONG IDLING

http://www.mstore2000.com/PDF_Files/01-024-12-2729a.pdf

Please distribute this information to all parts and service personnel.