Service Bulletin

Mazda North American Operations
Irvine, CA 92618-2922

Subject: SQUEAK NOISE FROM ENGINE COMPARTMENT	Bulletin No: 01-021/12
	Last Issued: 11/28/2012

BULLETIN NOTE

- This bulletin supersedes the previous bulletin 01-021/12 issued on 07/17/12 and 08/24/12. The REPAIR PROCEDURE, PARTS INFORMATION, and WARRANTY INFORMATION have been revised.
- Changes are noted below in Red beside the change bar.

APPLICABLE MODEL(S)/VINS

2010-2013 Mazda3 (including 2.0L SKYACTIV)

DESCRIPTION

Some vehicles may exhibit a squeak noise from the engine compartment when the vehicle starts moving and/or at the time of transmission shifting. This is caused by stick-slip noise occuring at the contact surfaces between the No. 4 engine mount rubber and the No. 4 engine mount bracket when the engine shakes back and forth. To correct the problem, the No. 4 engine mount is replaced and grease is applied on the contact surfaces of the No. 4 engine mount bracket.

Customers having this concern should have their vehicle repaired using the following repair procedure.

REPAIR PROCEDURE

1. Verify customer concern.
2. Remove the No. 4 engine mount rubber (A) from the No. 4 engine mount bracket (B). Refer to MS3 online instructions or Workshop manual section 09-20 ENGINE REMOVAL/INSTALLATION.

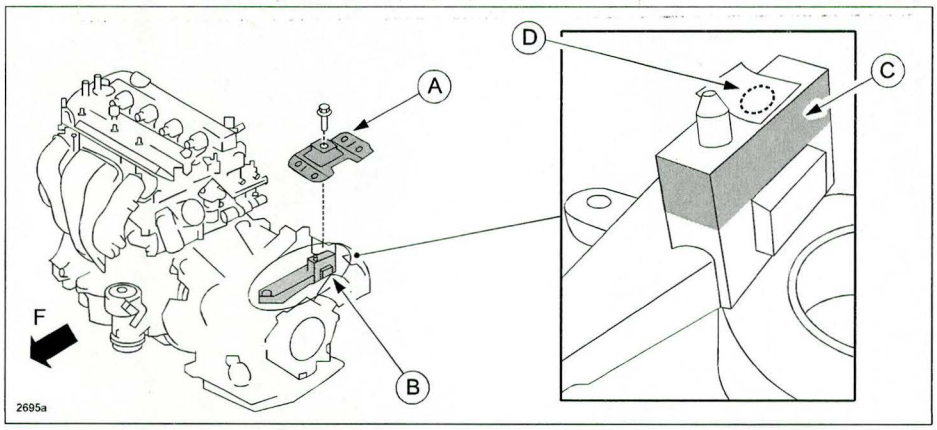

3. Clean the surfaces of the No. 4 engine mount bracket (C) where it contacts the engine mount rubber.
4. Place masking tape over the bolt hole (D) of the No. 4 engine mount bracket to prevent grease from entering the hole.

5. Remove the original mount rubber and install a new one (A) on the No. 4 engine mount bracket (B).
   NOTE: Install the mount rubber with the notched side facing down.

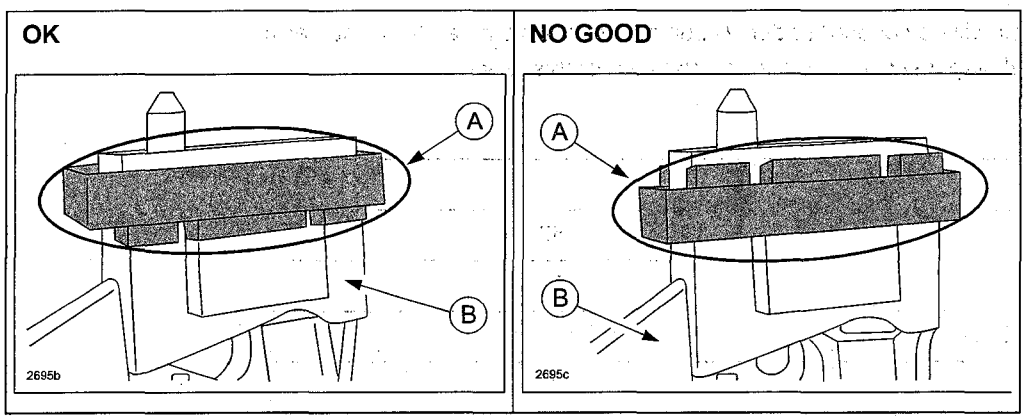

6. Wipe off any grease adhering to the top surface and remove the masking tape.
   NOTE: DO NOT let grease enter the bolt hole, otherwise an incorrect tightening torque may be given.
7. Clean the surfaces of the No. 4 engine mount rubber where it contacts the mount rubber.
8. Install the No. 4 engine mount rubber (F=front).
9. Install other removed parts in the reverse order of removal.
10. Verify repair.

PART(S) INFORMATION

Part Number	Description	Qty.
BBY4-39-074	Mount Rubber	1

WARRANTY INFORMATION

NOTE:

- This warranty information applies only to verified customer complaints on vehicles eligible for warranty repair.
- This repair will be covered under Mazda's Powertrain Limited Warranty term.
- Additional diagnostic time cannot be claimed for this repair.

Warranty Type	A
Symptom Code	82
Damage Code	97
Part Number Main Cause	BBY4-39-074
Quantity	1
Operation Number / Labor Hours:	XXH5RXRX / 0.7 Hrs. (2.0L and 2.5L) XXH5SXRX / 0.8 Hrs. (2.0L SKYACTIV-G)