ACURA **Service Bulletin** **12-037**

Applies To: **2010–12 TSX L4** – ALL **October 27, 2012**

2010–12 TSX: Clicking When Turning the Steering Wheel

SYMPTOM

A clicking noise comes from the upper steering column cover when turning the steering wheel.

PROBABLE CAUSE

Burrs on a spring within the steering angle sensor assembly intermittently bind, which produces a clicking noise.

CORRECTIVE ACTION

Replace the steering angle sensor assembly.

PARTS INFORMATION

Steering Angle Sensor Assembly (Combination Switch Body): P/N 35251-TA0-B11

TORX Bolt, 6X23 (two required): P/N 90134-S6A-A80

WARRANTY CLAIM INFORMATION

The normal warranty applies.

Operation Number: 5101A1

Flat Rate Time: 0.6 Hours

Failed Part: P/N 35251-TA0-B11

Defect Code: 03214

Symptom Code: 04201

REPAIR PROCEDURE

NOTE: This procedure is in an outline form that you can also use as a checklist for the repair. If you need more details, bookmark the following procedures in the appropriate service manual, or view them online:

- Battery Terminal Disconnection/Reconnection
- Driver's Airbag Removal/Installation
- Steering Wheel Removal/Installation
- Steering Column Cover Removal/Installation

1. With the engine idling, set the steering wheel and front wheels in the straight-ahead position, then turn off the ignition switch and remove the key.
2. Place a piece of masking tape on top of the steering wheel hub, then place another piece of tape on the steering column cover. Draw a line connecting both tapes; this will help you align the steering wheel when you reinstall it.

ALIGNMENT MARKS

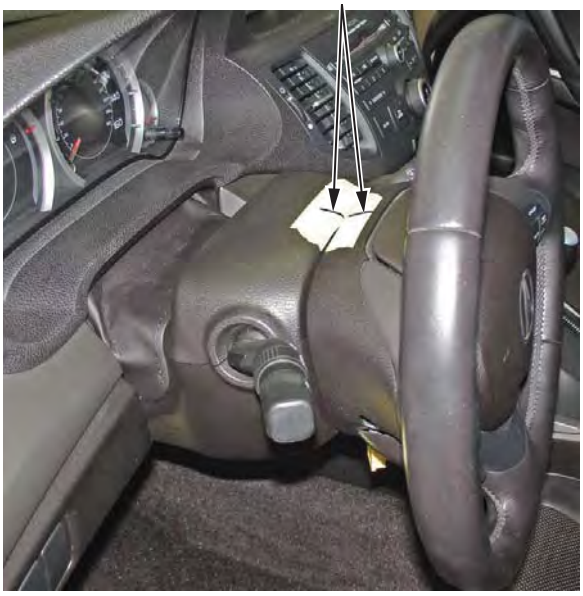

© 2012 American Honda Motor Co., Inc. – All Rights Reserved

Skill Level R REPAIR

CLIENT INFORMATION: The information in this bulletin is intended for use only by skilled technicians who have the proper tools, equipment, and training to correctly and safely maintain your vehicle. These procedures should not be attempted by “do-it-yourselfers,” and you should not assume this bulletin applies to your vehicle, or that your vehicle has the condition described. To determine whether this information applies, contact an authorized Acura automobile dealer.

3. Do the battery terminal disconnection procedure, and wait 3 minutes before continuing work.

4. Remove the access panel from the steering wheel, then disconnect the cable reel 4P connector from the driver's airbag 4P connector.

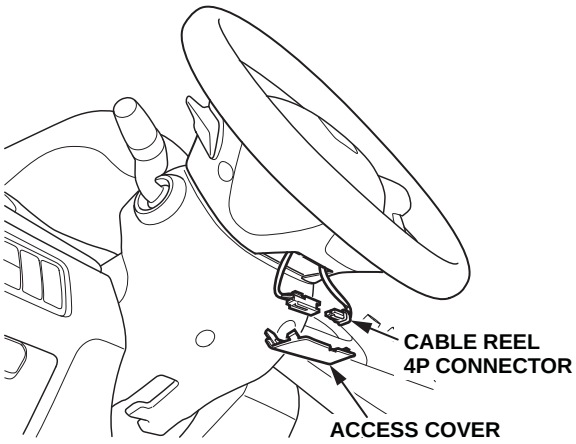

5. Remove the two TORX bolts using a TORX T30 bit.

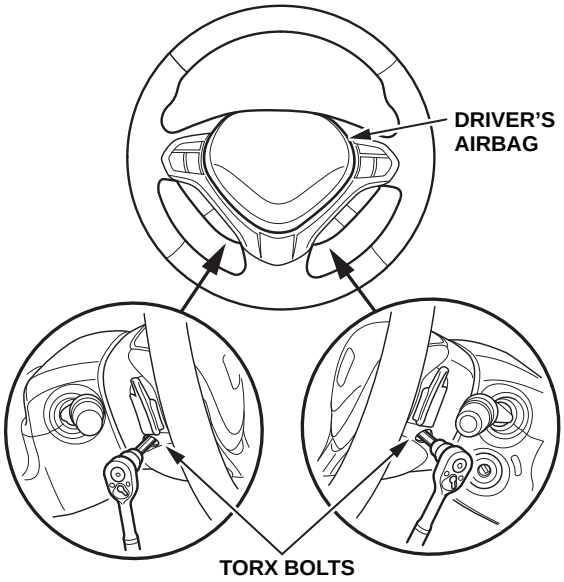

6. Remove the driver's airbag.

7. Disconnect the cable reel subharness 20P connector from the cable reel.

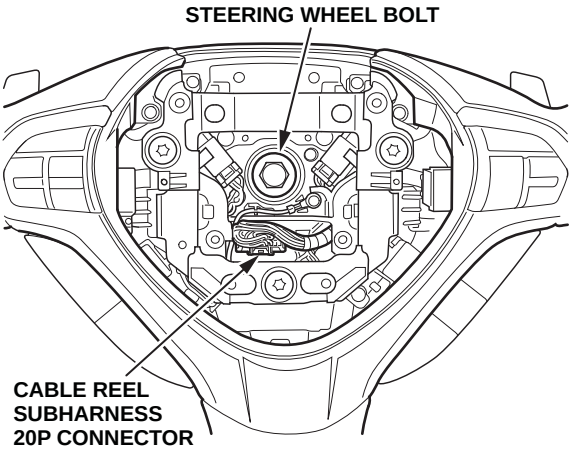

8. Loosen the steering wheel bolt, then install a commercially available steering wheel puller and remove the steering wheel.

9. Remove the upper and lower column covers.

10. Disconnect the dashboard wire harness 4P connector from the cable reel 4P connector, then disconnect the dashboard wire harness 20P connector from the cable reel.

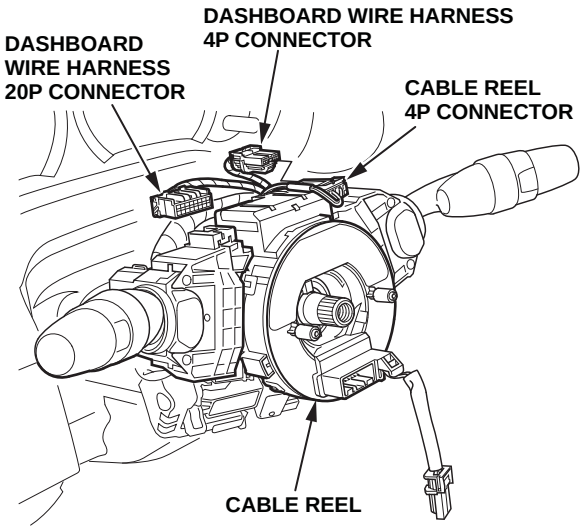

11. Release the upper lock tab under the cable reel connector with a 90° hook-shaped tool. Slide the tool below the cable reel connector just above the lock tab. Release the lower lock tab, and slide the cable reel off the column.

    NOTE: Make sure not to turn the cable reel after it is removed.

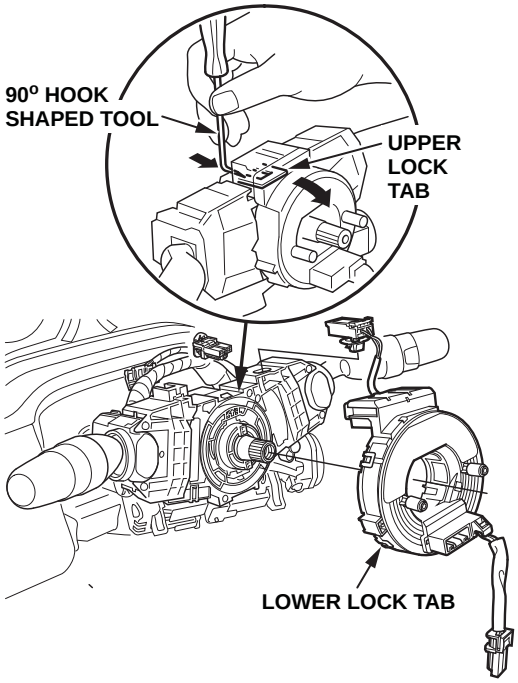

12. Disconnect the wire harness connectors.

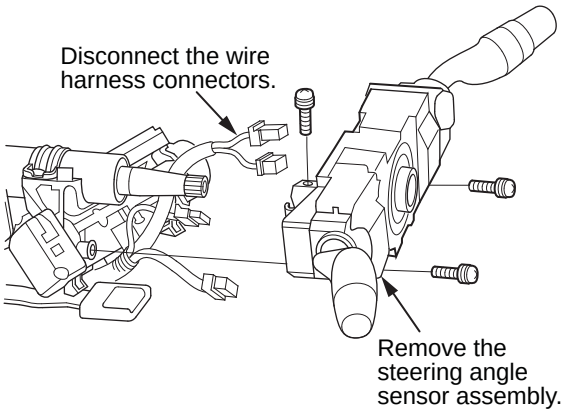

13. Remove the steering angle sensor assembly by removing the screws.

14. Remove the wiper/washer and the headlight/turn signal switches, and install them on a new steering angle sensor assembly.

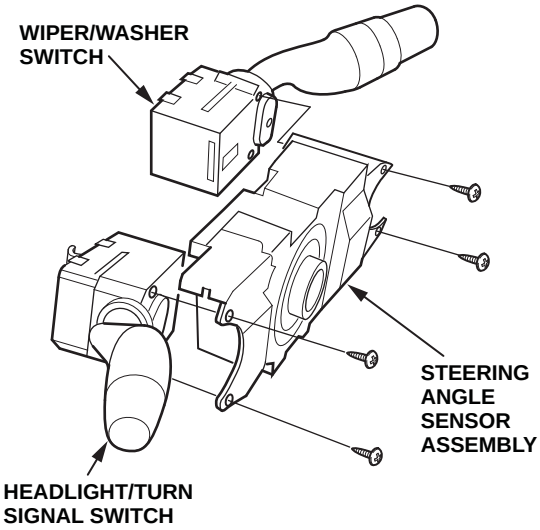

15. Install the new steering angle sensor assembly, and tighten the screws in the sequence shown.

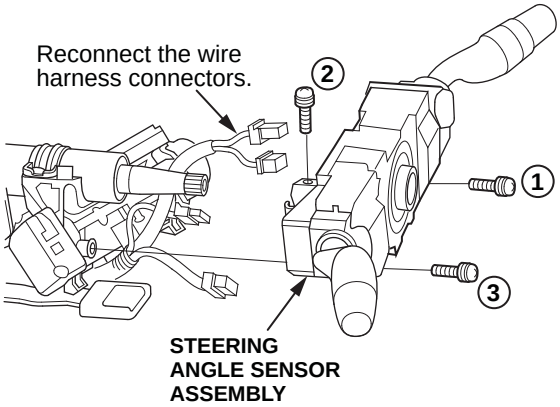

16. Reconnect the wire harness connectors.

17. Set the turn signal canceling sleeve so that the projections are aligned vertically.

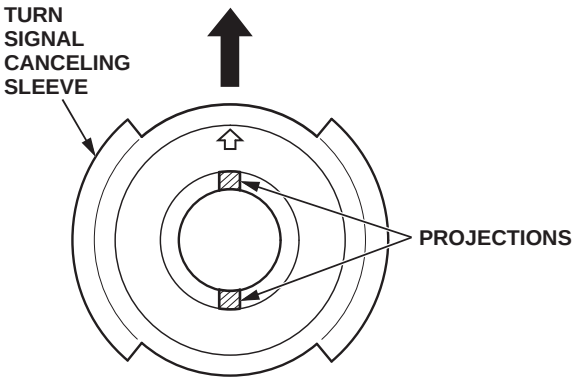

18. Reinstall the cable reel. Center the cable reel if it was turned after removing it from the column. Do this by first rotating the cable reel clockwise until it stops. Then, rotate it counterclockwise about three full turns. The arrow mark on the cable reel label should point straight up.

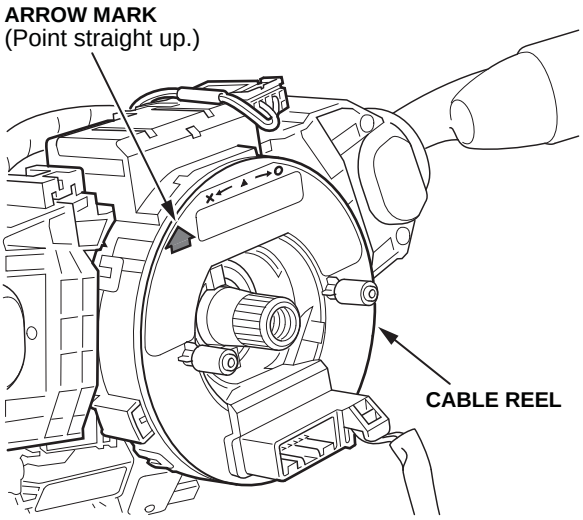

19. Reconnect the dashboard wire harness 4P connector to the cable reel 4P connector, then reconnect the dashboard wire harness 20P connector to the cable reel.

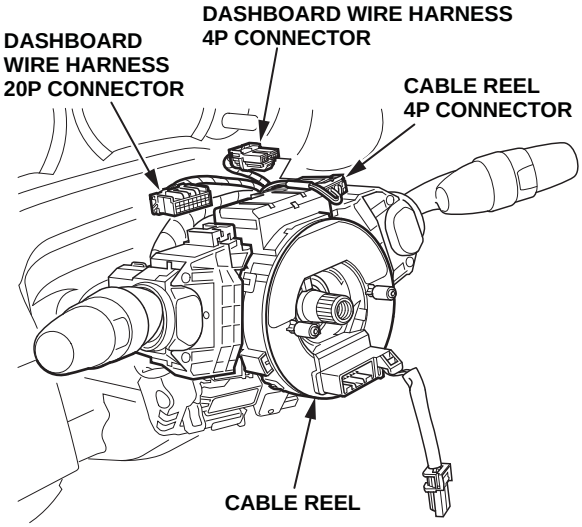

20. Reinstall the upper and lower column covers.

21. Position the two tabs of the turn signal canceling sleeve as shown. Install the steering wheel on the steering column shaft; make sure the steering wheel hub engages the pins of the cable reel and tabs of the turn signal canceling sleeve. Do not tap on the steering wheel or steering column shaft when installing the steering wheel.

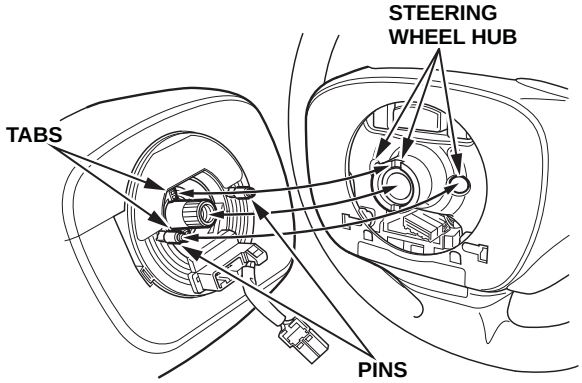

22. Align the steering wheel with the marks you drew on the masking tape created in step 2. Install the steering wheel bolt, and torque it to 39 N·m (29 lb-ft). Connect the cable reel subharness 20P connector. Make sure the wire harness is routed and fastened properly.

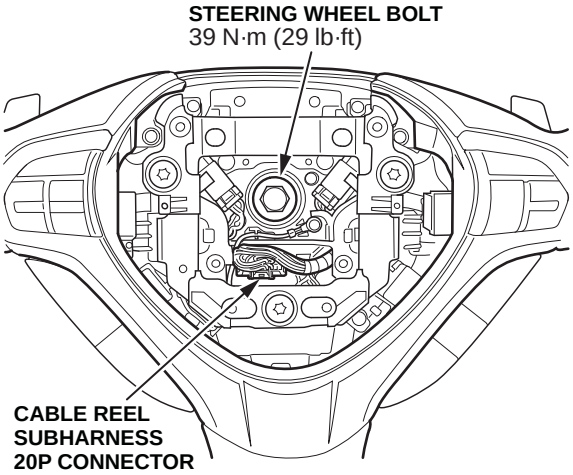

23. Install the driver's airbag into the steering wheel, and tighten the new TORX bolts to 9.8 N·m (7.2 lb-ft), using a TORX T30 bit.

    NOTE: Make sure the clearance between the steering wheel and the horn pad is within the range specified below.

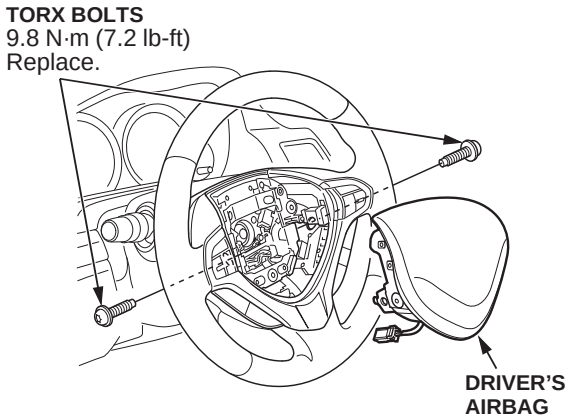

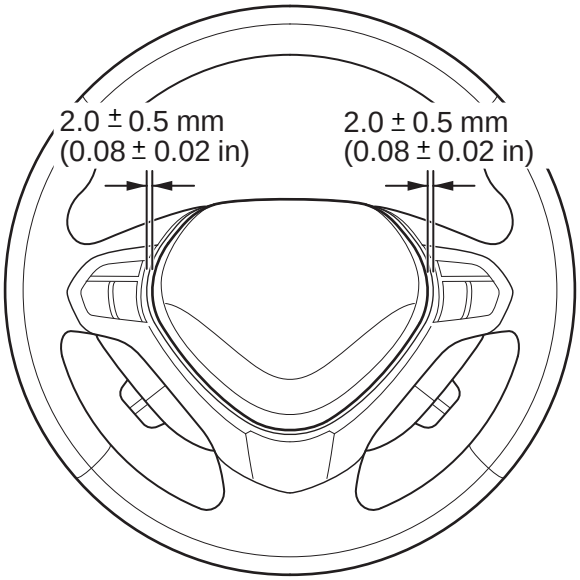

24. Connect the driver's airbag 4P connector to the cable reel 4P connector, then install the access panel on the steering wheel.

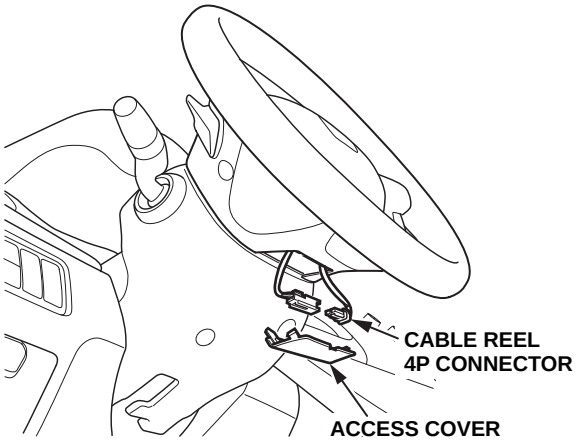

25. Do the battery terminal reconnection procedure.