SUBJECT: Washington Metropolitan Area Transit Authority (WMATA) Pleasability

MODELS AFFECTED: H 40/50 EP™ Drive Units

Introduction:

As a pleasability field action, Allison Transmission, Inc. has identified the need to replace drive unit suction filters on the 401 Pre-4th Generation H 40/50 EP™ equipped busses operating in the Washington Metropolitan Area Transit Authority (WMATA) Fleet. The current filter P/N 29538846 will be replaced with filter P/N 29552740. The new filter utilizes a relocated suction filter opening. Once the filter has been replaced, the oil level shall be set to read “ok” on the Push Button Shift Selector (PBSS).

Service Procedure:

Allison Transmission, Inc. has identified the listed operations for this Pleasability Field Action. Johnson and Towers will perform the operations listed below and submit a claim per the instructions below: (Refer toFigure 1)

1. Drain oil from drive unit.
2. Remove lube filter cover (14) and gasket (13).
3. Remove oil pan (7) from drive unit.
4. Replace the suction filter (3) with new filter P/N 29552740.
    a. Torque the 2 M6 retaining clip bolts to 10-13 N·m (7-10 lb ft).
5. Discard old drive unit oil pan gasket (6).
6. Install new lube filter (12), P/N 29545777.
7. Use new oil pan gasket (6), P/N 29538847, install oil pan.
    a. Torque the M8 oil pan bolts (1), (5) to 24-29 N·m (18-21 lb ft.).
8. With new lube filter cover O-ring (13), P/N 23018950 in place, reinstall lube filter cover (14).
9. Fill with fluid.

Copyright © 2012 Allison Transmission, Inc. All Rights Reserved.

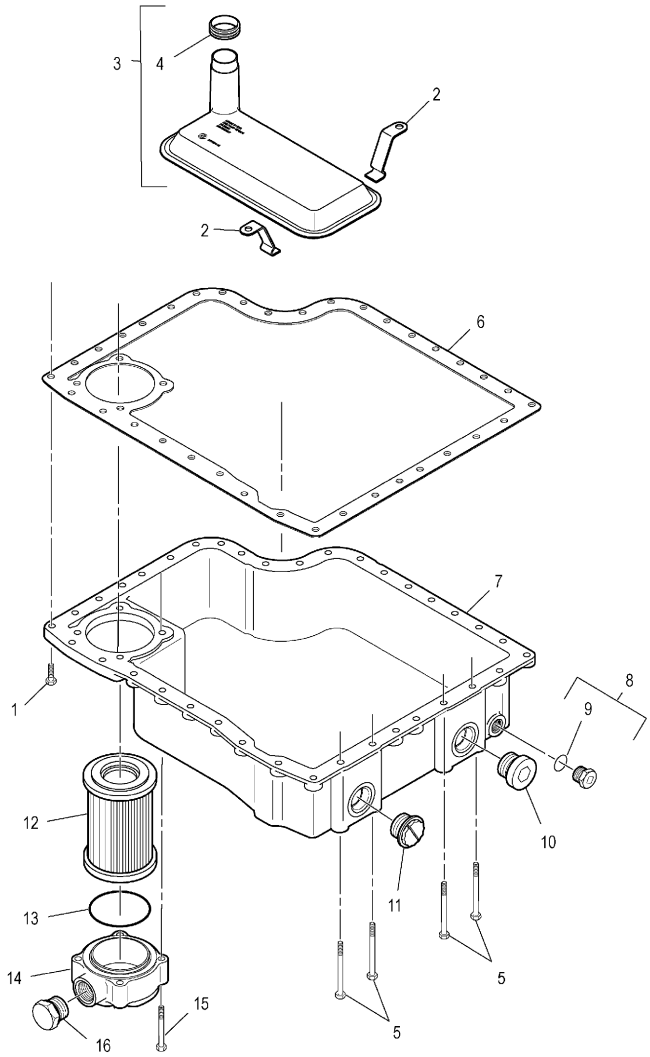

Figure 1. Oil Pan and Filters

Copyright © 2012 Allison Transmission, Inc. All Rights Reserved.

Table 1. Required Part Numbers

Part Number	Description	Quantity
29552740	Filter Assembly, Suction	1
29538847	Gasket, Oil Pan	1
29545777	Lube Filter	1
23018950	Lube Filter O ring	1
N/A	TranSynd®	5 gallons (18.92 liters)

NOTE: Parts and fluid will be provided free of charge and are not to be added to the AWAARE claim.

Claim Information:

Claim Type	CT04
Special Activity Code	2011FA07
Primary Failed Part	29538846
Complaint Code	AT02
Failure Code	CC03

Allison Service Outlets must use the published Allison Transmission Labor Time Guide for work performed. The following labor operations will be required to complete the Pleasability Field Action.

Table 2. Labor Time

9.41-00	R & R Oil Pan Includes: Drain and fill drive unit	0.5 hr
9.42-00	R & R Integral Filters (Both Filters)	0.3 hr
9.69-00	General labor operation	0.2 hr

Claims must be submitted against the Drive Unit Serial Number.

All work must be completed prior to December 31, 2012. Any repair orders completed after this date will not be reimbursed.

Any repairs not prescribed on this Pleasability Field Action shall be required on a separate claim.

Copyright © 2012 Allison Transmission, Inc. All Rights Reserved.