Recall Campaign

August 2012
FL629A-F
NHTSA #12V-266 (Non-School Buses)
NHTSA #12V-358 (School Buses)
Transport Canada #2012-193 (Non-School Buses)
Transport Canada #2012-228 (School Buses)

Subject: Detroit Axle Front Axle Knuckles

Models Affected: Specific Freightliner Business Class M2, Cascadia, Columbia, and Coronado vehicles and Freightliner Custom Chassis XC chassis and B2 school bus chassis (Thomas Built Buses Saf-T-Liner C2) manufactured April 18, 2012, through April 30, 2012.

General Information

Daimler Trucks North America LLC, on behalf of its Freightliner Trucks Division and its wholly owned subsidiary, Freightliner Custom Chassis Corporation, has decided that a defect that relates to motor vehicle safety exists on the vehicles mentioned above.

There are approximately 130 vehicles involved in this campaign.

Certain Detroit Axle front axle knuckles may have a machining discrepancy in the wheel bearing area which could lead to shorter than expected bearing and knuckle life. In the worst case, the wheel could separate from the axle, possibly resulting in a vehicle crash causing property damage and/or personal injury.

The front axle knuckles will be inspected for improper machining. Knuckles not passing inspection will be replaced. It is expected that approximately 30 percent of knuckles will require replacement.

Additional Repairs

Dealers must complete all outstanding Recall and Field Service campaigns prior to the sale or delivery of a vehicle. A Dealer will be liable for any progressive damage that results from its failure to complete campaigns before sale or delivery of a vehicle.

Owners may be liable for any progressive damage that results from failure to complete campaigns within a reasonable time after receiving notification.

Work Instructions

Please refer to the attached work instructions. Prior to performing the campaign, check the vehicle for a completion sticker (Form WAR260).

Replacement Parts

Replacement parts are now available and can be obtained by ordering as noted below.

If our records show your dealership has ordered any vehicles involved in campaign number FL629A-F, a list of the customers and vehicle identification numbers will be available on AccessFreightliner.com. Please refer to this list when ordering parts for this recall.

Parts Ordering Instructions:

Order parts in **Table 1** directly from Detroit Axle. Order parts in **Table 2** from your facing Parts Distribution Center.

To order parts in **Table 1**:

- Email Daniel Hannemann at daniel.hannemann@daimler.com.
- Carbon copy (cc) Alessandro Franceli at alessandro.franceli@daimler.com
- In the email subject line put "FL629 Knuckle Order"
- In the email body provide the following information:
  - Vehicle identification number
  - Affected knuckle (driver, passenger, or both)
  - Contact name, number, and email address of person at dealership receiving the parts
  - Dealer shipping address

Table 1 - Replacement Parts for FL629A-F ordered directly from Detroit Axle

Campaign Number	Part Information	Part Description	Qty.
FL629A & D	Driver side	LH Knuckle	1 ea
		Steering Arm Bolt	2 ea
		Friction Bearing	1 ea
		Grease Cap	2 ea
	Passenger side	RH Knuckle	1 ea
		Thrust Bearing	1 ea
		Grease Cap	2 ea
FL629B & E	Driver side	LH Knuckle	1 ea
		Steering Arm Bolt	2 ea
		Friction Bearing	1 ea
		Grease Cap	2 ea
	Passenger side	RH Knuckle	1 ea
		Thrust Bearing	1 ea
		Grease Cap	2 ea
FL629C & F	Driver side	LH Knuckle	1 ea
		Steering Arm Bolt	2 ea
		Friction Bearing	1 ea
		Grease Cap	2 ea
	Passenger side	RH Knuckle	1 ea
		Thrust Bearing	1 ea
		Grease Cap	2 ea

Table 1, continued on the next page

Campaign Number	Part Information	Part Description	Qty.
FL629A-F	These parts included in each knuckle order	Draw Key	2 ea
		Draw Key Nut	2 ea
		Snap Ring	2 ea
		Cotter Pin	1 ea
		TR Arm Bolt	2 ea
		Spacer 1.7	1 ea
		Spacer 1.8	1 ea
		Spacer 1.9	1 ea
		Spacer 2.0	1 ea
		Spacer 2.01	1 ea

Table 1, continued from previous page

Table 2 - Replacement Parts for FL629A-F ordered directly from a Parts Distribution Center

Campaign Number	Part Information	Part Description	Part Number	Qty. per Kit	Suggested Wholesale*
FL629A, B, D, & E	Order for inspection and replacement	Hub Seal	CHR 35058	2 ea	$29.76 U.S. $34.07 CAN
		Hub Gasket	CHR 453869	2 ea	$1.22 U.S. $2.20 CAN
FL629C & F	Order for inspection and replacement	Hub Seal	CHR 35066	2 ea	$33.09 U.S. $29.91 CAN
		Hub Gasket	CHR 453795	2 ea	$1.35 U.S. $2.56 CAN
FL629A & D	Order for each knuckle replaced when the vehicle has over 5,000 miles	Inner Bearing Cone	CM 103596	1 ea	$23.72 U.S. $24.19 CAN
		Inner Bearing Cup	SBN NP026773TRB	1 ea	$18.27 U.S. $18.64 CAN
FL629B, C, E, & F	Order for each knuckle replaced when the vehicle has over 5,000 miles	Inner Bearing Cone	SBN HM212049TRB	1 ea	$18.34 U.S. $18.71 CAN
		Inner Bearing Cup	SBN HM212011FDM	1 ea	$18.59 U.S. $18.97 CAN

* Please charge all U.S. and Canadian Direct Warranty Customers the above-listed price for the kit, as they are authorized to perform their own Recalls. This pricing does not apply to Export Distributors.

Table 2

Removed Parts

U. S. and Canadian Dealers, please follow Warranty Failed Parts Tracking shipping instructions for the disposition of all removed parts. Export distributors, please destroy removed parts unless otherwise advised.

Labor Allowance

Table 3 - Labor Allowance

Campaign Number	Procedure	Time Allowed (hours)	SRT Code	Damage Code
FL629A-F	Inspect LH and RH side steering knuckles	1.3	996-0883A	000-Inspection
	Inspect both knuckles and replace one knuckle	3.0	996-0883B	000-Modifiedx
	Inspect both knuckles and replace two knuckles	4.9	996-0883C	000-Modifiedx
	Inspect both knuckles and replace one knuckle and hub bearing	3.5	996-0883D	000-Modifiedx
	Inspect both knuckles and replace two knuckles and hub bearings	5.9	996-0883E	000-Modifiedx

Table 3

IMPORTANT: When the Recall has been completed, locate the base completion label in the appropriate location on the vehicle, and attach the red completion sticker provided in the recall kit (Form WAR260). If the vehicle does not have a base completion label, clean a spot on the appropriate location of the vehicle and first attach the base completion label (Form WAR259). If a recall kit is not required or there is no completion sticker in the kit, write the recall number on a blank sticker and attach it to the base completion label.

Claims for Credit

You will be reimbursed for your parts, labor, and handling (landed cost for Export Distributors) by submitting your claim through the Warranty system within 30 days of completing this campaign. Please reference the following information in QuickClaim or OWL:

- Claim type is **Recall**.
- In the FTL Authorization field, enter the campaign number and appropriate condition code (e.g. **FL629A, FL629B, etc.**).
- In the Primary Failed Part Number field, enter **25-FL629-000**.
- In the Parts field:
  - For vehicles in FL629A, C, D, and F, a parts handling allowance of $165 per knuckle replaced may be claimed for parts ordered from **Table 1** (allowance will appear in Other Charges section).
  - For vehicles in FL629B and E, a parts handling allowance of $250 per knuckle replaced may be claimed for parts ordered from **Table 1** (allowance will appear in Other Charges section).
  - Enter the appropriate parts as shown in the Replacement Parts **Table 2**.
  - For all vehicles, up to 2 quarts of approved hub oil may be claimed without prior authorization.
  - For vehicles with hydraulic brakes, up to 1 quart of DOT 4 brake fluid may be claimed without prior authorization.

- In the Labor field, first enter the appropriate SRT from the Labor Allowance Table. For administrative time, enter SRT 939-0010A for 0.4 hours for RVs or 0.3 hours for all other vehicles.
- For OWL, the VMRS Component Code is 011-001-004 and the Cause Code is A1 - Campaign.
- **U.S. and Canada – Reimbursement for Prior Repairs.** When a customer asks about reimbursement, please do the following:
    - Accept the documentation of the previous repair.
    - Make a brief check of the customer's paperwork to see if the repair may be eligible for reimbursement. (See the "Copy of Owner Letter" section of this bulletin for reimbursement guidelines for this recall.)
    - Submit a Campaign Pre-Approval inquiry to the Warranty Campaigns Department for a decision and authorization number.
    - Include the approved amount on your claim in sublet/outside purchases.
    - In the claim story, first note the authorization number and that the claim includes a reimbursement request.
    - Retain the documentation and provide it to Warranty Campaigns or Claims Processing if requested.
    - When your claim is paid, reimburse the customer the appropriate amount.

IMPORTANT: ServicePro or OWL must be viewed prior to performing the recall to ensure the vehicle is involved and the campaign has not been previously completed. Also, check for a completion sticker prior to beginning work.

U.S. and Canadian dealers, contact the Warranty Campaigns Department from 7:00 a.m. to 4:00 p.m. Pacific Time, Monday through Friday, via Web inquiry at AccessFreightliner.com / Support / My Tickets and Submit an Inquiry, or the Customer Assistance Center at (800) 385-4357, after normal business hours, if you have any questions or need additional information. Export distributors, submit a Web inquiry or contact your International Service Manager.

U.S. and Canadian Dealers: To return excess kit inventory related to this campaign, U.S. dealers must submit a Parts Authorization Return (PAR) to the Memphis PDC. Canadian dealers must submit a PAR to their facing PDC. All kits must be in resalable condition. PAR requests must include the original purchase invoice number. Export Distributors: Excess inventory is not returnable.

The letter notifying U.S. and Canadian vehicle owners is included for your reference.

Please note that the National Traffic and Motor Vehicle Safety Act, as amended (Title 49, United States Code, Chapter 301), requires the owner's vehicle(s) be corrected within a reasonable time after parts are available to you. The Act states that failure to repair a vehicle within 60 days after tender for repair shall be prima facie evidence of an unreasonable time. However, circumstances of a particular situation may reduce the 60 day period. Failure to repair a vehicle within a reasonable time can result in either the obligation to (a) replace the vehicle with an identical or reasonably equivalent vehicle, without charge, or (b) refund the purchase price in full, less a reasonable allowance for depreciation. The Act further prohibits dealers from selling a vehicle unless all outstanding recalls are performed. Any lessor is required to send a copy of the recall notification to the lessee within 10 days. Any subsequent stage manufacturer is required to forward this notice to its distributors and retail outlets within five working days.

August 2012
FL629A-F
NHTSA #12V-266 (Non-School Buses)
NHTSA #12V-358 (School Buses)
Transport Canada #2012-193 (Non-School Buses)
Transport Canada #2012-228 (School Buses)

Copy of Notice to Owners

Subject: Detroit Axle Front Axle Knuckles

For the Notice to U.S. Customers: This notice is sent to you in accordance with the requirements of the National Traffic and Motor Vehicle Safety Act.

For the Notice to Canadian Customers: This notice is sent to you in accordance with the Canadian Motor Vehicle Safety Act.

Daimler Trucks North America LLC, on behalf of its Freightliner Trucks Division and its wholly owned subsidiary, Freightliner Custom Chassis Corporation, has decided that a defect which relates to motor vehicle safety exists on specific Freightliner Business Class M2, Cascadia, Columbia, and Coronado vehicles and Freightliner Custom Chassis XC chassis and B2 school bus chassis (Thomas Built Buses Saf-T-Liner C2) manufactured April 18, 2012, through April 30, 2012.

Certain Detroit Axle front axle knuckles may have a machining discrepancy in the wheel bearing area which could lead to shorter than expected bearing and knuckle life. In the worst case, the wheel could separate from the axle, possibly resulting in a vehicle crash causing property damage and/or personal injury.

The front axles knuckles will be inspected for improper machining. Knuckles not passing inspection will be replaced.

Please contact an authorized Daimler Trucks North America dealer to arrange to have the recall performed and to ensure that parts are available at the dealership. To locate an authorized dealer, search online at www.Daimler-TrucksNorthAmerica.com. The Recall will take approximately two to five hours depending on the repair needed and will be performed at no charge to you.

You may be liable for any progressive damage that results from your failure to complete the Recall within a reasonable time after receiving notification.

If you do not own the vehicle that corresponds to the identification number(s) which appears on the Recall Notification, please return the notification to the Warranty Campaigns Department with any information you can furnish that will assist us in locating the present owner. If you have leased this vehicle, Federal law requires that you forward this notice to the lessee within 10 days. If you are a subsequent stage manufacturer, Federal law requires that you forward this notice to your distributors and retail outlets within five working days. If you have paid to have this recall condition corrected prior to this notice, you may be eligible to receive reimbursement. Please see the reverse side of this notice for details.

For the Notice to U.S. Customers: If you have questions about this Recall, please contact the Warranty Campaigns Department at (800) 547-0712, 7:00 a.m. to 4:00 p.m. Pacific Time, Monday through Friday, e-mail address DTNA.Warranty.Campaigns@Daimler.com, or the Customer Assistance Center at (800) 385-4357 after normal business hours. If you are not able to have the defect remedied without charge and within a reasonable time, you may wish to submit a complaint to the Administrator, National Highway Traffic Safety Administration, 1200 New Jersey Avenue, SE., Washington, DC 20590; or call the Vehicle Safety Hotline at (888) 327-4236 (TTY: 800-424-9153); or to http://www.safercar.gov.

For the Notice to Canadian Customers: If you have questions about this Recall, please contact the Warranty Campaigns Department at (800) 547-0712, 7:00 a.m. to 4:00 p.m. Pacific Time, Monday through Friday, e-mail address DTNA.Warranty.Campaigns@Daimler.com, or the Customer Assistance Center at (800) 385-4357 after normal business hours.

We regret any inconvenience this action may cause but feel certain you understand our interest in motor vehicle safety.

WARRANTY CAMPAIGNS DEPARTMENT

Enclosure

August 2012
FL629A-F
NHTSA #12V-266 (Non-School Buses)
NHTSA #12V-358 (School Buses)
Transport Canada #2012-193 (Non-School Buses)
Transport Canada #2012-228 (School Buses)

Reimbursement to Customers for Repairs Performed Prior to Recall

If you have already **paid** to have this recall condition corrected you may be eligible to receive reimbursement.

Requests for reimbursement may include parts and labor. Reimbursement may be limited to the amount the repair would have cost if completed by an authorized Daimler Trucks North America LLC dealer. The following documentation must be presented to your dealer for consideration for reimbursement.

Please provide original or clear copies of all receipts, invoices, and repair orders that show

- The name and address of the person who paid for the repair
- The Vehicle Identification Number (VIN) of the vehicle that was repaired
- What problem occurred, what repair was done, when the repair was done
- Who repaired the vehicle
- The total cost of the repair expense that is being claimed
- Proof of payment for the repair (such as the front and back of a cancelled check or a credit card receipt)

Reimbursement will be made by check from your Daimler Trucks North America LLC dealer.

Please speak with your Daimler Trucks North America LLC authorized dealer concerning this matter.

Work Instructions

Subject: Detroit Axle Front Axle Knuckles

Models Affected: Specific Freightliner Business Class M2, Cascadia, Columbia and Coronado vehicles and Freightliner Custom Chassis XC chassis and B2 school bus chassis (Thomas Built Buses Saf-T-Liner C2), manufactured April 18, 2012, through April 30, 2012.

Parts Ordering Instructions:

Order parts in **Table 1** directly from Detroit Axle. Order parts in **Table 2** from your facing Parts Distribution Center.

To order parts in **Table 1**:

- Email Daniel Hannemann at daniel.hannemann@daimler.com.
- Carbon copy (cc) Alessandro Franceli at alessandro.franceli@daimler.com
- In the email subject line put "FL629 Knuckle Order"
- In the email body provide the following information:
  - Vehicle identification number
  - Affected knuckle (driver, passenger, or both)
  - Contact name, number, and email address of person at dealership receiving the parts
  - Dealer shipping address

Brake System Safety Precautions

General Safety Precautions

When working on or around a vehicle, observe the following precautions:

- If the vehicle is equipped with air brakes, make certain to drain the air pressure from all reservoirs before beginning any work on the vehicle. Depleting air system pressure may cause the vehicle to roll. Keep hands away from brake chamber pushrods and slack adjusters, which may apply as air pressure drops.
- Disconnect the batteries.
- Never connect or disconnect a hose or line containing compressed air. It may whip as air escapes. Never remove a component or pipe plug unless you are certain all system pressure has been released.
- Never exceed recommended air pressure. Always wear safety glasses when working with compressed air. Never look into air jets or direct them at anyone.
- Do not remove, disassemble, assemble, or install a component until you have read and understand the service procedures. Some components contain powerful springs, and injury can result if not properly disassembled. Use the correct tools and observe all precautions pertaining to use of those tools.
- Replacement hardware, tubing, hose, fittings, etc. should be the equivalent size, type, length, and strength of the original equipment.

- Make sure when replacing tubes or hoses that all of the original supports, clamps, or suspending devices are installed or replaced.
- Replace devices that have stripped threads or damaged parts. Repairs requiring machining should not be attempted.
- Prior to returning the vehicle to service, make certain all components and systems are restored to their proper operating condition.

Asbestos and Non-Asbestos Safety Precautions

⚠ WARNING

Wear a respirator at all times when servicing the brakes, starting with the removal of the wheels and continuing through assembly. Breathing brake lining dust (asbestos or non-asbestos) could cause lung cancer or lung disease. OSHA has set maximum levels of exposure and requires workers to wear an air purifying respirator approved by MSHA or NIOSH.

Because some brake linings contain asbestos, you should know the potential hazards of asbestos and the precautions to be taken. Exposure to airborne asbestos brake lining dust can cause serious and possibly fatal diseases such as asbestosis (a chronic lung disease) and cancer.

Because medical experts believe that long-term exposure to some *non-asbestos* fibers could also be a health hazard, the following precautions should also be observed if servicing non-asbestos brake linings.

Areas where brake work is done should be separate from other operations, if possible. As required by OHSA regulations, the entrance to the areas should have a sign displayed indicating the health hazard.

During brake servicing, an air purifying respirator with high-efficiency filters must be worn. The respirator and filter must be approved by MSHA or NIOSH, and worn during all procedures.

OSHA recommends that enclosed cylinders equipped with vacuums and high-efficiency (HEPA) filters be used during brake repairs. Under this system, the entire brake assembly is placed within the cylinder and the mechanic works on the brake through sleeves attached to the cylinder. Compressed air is blown into the cylinder to clean the assembly, and the dirty air is then removed from the cylinder by the vacuum.

If such an enclosed system is not available, the brake assembly must be cleaned in the open air. During disassembly, carefully place all parts on the floor to minimize creating airborne dust. Using an industrial vacuum cleaner with a HEPA filter system, remove dust from the brake drums, brake backing plates, and brake parts. After vacuuming, any remaining dust should be removed using a rag soaked in water and wrung until nearly dry. Do not use compressed air or dry brushing to clean the brake assembly.

If grinding or other machining of the brake linings is necessary, other precautions must be taken because exposure to asbestos dust is highest during such operations. In addition to the use of an approved respirator, there must be local exhaust ventilation such that worker exposure is kept as low as possible.

Work areas should be cleaned by industrial vacuums with HEPA filters or by wet wiping. Compressed air or dry sweeping should never be used for cleaning. Asbestos-containing waste, such as dirty rags, should be sealed, labeled, and disposed of as required by EPA and OSHA regulations. Respirators should be used when emptying vacuum cleaners and handling asbestos waste products.

Workers should wash before eating, drinking, or smoking, should shower after work, and should not wear work clothes home. Work clothes should be vacuumed after use and then laundered, without shaking, to prevent the release of asbestos fibers into the air.

Steering Knuckle Inspection

1. Check the base label (Form WAR259) for a completion sticker for FL629 (Form WAR260) indicating this work has been done. On trucks, the base label is usually located on the passenger-side door about 12 inches (30 cm) below the door latch. On motor homes, the base label is usually found on the front wall under the dash. On school buses, the base label is usually located above the driver's window. If a completion sticker is present, no work is needed. If there is no sticker, continue with the next step.
2. Park the vehicle on a level surface, shut down the engine, and set the parking brake. Chock the tires.
3. Raise the front of the vehicle and secure it on suitable jackstands.
4. For each front axle end, remove the front wheel and tire. See "Wheel and Tire Installation" on page 42 in these work instuctions.

⚠ WARNING

Before working on or around air brake systems and components, read and follow "Brake System Safety Precautions" at the beginning of these work instructions on page 8. Failure to do so may result in personal injury.

5. Remove the brake drum or disc, and the wheel hub. For instructions, see the "Hub Removal and Installation" for the specific brake type in these work instructions.
   - Drum Brake, Drum and Hub Removal and Installation - see page 15
   - Air Disc Brake, Disc and Hub Removal and Installation - see page 17
   - Hydraulic Disc Brake, Disc and Hub Removal and Installation - see page 20
6. Thoroughly clean the machined surfaces of the spindle.

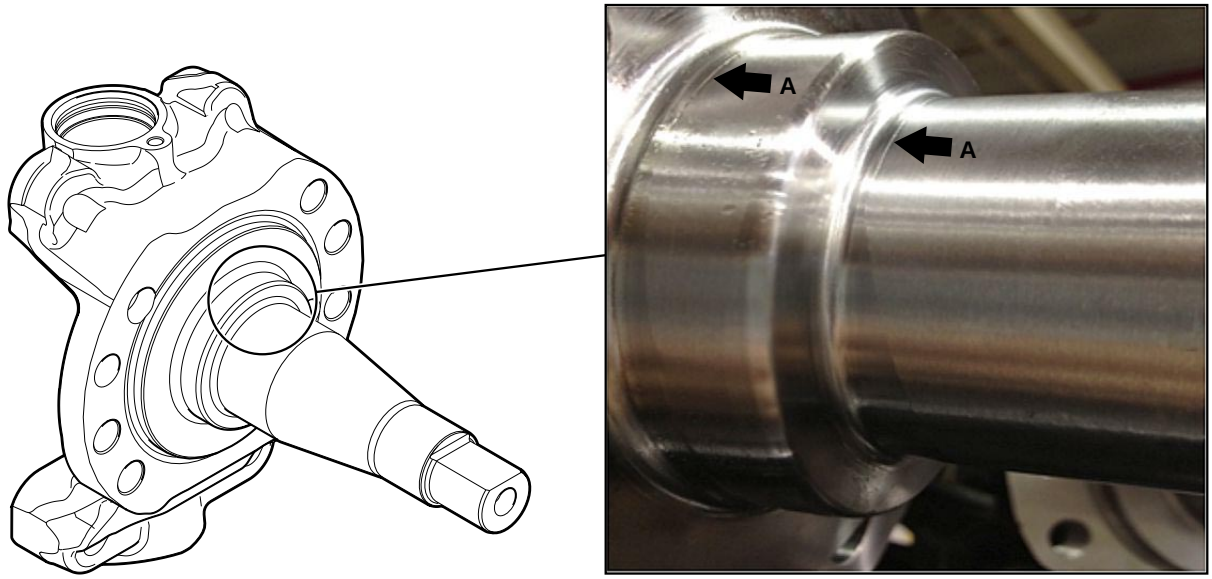

07/19/2012 f330274

Inspect the entire circumference of these two surfaces for a "rise" in the machining.

A. Machined Surfaces

Fig. 1, Inspecting the Steering Knuckle

7. Using a blade or putty knife, inspect the entire circumference of the machined surfaces of the inner wheel bearing race interface area and the seal contact surface area at the base of the spindle for a machining irregularity. See **Fig. 1**.

   If there **is any "rise"** before the radius at the base of the spindle, or on the seal contact surface, the knuckle is defective. Replace the knuckle. See "Steering Knuckle Replacement" below in these work instructions.

   NOTE: If a knuckle is affected by the recall, and the vehicle has over 5,000 miles, the wheel bearings must be replaced on the affected knuckle. Follow the instructions labeled "Wheel Bearing Cup Replacement" in these work instructions.

   If there **is no "rise"** before the radius at the base of the spindle, or on the seal surface, the knuckle is good. Install the removed components following all the instructions in the installation phase of the appropriate topics.

8. Clean a spot on the base label (Form WAR259). Write the campaign number, FL629, on a blank red completion sticker (Form WAR260) to indicate the work has been completed and attach it to the base label.

Steering Knuckle Replacement

NOTE: The following procedure assumes the wheels, brake drums or discs, and hubs are already removed for the knuckle inspection.

Refer to **Fig. 3** on page 12 for knuckle replacement.

Disassembly

1. Remove the ABS sensor and wiring from the brake spider and cut any zip ties that connect the harness to the brake components. Secure the sensor and the wiring out of the way. See **Fig. 2**.

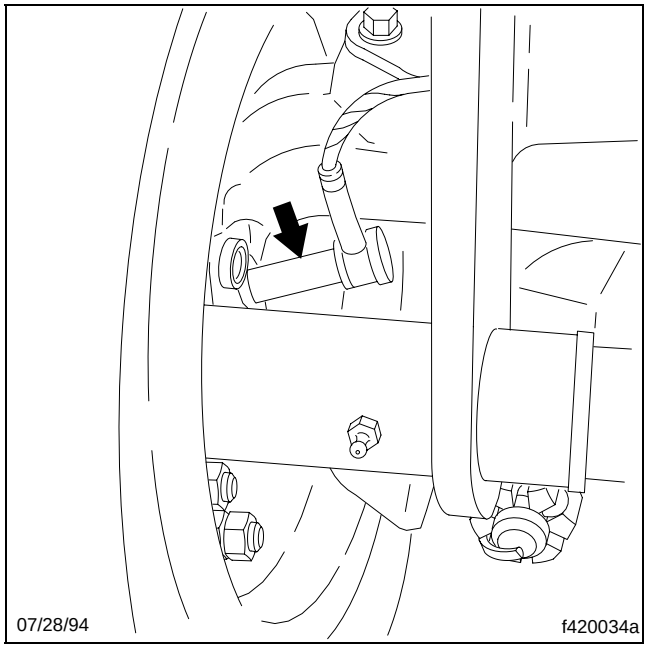

Fig. 2, Front Wheel Speed Sensor Removal (typical)

2. Disconnect the air line from the brake air chamber.

3. Remove the mounting capscrews attaching the brake spider to the steering knuckle, and remove the brake spider, with any attached components from the axle flange as an assembly.

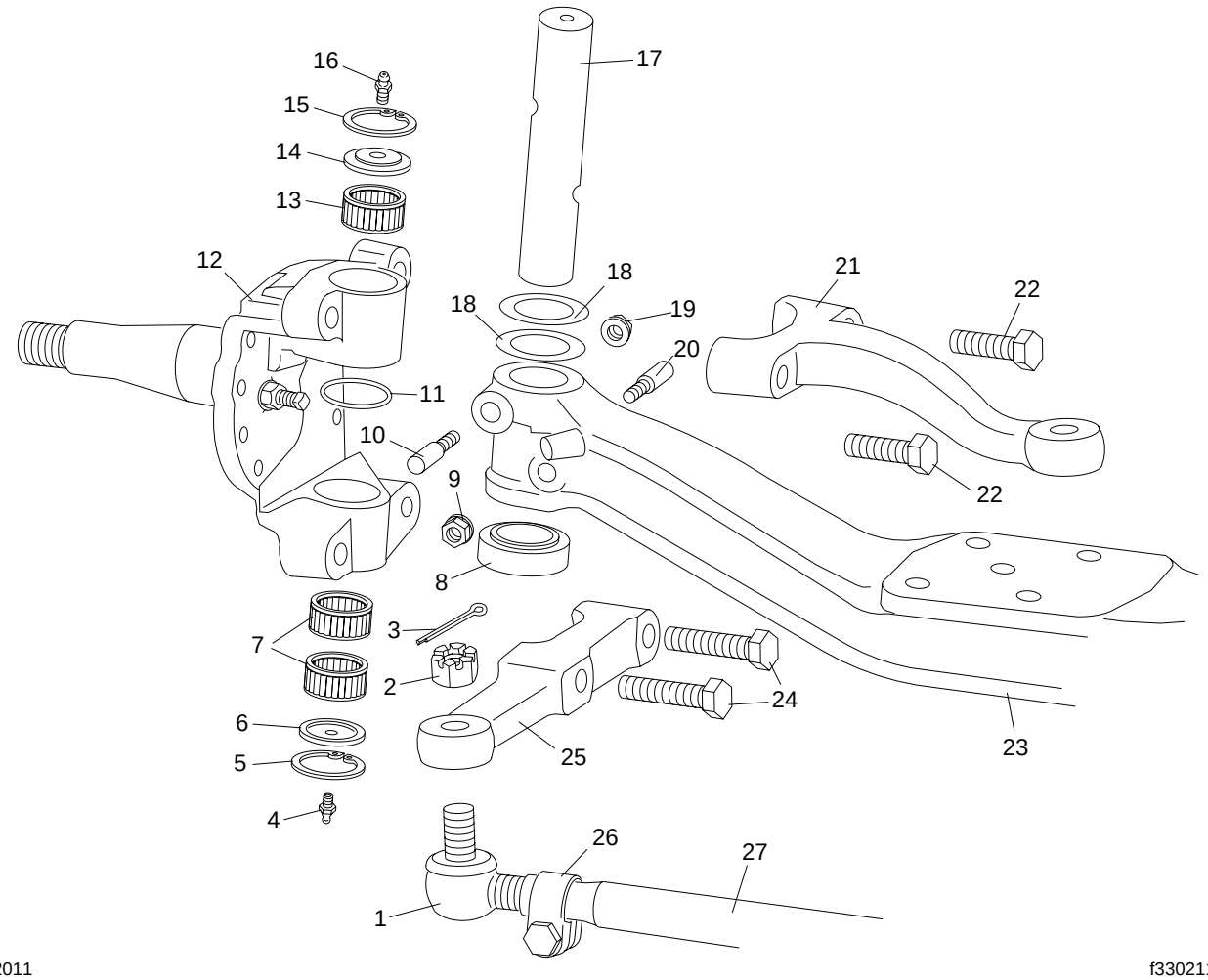

06/08/2011 f330211a

NOTE: The number of upper and lower needle bearing sets may vary, depending on the axle model.

1. Tie-Rod Ball Joint
2. Castle Nut
3. Cotter Pin
4. Lower Grease Fitting
5. Lower Snap Ring
6. Lower Cover Plate & O-Ring
7. Lower Needle Bearings (may be one or two sets)
8. Thrust Friction Bearing (thrust roller bearing on the passenger side)
9. Lower Draw Key Nut
10. Upper Draw Key
11. Grease Seal
12. Steering Knuckle
13. Upper Needle Bearing (may be one or two sets)
14. Upper Cover Plate & O-Ring
15. Upper Snap Ring
16. Upper Grease Fitting
17. Kingpin
18. Shim
19. Upper Draw Key Nut
20. Lower Draw Key
21. Steering Arm
22. Steering Arm Capscrew
23. Axle Beam
24. Tie-Rod Arm Capscrews
25. Tie-Rod Arm
26. Tie-Rod Clamp
27. Tie-Rod Tube

Fig. 3, Front Axle Components (typical, driver side shown)

NOTE: On the driver side of the vehicle, the steering arm connects to the steering knuckle. On the passenger side, no steering arm is present.

4. Disconnect the drag link from the steering arm, if present.
5. Disconnect the tie rod from the tie-rod arm.
6. Remove the tie-rod arm from the steering knuckle.

IMPORTANT: The steering arm capscrews are 0.39 inch (10 mm) shorter than the tie-rod arm capscrews. Note the corresponding lengths for correct component installation.

7. If applicable, remove the steering arm.
8. Remove the steering knuckle and spindle assembly from the axle beam.
   - 8.1 Remove the upper and lower snap rings that hold the cover plates in place.
   - 8.2 Remove the upper and lower cover plates from the steering knuckle.
   - 8.3 Note the orientation of the draw keys and the kingpin, then remove the draw keys and nuts that hold the kingpin in place.
   - 8.4 Using a brass drift, remove the kingpin by driving it downward. Make a note of where the needle bearings were installed.
   - 8.5 Remove the spacer(s) from the upper surface of the axle beam bore.

   NOTE: The steering knuckle on the passenger side (side without a steering arm) has a thrust roller bearing instead of a thrust friction bearing. Unlike the thrust friction bearing, the thrust roller bearing has no protruding lip at the top. When removing the thrust roller bearing from the axle beam bore, it is not necessary to push down on the steering knuckle.

   - 8.6 Push down on the steering knuckle and spindle assembly to clear the lip on the thrust friction bearing and remove the assembly from the axle beam bore.
9. Remove the grease seal from the upper steering-knuckle bore.
10. Remove the thrust friction bearing (driver side) or the thrust roller bearing (passenger side) from the top of the lower steering knuckle bore.

NOTE: If removing the thrust friction bearing (driver side), note the orientation of the bearing for future reference.

11. Using a suitable bushing driver, drive out the needle bearings from the steering knuckle bores.
12. Remove the steering-knuckle from the axle.

Assembly

NOTE: If the vehicle has over 5,000 miles, the wheel bearings must also be replaced on the new knuckle.

1. Clean the new steering knuckle bores and the axle beam bores. Check for damage such as grooves, scratches, and pitting.

   If any bores show significant damage, replace the component.
2. Install the grease seal—with the grooved side down (toward the road)—into the top of the upper steering knuckle bore. Carefully drive the seal down into the bore until the outer edge of the seal is flush with the bottom edge of the bore. Make sure the seal is not cocked.

NOTE: The thrust friction bearing has a protruding lip at the top. The thrust roller bearing does not.

3. Install the new thrust friction bearing (driver side) or thrust roller bearing (passenger side) into the top of the lower steering knuckle bore. Install the thrust friction bearing (or thrust roller bearing) with the sealed side up.

4. Partially install the new steering knuckle onto the axle beam.

   4.1 Making sure the flats on the kingpin are aligned with the draw-key holes in the axle beam, put the kingpin into the top bore of the steering knuckle. Note that the top of the kingpin is clearly marked. Push the kingpin through the axle beam bore until the upper end of the kingpin is flush with the upper surface of the axle beam bore.

   4.2 Align the steering knuckle with the axle beam, then check the clearance between the axle beam bore and the upper steering knuckle bore. Clearance is to be a maximum of 0.007 inch (0.18 mm).

   IMPORTANT: To correctly check the clearance, the thrust friction or thrust roller bearing must be installed correctly, and upward pressure must be applied to the steering knuckle.

   4.3 If needed, install sufficient spacers to reduce the clearance to a maximum of 0.007 inch (0.18 mm).

5. Install the kingpin fully into the steering knuckle bores, ensuring that the flats on the kingpin are still aligned with the draw-key holes in the axle beam, and that the top of the kingpin (marked "Top") is properly positioned.

IMPORTANT: Make sure the new draw keys are the same length as those removed. On some axle models the lower draw key is longer than the upper one.

6. Install the new upper and lower draw keys and nuts.

   IMPORTANT: Incorrect installation of the draw keys could cause interference with the steering stop bolt.

   6.1 Install the upper draw key from the back of the axle, and the lower one from the front of the axle.

   6.2 Tighten the draw-key nuts 30 to 55 lbf·ft (40 to 75 N·m).

7. Install the grease fittings and the new cover plates.

   7.1 Install the new upper cover plate and the snap ring. Install the grease fitting into the cover plate.

   7.2 Install the new lower cover plate and the snap ring. Install the grease fitting into the cover plate.

IMPORTANT: The steering arm capscrews are 0.39 inch (10 mm) shorter than the tie-rod arm capscrews, make sure to install correct capscrew in the correct positions.

8. If applicable, install the steering arm. Apply Loctite® 277 to the threads and tighten the steering arm capscrews. If M20 capscrews are used, tighten them 425 lbf·ft (575 N·m). If M24 capscrews are used, tighten them 664 lbf·ft (900 N·m).

9. Install the tie-rod arm. Apply Loctite® 277 to the threads and tighten the tie-rod arm:

   If M20 capscrews are used, tighten them 425 lbf·ft (575 N·m). If M24 capscrews are used, tighten them 664 lbf·ft (900 N·m).

10. Attach the tie-rod arm to the tie rod. Tighten the castle nut 120 to 170 lbf·ft (163 to 230 N·m) plus a maximum of one-sixth of a turn to align a slot in the castle nut with the cotter pin hole in the tie rod stud. Insert the cotter pin and bend the tangs to secure it.

11. If removed, connect the drag link to the steering arm.

12. Install the brake spider and brake assembly on the axle flange.

    Place the assembly on the axle flange. Install the mounting fasteners with hardened washers under the bolt head and nut. See **Fig. 2**. Tighten the capscrews in a cross pattern to the specifications in **Table 4**.

Brake Spider Fastener Torque Specifications	
Size	**Torque: lbf·ft (N·m)**
7/16–20	60–75 (81–102)
1/2–20	85–115 (115–156)
9/16–18	135–165 (183–224)
5/8–18	180–230 (244–312)

Table 4, Brake Spider Fastener Torque Specifications

13. Connect the air line to the brake chamber. Tighten the fitting 30 lbf·ft (41 N·m).

NOTE: If the vehicle has over 5,000 miles, the wheel bearings must also be replaced on the new knuckle. For instructions, see the "Wheel Bearing Cup Replacement" on page 40 in these work instructions.

14. Install the hub, drum, and wheel assembly, and adjust the wheel bearings. For instructions, see the "Hub Removal and Installation" for the specific brake type in these work instructions.
    - Drum Brake, Drum and Hub Removal and Installation - see page 15
    - Air Disc Brake, Disc and Hub Removal and Installation - see page 17
    - Hydraulic Disc Brake, Disc and Hub Removal and Installation - see page 20
15. Install the ABS sensor as follows.

    15.1 Press the clamping bushing into the brake spider hole until it stops.

    15.2 Coat the sensor with Mobil HP, Valvoline EP 633, Pennzoil 707L, or an equivalent.

    15.3 Press the sensor into the clamping bushing until it is stopped by the tone wheel.

    15.4 Secure the wiring harness with zip ties.
16. Raise the vehicle, remove the safety stands, then lower the vehicle.
17. Clean a spot on the base label (Form WAR259). Write the campaign number, FL629, on a blank red completion sticker (Form WAR260) to indicate the work has been completed and attach it to the base label.

Drum Brake, Drum and Hub Removal and Installation

Removal

For a typical drum brake wheel end and axle assembly, see **Fig. 4**.

1. Back off the brake shoes, if needed.
2. Remove the brake drum.
3. Drain the oil from the hub into a clean container.
4. Remove the hub cap.

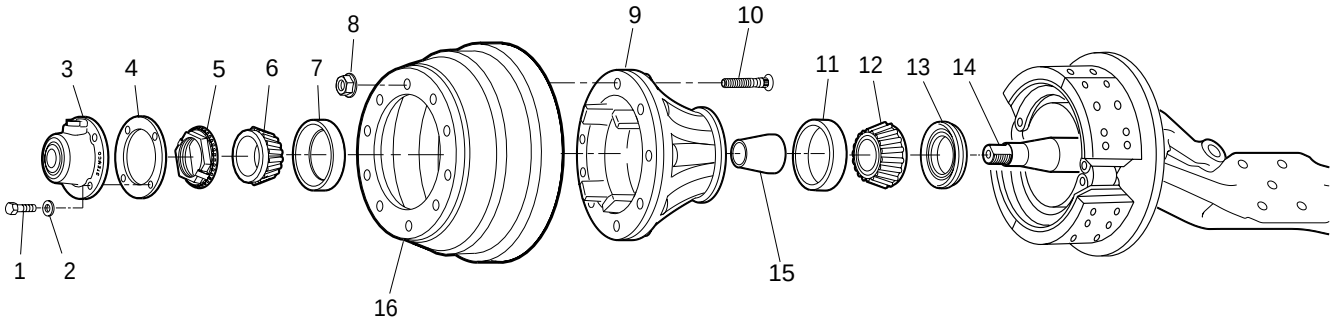

1. Hub Cap Capscrew
2. Washer
3. Hub Cap
4. Gasket
5. Axilok Nut
6. Outer Wheel Bearing
7. Outer Wheel Bearing Cup
8. Wheel Nut
9. Hub
10. Wheel Stud
11. Inner Wheel Bearing Cup
12. Inner Wheel Bearing
13. Oil Seal
14. Axle Spindle
15. Bearing Spacer
16. Brake Drum

Fig. 4, Typical Wheel End Assembly, Front Axle with Drum Brakes

NOTICE

Improper removal or installation of spindle nuts can damage the locking mechanism of the nut. Damaged locking mechanisms can not be repaired, and the nut must be replaced.

5. Remove the spindle nut. For instructions, refer to the "Removal and Installation" for the type of spindle nut used on the vehicle being serviced in these work instructions.
   - ProTorq Spindle Nut Removal and Installation - see page 28
   - Axiloc Spindle Nut Removal and Installation - see page 33
   - Four-Piece Wheel Bearing Lock System Removal and Installation - see page 37
6. Remove the hub.

Installation

NOTE: If the vehicle has over 5,000 miles, the wheel bearings must also be replaced on the new knuckle. For instructions, see the "Wheel Bearing Cup Replacement" on page 40 in these work instructions.

1. Install the inner wheel bearing.
2. Install a new seal in the hub.
3. Install the hub.
4. Install the outer wheel bearing.

NOTICE

Improper removal or installation of spindle nuts can damage the locking mechanism of the nut. Damaged locking mechanisms can not be repaired, and the nut must be replaced.

5. Install the spindle nut.
6. Using a new gasket, install the hub cap.

7. Fill the hub with new oil.
8. Install the drum.
9. Adjust the brakes if needed.
10. Install the wheel and tire. Refer to "Wheel and Tire Installation" on page 42 in these work instructions.

Air Disc Brake, Disc and Hub Removal and Installation

Removal

For typical air disc brake wheel end and axle assembly, see **Fig. 5**.

1. Remove the caliper. See "Air Disc Brake Caliper Removal and Installation" on page 22 in these work instructions.

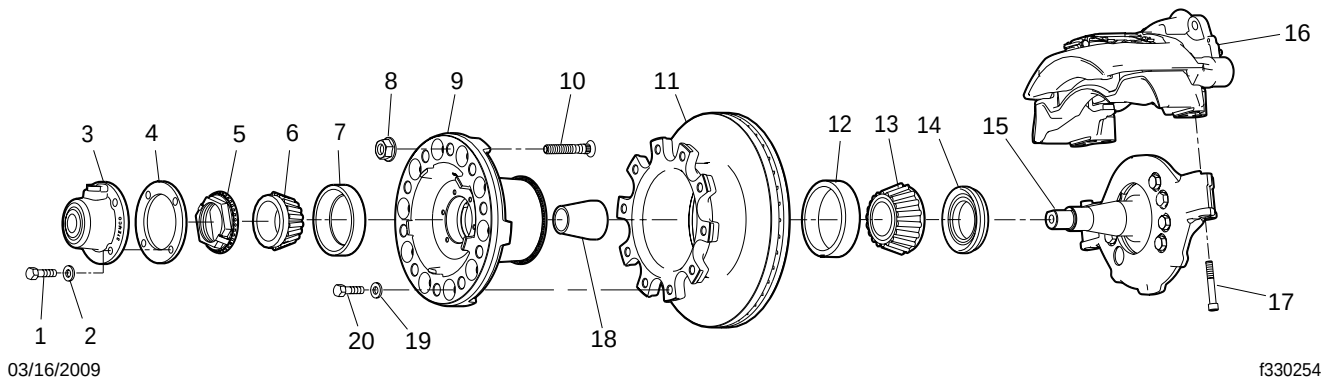

1. Hub Cap Capscrew
2. Washer
3. Hub Cap
4. Gasket
5. Axilok Nut
6. Outer Wheel Bearing
7. Outer Wheel Bearing Cup
8. Wheel Nut
9. Hub
10. Wheel Stud
11. Brake Rotor
12. Inner Wheel Bearing Cup
13. Inner Wheel Bearing
14. Oil Seal
15. Axle Spindle
16. Brake Caliper
17. Calliper Mounting Capscrew
18. Bearing Spacer
19. Washer
20. Capscrew

Fig. 5, Typical Wheel End Assembly, Front Axle with Disc Brakes

2. Drain the oil from the hub into a clean container.
3. Remove the hub cap.

NOTICE

Improper removal or installation of spindle nuts can damage the locking mechanism of the nut. Damaged locking mechanisms can not be repaired, and the nut must be replaced.

4. Remove the spindle nut. For instructions, refer to the "Removal and Installation" for the type of spindle nut used on the vehicle being serviced in these work instructions.
   - ProTorq Spindle Nut Removal and Installation - see page 28
   - Axiloc Spindle Nut Removal and Installation - see page 33
   - Four-Piece Wheel Bearing Lock System Removal and Installation - see page 37
5. Using an appropriate lifting device, remove the hub and rotor assembly.

Installation

NOTE: If the vehicle has over 5,000 miles, the wheel bearings must also be replaced on the new knuckle. For instructions, see the "Wheel Bearing Cup Replacement" on page 40 in these work instructions.

1. Install the inner wheel bearing.
2. Install a new seal in the hub.
3. Using an appropriate lifting device, position the hub and rotor assembly on the spindle.
4. Install the outer wheel bearing.

NOTICE

Improper removal or installation of spindle nuts can damage the locking mechanism of the nut. Damaged locking mechanisms can not be repaired, and the nut must be replaced.

5. Install the spindle nut.
6. Using a new gasket, install the hub cap.
7. Fill the hub with new oil.
8. Install the caliper.
9. Install the wheel and tire. See "Wheel and Tire Installation" on page 42 in these work instructions.

Air Disc Brake Caliper Removal and Installation

NOTE: Replacement bolts are not supplied with the caliper, use only bolts of a grade and type specified by Daimler Trucks North America.

Refer to **Fig. 6** for front caliper/carrier removal and installation.

Front Caliper/Carrier Assembly Removal

1. Cut the zip ties holding the ABS harness to the brake hose as needed.

NOTE: If you are not replacing the caliper, it is not necessary to disconnect the air hose, if it can be safely supported out of the way.

2. With the caliper/carrier assembly securely supported, remove and discard the six bolts attaching the carrier to the anchor plate. Secure the caliper/carrier assembly out of the way.

Front Caliper/Carrier Assembly Installation

1. Position the carrier/caliper assembly, and attach it to the anchor plate with new bolts. Tighten 170 to 200 lbf·ft (230 to 271 N·m).
2. Install the brake pads, and brake pad shield, if equipped.
3. Position the ABS harness, and install new zip ties to hold the harness to the brake hose. Leave room for movement.

⚠ WARNING

Do not operate the vehicle until the brakes have been adjusted and checked for proper operation. To do so could result in inadequate or no braking ability, which could cause personal injury or death, and property damage.

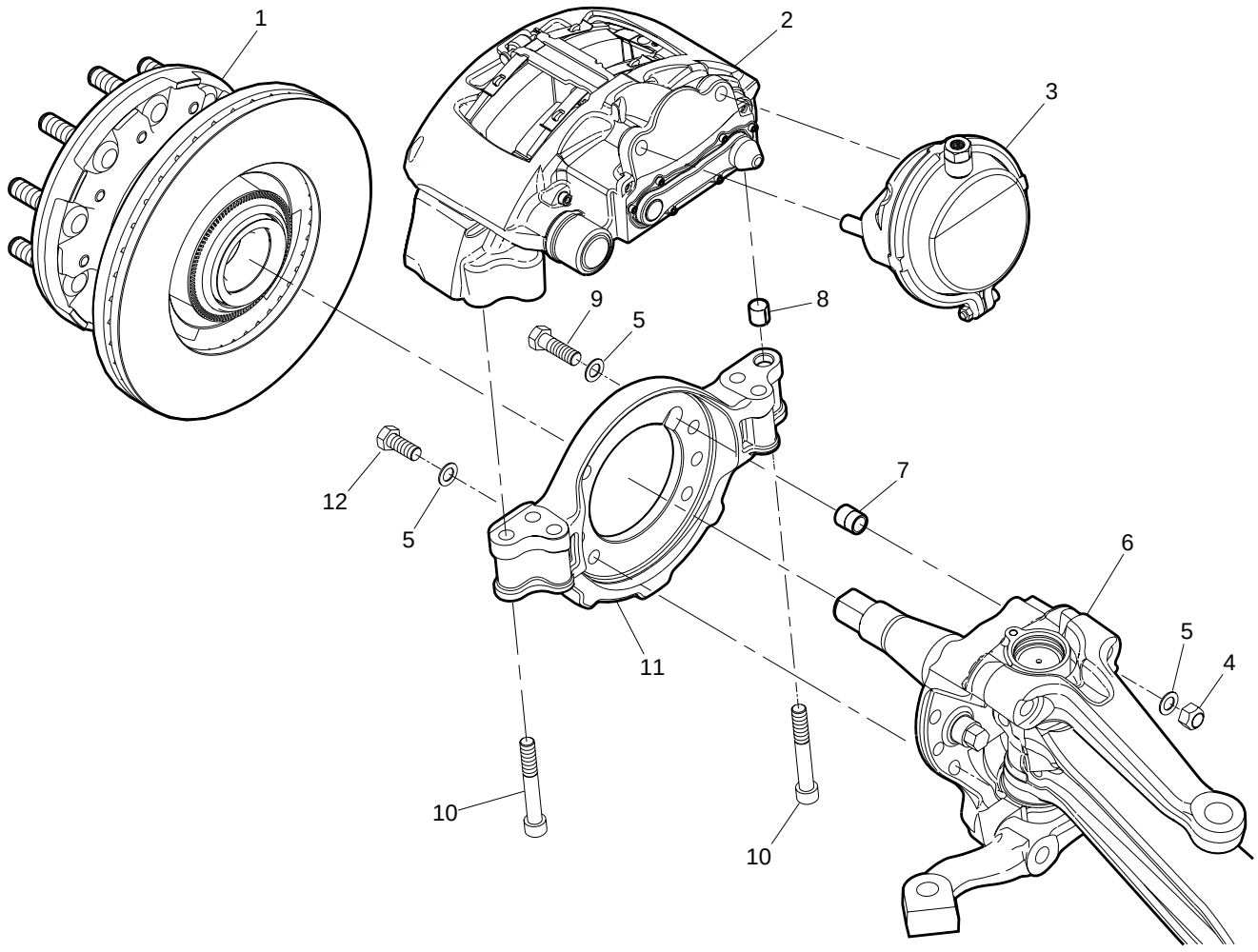

1. Hub and Disc Assembly
2. Caliper/Carrier Assembly
3. Brake Chamber
4. Nut
5. Washer
6. Spindle Assembly
7. ABS Sensor Bushing
8. Carrier Guide Bushing
9. Anchor Plate Bolt
10. Caliper Mounting Capscrew
11. Anchor Plate
12. Anchor Plate Capscrew

Fig. 6, Front Caliper and Carrier Assembly Installation

4. In a safe area, check for proper brake operation, as follows, before you put the vehicle in service.

   4.1 Apply and release the brakes several times to check for air leaks and proper operation.

   4.2 Perform six low-speed stops to ensure proper parts replacement and full vehicle control.

   4.3 Immediately after doing the above stops, check the rotor temperatures. Any rotors that are significantly cooler than others show a lack of braking effort on those wheels.

Hydraulic Disc Brake, Disc and Hub Removal and Installation

Removal

IMPORTANT: It is not necessary to disconnect the brake fluid line for this procedure. If the brake line is disconnected, the system will need to be bled.

1. Remove the caliper, and secure it in a safe place. See "Hydraulic Disc Brakes, Caliper Removal and Installation" on page 21 in these work instructions.
2. Drain the oil from the hub into a clean container.
3. Remove the hub cap.

NOTICE

Improper removal or installation of spindle nuts can damage the locking mechanism of the nut. Damaged locking mechanisms can not be repaired, and the nut must be replaced.

4. Remove the spindle nut. For instructions, refer to the "Removal and Installation" for the type of spindle nut used on the vehicle being serviced in these work instructions.
   - ProTorq Spindle Nut Removal and Installation - see page 28
   - Axiloc Spindle Nut Removal and Installation - see page 33
   - Four-Piece Wheel Bearing Lock System Removal and Installation - see page 37
5. Using an appropriate lifting device, remove the hub and rotor assembly.

Installation

NOTE: NOTE: If the vehicle has over 5,000 miles, the wheel bearings must also be replaced on the new knuckle. For instructions, see the "Wheel Bearing Cup Replacement" on page 40 in these work instructions.

1. Install the inner wheel bearing.
2. Install a new seal in the hub.
3. Using the wheel jack, position the assembly on the spindle.
4. Install the outer wheel bearing.

NOTICE

Improper removal or installation of spindle nuts can damage the locking mechanism of the nut. Damaged locking mechanisms can not be repaired, and the nut must be replaced.

5. Install the spindle nut.
6. Using a new gasket, install the hub cap.
7. Fill the hub with new oil.
8. Install the caliper. See "Hydraulic Disc Brakes, Caliper Removal and Installation" on page 21 in these work instructions.
9. Install the wheel and tire. See "Wheel and Tire Installation" on page 42 in these work instructions.

Hydraulic Disc Brakes, Caliper Removal and Installation

Removal

1. Remove half the fluid from the front section of the brake reservoir. Removing the fluid from the reservoir keeps the reservoir from overflowing when retracting the pistons into the caliper.
2. Remove the brake line retaining clip from its support mounting. This will allow the brake line hose to hang free. See **Fig. 7**.
3. Remove the upper (top) guide pin mounting bolt. See **Fig. 7**.

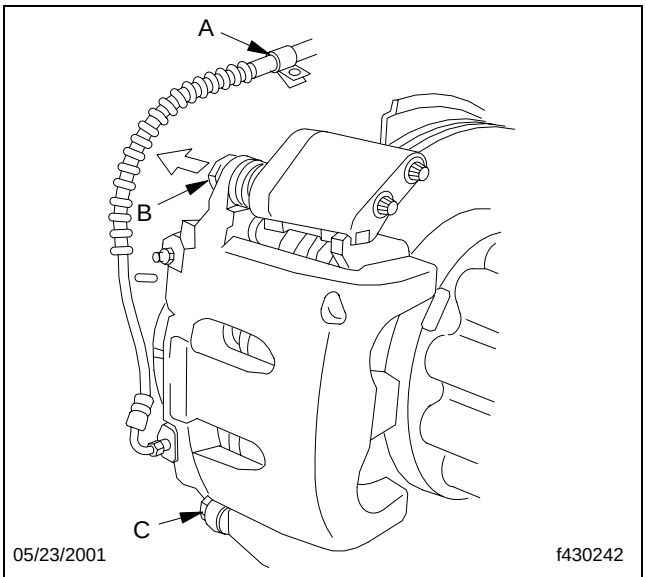

A. Make sure this clip is detached from the support bracket.
B. Remove the upper guide pin mounting bolt.
C. Do not loosen the lower guide pin mounting bolt.

Fig. 7, Upper Pin Mounting Bolt Removal

NOTICE

Do not pull on the guide pins. This may dislodge the guide pin boot from the guide pin or anchor plate grooves, which could damage the guide pin boot.

4. Swing the caliper assembly away from the rotor by carefully rotating the caliper on the lower pin mounting bolt and guide pin. See **Fig. 8**. Do not allow the brake line hose to become pinched or kinked.

IMPORTANT: In most cases, it is not necessary to disconnect the brake fluid line for this procedure. If the brake line is disconnected, the system will need to be bled.

5. If necessary, disconnect the brake fluid line from the caliper. See **Fig. 9**.
6. Remove the lower guide pin mounting bolt and remove the caliper from the anchor plate. Secure the caliper where it will not damage the brake line.

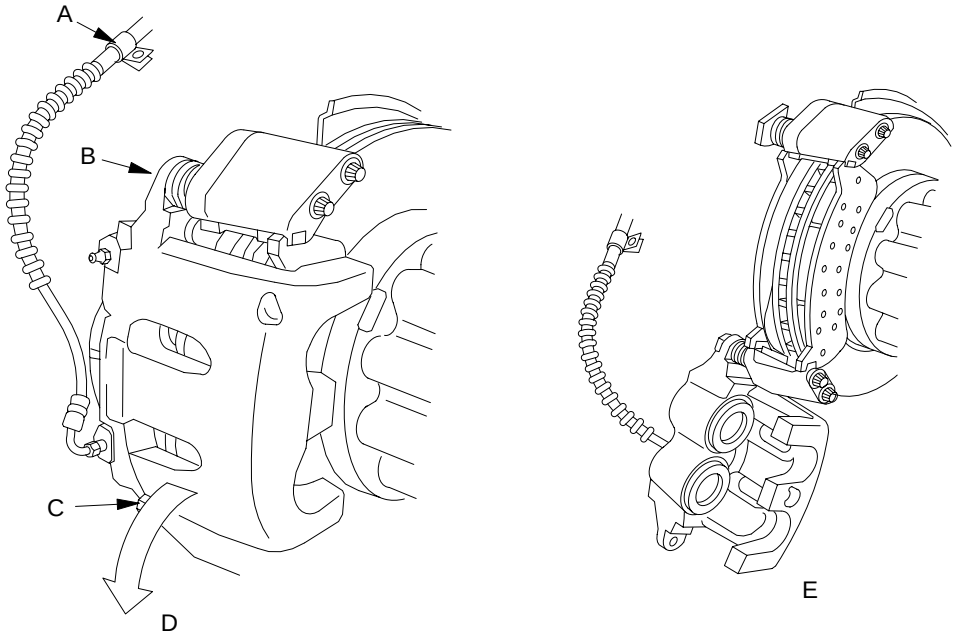

05/24/2001 f430244

A. Make sure this clip is detached from the support bracket.
B. Guide pin bolt has been removed.
C. Lower Guide Pin Bolt
D. Swing the caliper down until it stops.
E. Caliper in the lowered position.

Fig. 8, Rotating the Caliper Away from the Rotor

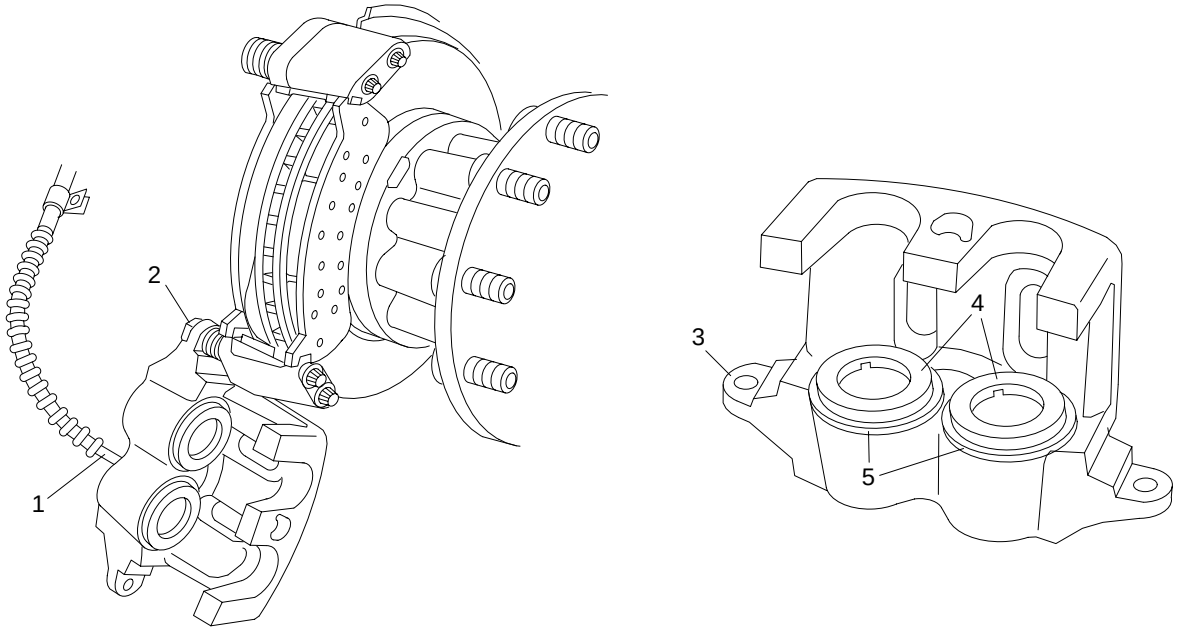

05/29/2001 f430249

1. Brake Line
2. Lower Guide Pin Bolt
3. Machined Face
4. Pistons
5. Piston Boots

Fig. 9, Caliper Removal from Anchor Plate

Installation

NOTE: Use isopropyl alcohol to clean brake seals, boots, and pistons. Do not soak components for an extended period of time.

1. Clean contamination, dirt, and debris from the exterior of the caliper, machined faces, and around the caliper piston boots.
2. Visually inspect the caliper for brake fluid leakage or damage to pistons or piston boots. If there is leakage or damage, the caliper should be repaired or replaced.
3. Make sure the pistons are fully retracted into the caliper. Piston boots must be fully seated in the piston boot groove and the boot grooves in the caliper face.
4. Position the caliper on the anchor plate with the caliper lower guide pin boss hole aligned with the threaded hole in the lower guide pin head. Hand-thread the pin mounting bolt through the caliper and into the anchor plate.

NOTICE

Use care when positioning the caliper over the disc brake pads, rotor, and upper guide pin head to avoid tearing, cutting, or dislodging the piston boots or guide pin boot.

5. Carefully rotate the caliper closed about the lower pin mounting bolt and guide pin. Do not allow the brake line hose to become pinched or kinked. Align the flat on the upper guide pin head with the flat on the caliper upper guide pin boss. See **Fig. 10**.

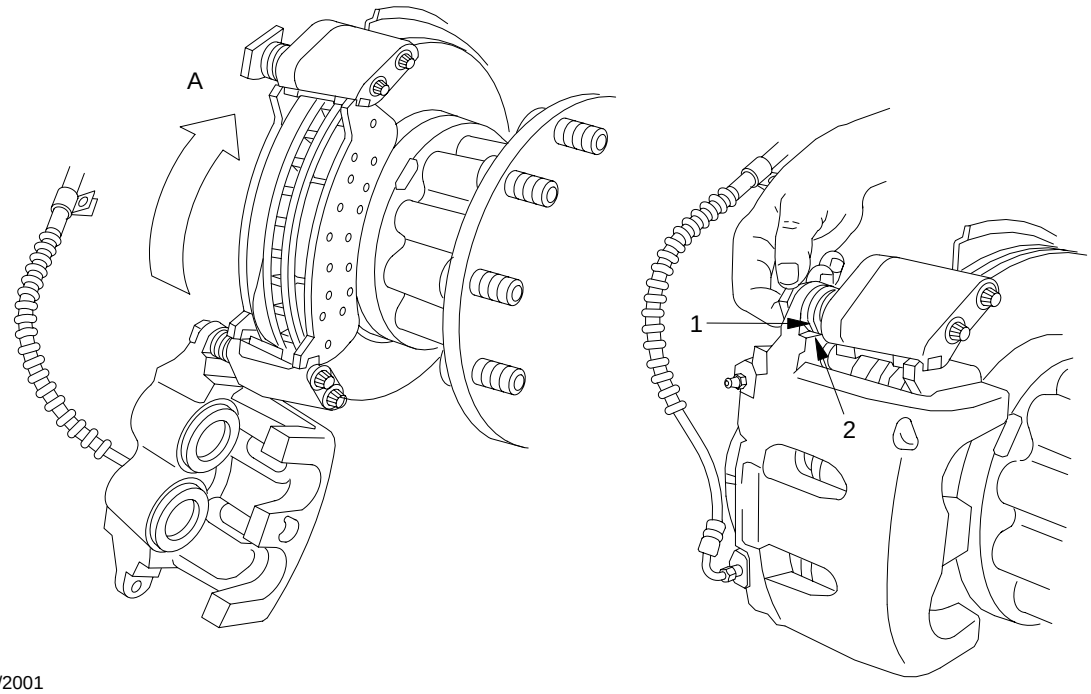

05/24/2001 f430243

A. Swing the caliper up into position.

1. Flat on Guide Pin
2. Flat on Caliper

Fig. 10, Rotating the Caliper Over the Brake Pads and Rotor

6. Hold the caliper in the closed position with the caliper upper guide pin boss hole aligned with the threaded hole in the upper guide pin head. Hand-thread the upper pin mounting bolt.

NOTICE

Always tighten caliper pin mounting bolts in the proper sequence. Do not overtighten caliper pin mounting bolts. Increased brake drag may result from incorrect tightening.

IMPORTANT: See **Fig. 11** and **Fig. 12** before tightening either the upper or lower mounting bolt.

7. Tighten the bolts 93 to 107 lbf·ft (126 to 145 N·m) in the sequence shown in **Fig. 11** and **Fig. 12**.

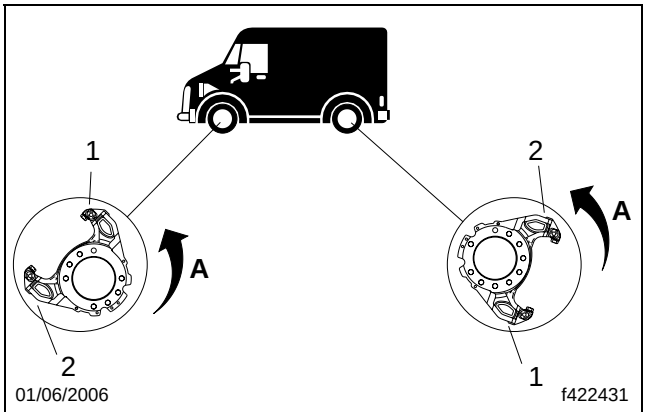

A. Direction of Rotation (forward motion)

1. Tighten First 2. Tighten Second

Fig. 11, Tightening Sequence for Caliper Mounting Bolts, Left Side

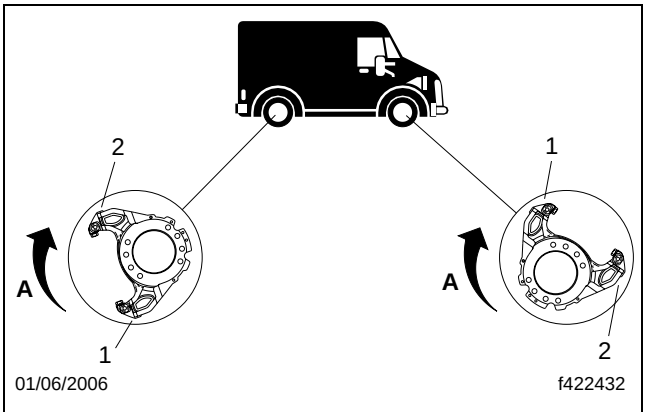

A. Direction of Rotation (forward motion)

1. Tighten First 2. Tighten Second

Fig. 12, Tightening Sequence for Caliper Mounting Bolts, Right Side

8. Install the previously removed brake line retaining clip. Make sure the brake line hose is not pinched or kinked.
9. If the brake supply hose was disconnected, connect it.
   - 9.1 Tighten the brake supply hose fitting 15 lbf·ft (20 N·m).
   - 9.2 If the brake supply hose was disconnected, bleed the brake supply line to the caliper, following the instructions in "Hydraulic Brake System Bleeding" in these work instructions. If you have removed more than one brake caliper, bleed the entire brake system.
10. Check the uid level in the master cylinder reservoir and add the necessary amount of new DOT 4 approved brake fluid.

⚠ WARNING

Do not move the vehicle until the brake pedal feels firm. To do otherwise could result in loss of vehicle control, causing an accident resulting in personal injury or property damage.

11. Seat the brake pads by pressing firmly on the brake pedal several times.

    If new brake pads were installed, road test the vehicle to seat the brake pads.

    - 11.1 Accelerate the vehicle to 30 mph (48 km/h), then brake to a stop, using medium brake pedal pressure. *Do not slam on the brakes.*
    - 11.2 Repeat this step 4 or 5 times, allowing a 1-minute interval between brake applications.

Hydraulic Brake System Bleeding

Whenever any hydraulic system fitting is loosened or disconnected, the entire system must be bled to remove any air that may have entered it.

NOTICE

Power steering fluid and brake fluid are incompatible. Never mix these two fluids or serious damage to both hydraulic systems will result. Use only brake fluid for the master cylinder and brake lines. Use only power steering fluid for the power booster.

Always use new, clean brake fluid that meets DOT 4 specifications when bleeding the master cylinder and service brake system. Never reuse brake fluid and do not use brake fluid containers for any other purpose. Keep brake fluid containers tightly closed to keep new brake fluid clean and dry.

IMPORTANT: Do not let brake fluid touch any painted surfaces, as it will remove the paint. Brake fluid may also damage certain non-metal surfaces. Do not let it get on brake pads or rotors.

Pressure Bleeding

NOTE: Pressure bleeding is the preferred method for bleeding the service brake system. It requires the use of a special pressure bleeder kit, consisting of a tank, pressure pump and valve, gauge, tubing and adapter. These are available from a number of manufacturers and include instructions for use. See **Fig. 13**.

1. Open the hood.
2. Connect the pressure bleeder to the brake master cylinder reservoir following the manufacturer’s instructions.
   - 2.1 Fill the pressure bleeder with new DOT 4 approved brake uid. Pressurize it according to the manufacturer's instructions.
   - 2.2 Using the supplied adapter, connect the pressure bleeder to the rear compartment of the master cylinder reservoir.
3. Bleed the hydraulic connections at the rear wheel calipers starting on the right side.
   - 3.1 Put a wrench on the bleeder fitting at the caliper. Attach a length of clear tubing to the bleeder fitting. Make sure the tube fits snugly. Submerge the tubing in a container of clean brake fluid. See **Fig. 14**.
   - 3.2 Loosen the bleeder fitting about 3/4 turn and let the brake fluid flow out of the fitting until it is free of air bubbles. Tighten the fitting firmly.
   - 3.3 Move to the left rear caliper and repeat steps for bleeding the caliper.
4. Disconnect the pressure bleeder from the rear compartment of the master cylinder reservoir. Connect it to the front compartment of the reservoir.
5. Bleed the front wheel brake calipers starting at the right side.
   - 5.1 Put a wrench on the bleeder fitting at the caliper. Attach a length of clear tubing to the bleeder fitting. Make sure the tube fits snugly. Submerge the tubing in a container of clean brake fluid. See **Fig. 14**.
   - 5.2 Loosen the bleeder fitting about 3/4 turn and let the brake fluid flow out of the fitting until it is free of air bubbles. Tighten the fitting firmly.
   - 5.3 Move to the left front wheel caliper and repeat steps for bleeding the caliper.
6. Check the brake uid level in both compartments of the reservoir. Add new DOT 4 approved brake uid if needed.
7. Check the operation of the brakes by depressing the brake pedal several times, until if feels firm. The brake pedal should not go all the way down to the floor. If it does, troubleshoot the brake system and correct the problem.

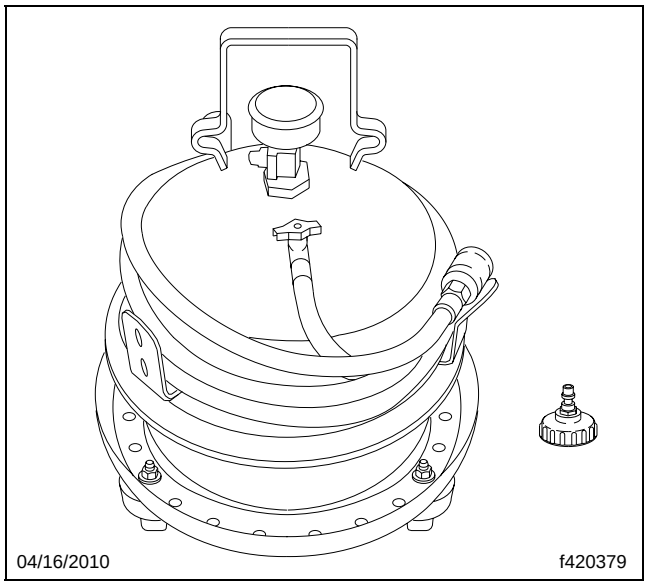

Fig. 13, Pressure Bleeder Kit

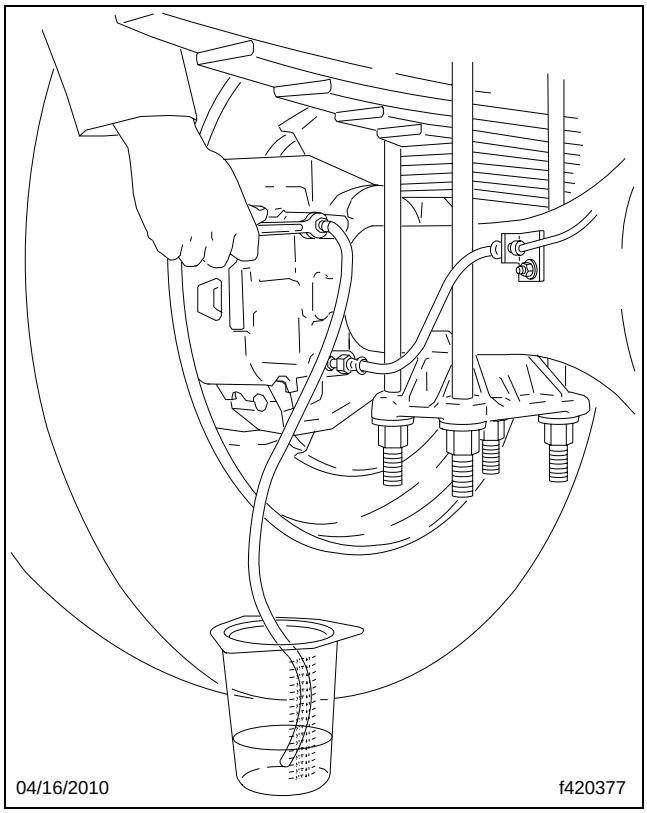

Fig. 14, Bleed the Hydraulic Connection

Manual Bleeding

NOTE: If you do not have pressure bleeding equipment, you can use the manual bleeding procedure.

IMPORTANT: Do not let the brake master cylinder run dry during manual bleeding operations. Keep the master cylinder reservoir filled with new, DOT 4 approved brake fluid. Failure to keep the brake reservoir filled could result in more air entering the system, making it impossible to effectively bleed the system.

1. Open the hood.
2. Bleed the master cylinder.

   2.1 Using a wrench (and a rag to absorb leaking brake fluid), loosen the fitting at the rear outlet port on the master cylinder. See **Fig. 15**. Loosen the fitting about one turn.

   2.2 Have someone push the brake pedal down slowly by hand to the floor. Brake fluid, and any air in the master cylinder, will squirt from the fitting.

   2.3 *With the brake pedal held down*, tighten the rear hydraulic line fitting firmly.

   IMPORTANT: Do not release the brake pedal until the fitting is tightened, or more air will get into the system.

   2.4 Release the brake pedal.

   2.5 Loosen the fitting again, and repeat steps for bleeding as required until no air escapes from the fitting, and the brake pedal feels firm.

   2.6 Check the level of the rear compartment of the reservoir, then add new DOT 4 approved brake fluid if needed.

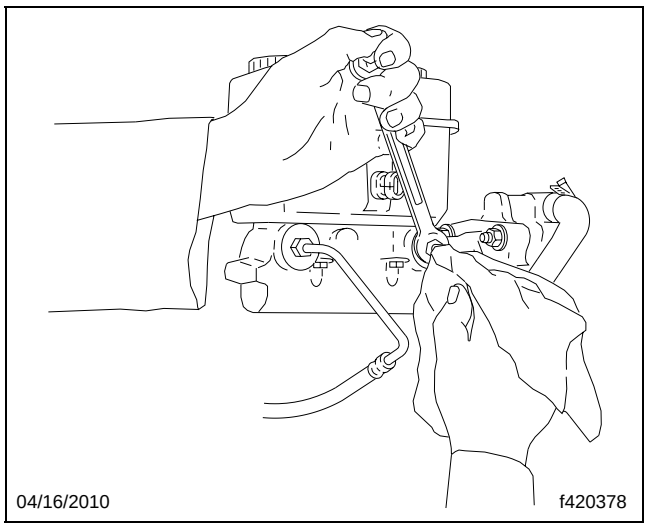

Fig. 15, Rear Outlet Port

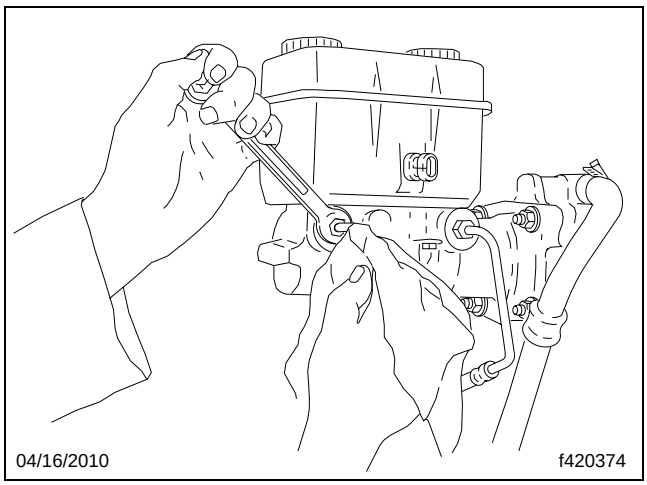

Fig. 16, Front Outlet Port

2.7 Using a wrench (and a rag to absorb leaking brake fluid), loosen the fitting at the front outlet port on the master cylinder. See **Fig. 16**. Loosen the fitting about one turn.

2.8 Repeat steps as required for the front outlet port.

2.9 Check the brake uid level in the front compartment of the reservoir. Add new DOT 4 approved brake fluid if needed.

3. Bleed the hydraulic connections at the wheel calipers, starting at the right rear wheel caliper.

3.1 Put a wrench on the bleeder fitting at the caliper, then attach a length of clear tubing to the bleeder fitting. Make sure the tube fits snugly. Submerge the tubing in a container of clean brake fluid. See **Fig. 16**.

3.2 Loosen the bleeder fitting about 3/4 turn.

3.3 Have someone slowly push the brake pedal to the floor. *With the brake pedal depressed*, tighten the bleeder fitting.

IMPORTANT: Make sure the brake pedal stays depressed while you tighten the fitting. If it is released before you tighten the fitting, more air will get into the system.

3.4 Release the brake pedal. Check the fluid in the tube. If there are air bubbles present, repeat the steps as required until the fluid in the tube is completely free of air bubbles.

3.5 Check the brake uid level in the reservoir. Add new DOT 4 approved brake uid if needed.

3.6 Repeat the steps for bleeding the connections for the left rear caliper, the right front caliper and the left front caliper.

ProTorq® Spindle Nuts Removal and Installation

General Information

Pro-Torq® spindle nuts may be used on ConMet PreSet hubs. See **Fig. 17** and **Fig. 18**.

Each time the Pro-Torq nut assembly is removed for maintenance purposes, replacing the "keeper" is recommended.

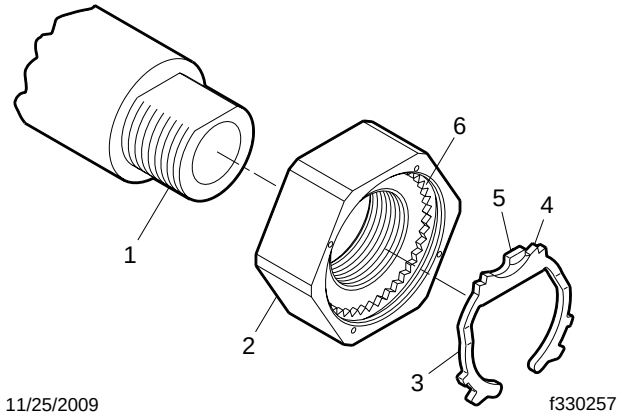

1. Axle Spindle
2. Pro-Torq Nut
3. Keeper Arm
4. Mating Teeth, Keeper
5. Keeper Tab
6. Mating Teeth, Nut

Fig. 17, Pro-Torq Spindle Nut and Keeper

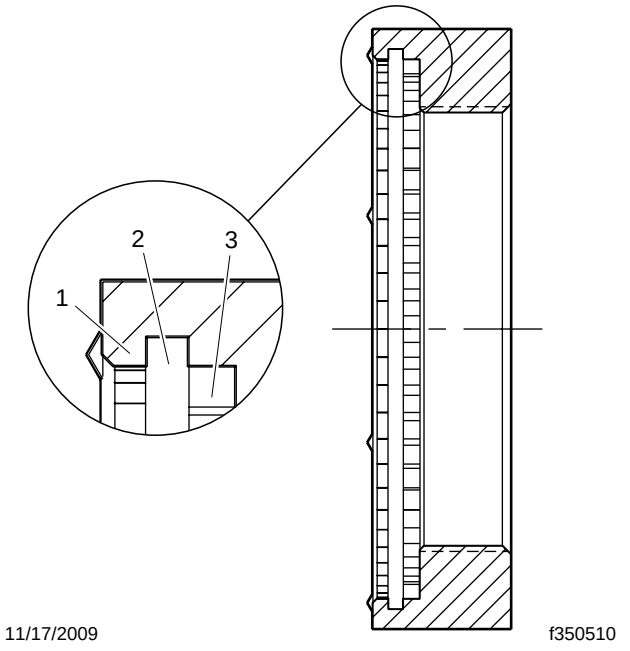

1. Lip
2. Undercut Groove
3. Mating Teeth

Fig. 18, Pro-Torq Spindle Nut, Cross Section

Removal

⚠ WARNING

Do not place the nut on the spindle or tighten or loosen the nut on the spindle while the keeper is locked inside the nut. Doing so may damage the spindle threads and deform the keeper, and allow the nut to unthread during operation. Failure to follow this instruction could cause the hub to separate from the axle, resulting in severe personal injury or death.

1. Insert the blade of a flathead screwdriver (or similar tool) in the slot of one of the keeper arms; see **Fig. 19**. Ensuring that the tool contacts the keeper and not the teeth of the nut, turn the tool slightly and carefully pry the arm from the undercut groove of the nut.
2. Repeat at the other arm, and remove the keeper from the nut.
3. Remove the Pro-Torq nut.

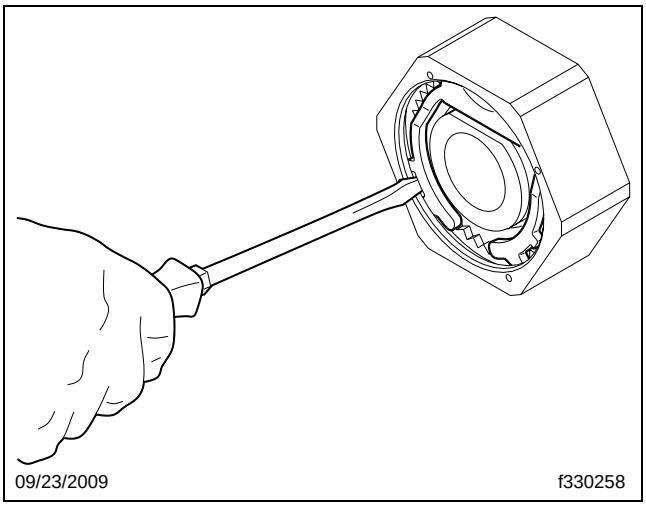

Fig. 19, Removing the Keeper

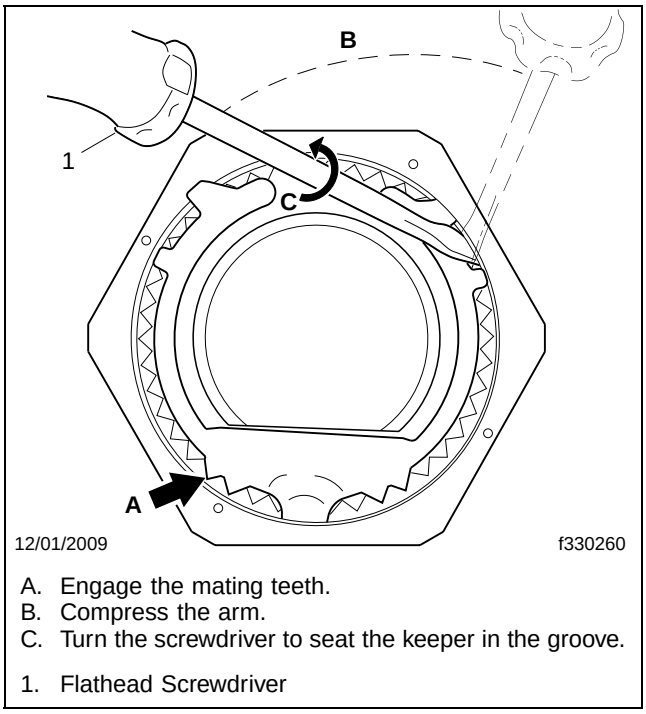

Fig. 20, Installing the Keeper

Installation

The following procedure applies to Pro-Torq steer axle nut 448-4836. The part number is stamped on the nut.

⚠ WARNING

Do not place the nut on the spindle or tighten or loosen the nut on the spindle while the keeper is locked inside the nut. Doing so may damage the spindle threads and deform the keeper, and allow the nut to unthread during operation. Failure to follow this instruction could cause the hub to separate from the axle, resulting in severe personal injury or death.

Instructions for installing a Pro-Torq spindle nut for both PreSet and non-PreSet type bearings are provided in this subject. See the instructions pertaining to the bearing type used with the hub you are securing.

Using PreSet Bearings

1. Ensure the keeper is removed from the nut.
2. Install the Pro-Torq spindle nut, and tighten it 250 lbf·ft (339 N·m). **Do not back it off**.
3. Install the keeper.

   3.1 With the correct side of the keeper facing out, insert the keeper tab in the undercut groove of the Pro-Torq nut, and engage the mating teeth.

   IMPORTANT: If the keeper cannot be engaged, advance the nut until it can be. Do not back off the nut.

   3.2 Use a flathead screwdriver to carefully compress and guide each arm past the lip and into the undercut groove of the nut as shown in **Fig. 20**. To secure the keeper it may be necessary to nudge the arms into the groove.

WARNING

Failure to secure the keeper and lock the Pro-Torq nut could cause the wheel assembly to come off the vehicle, resulting in severe personal injury or death.

4. Inspect the installation; ensure the keeper is locked in the undercut groove of the nut.

Using Non-PreSet Bearings

For ConMet PreSet hubs, when there is no bearing spacer installed and non-PreSet type bearings are being used, proper wheel bearing adjustment is critical to the performance of the bearings, wheel seals, and other related wheel end components.

1. Ensure the keeper is removed from the nut.
2. Seat the bearings.

   2.1 Using a torque wrench, tighten the nut 200 lbf·ft (270 N·m). Spin the hub at least one full rotation.

   NOTE: Torque is lost when the hub is spun.

   2.2 Tighten the nut 200 lbf·ft (270 N·m). Spin the hub at least one full rotation.

   2.3 Tighten the nut 200 lbf·ft (270 N·m), but *do not spin the hub*.
3. Loosen the nut to zero torque. *Do not spin the hub*.
4. Adjust the bearing.

   4.1 Using a torque wrench, tighten the nut 100 lbf·ft (136 N·m). Spin the hub at least one full rotation.

   NOTE: Torque is lost when the hub is spun.

   4.2 Tighten the nut 100 lbf·ft (136 N·m). Spin the hub at least one full rotation.

   4.3 Tighten the nut 100 lbf·ft (136 N·m).

   4.4 Back off the nut one-quarter turn.

IMPORTANT: If the keeper cannot be engaged, advance the nut until it can be. Do not back off the nut.

5. Install the keeper.

   5.1 With the correct side of the keeper facing out, insert the keeper tab in the undercut groove of the Pro-Torq nut, and engage the mating teeth.

   5.2 Use a flathead screwdriver to carefully compress and guide each arm past the lip and into the undercut groove of the nut as shown in **Fig. 20**. To secure the keeper it may be necessary to nudge the arms into the groove.

WARNING

Failure to secure the keeper and lock the Pro-Torq nut could cause the wheel assembly to come off the vehicle, resulting in severe personal injury or death.

6. Inspect the installation; ensure the keeper is locked in the undercut groove of the nut.

NOTE: The figures for the following procedure show a rear hub assembly. The procedure is the same for front and rear.

7. Using a dial indicator, measure the end play as follows.

   IMPORTANT: Do not measure the wheel bearing end play with the wheel mounted on the hub; you cannot accurately measure or adjust bearing end play with the wheel mounted on the hub. Also, ensure that the brakes are not applied so that that drum and hub can move freely.

   7.1 On vehicles equipped with aluminum hubs, install an iron brake drum onto the hub to provide a ferrous surface for the magnetic base of the dial indicator. With flange nuts, secure the drum to the hub using the stud at the 12 o'clock position, followed by the studs at about the 4 o'clock and 8 o'clock positions. Ensure the nuts hold the drum securely; use washers if needed.

   7.2 Clean the spindle end; ensure it is free of debris and provides the smooth surface needed for the dial indicator to take an accurate measurement.

   7.3 Attach the magnetic base of a dial indicator to the drum (or, on vehicles equipped with iron hubs, the hub). See **Fig. 21**.

   7.4 Set the measuring end of the indicator against the spindle end as shown in **Fig. 22**. The indicator should be square with the end of the spindle.

   IMPORTANT: Maintain continual pressure on the hub until you have taken both the inboard and outboard measurements. If you release the hub, an accurate measurement is not possible.

   7.5 To seat the bearings, grip the hub at the three o'clock and nine o'clock positions, and push inward while oscillating it approximately 45 degrees. Maintain pressure on the hub and note the measurement.

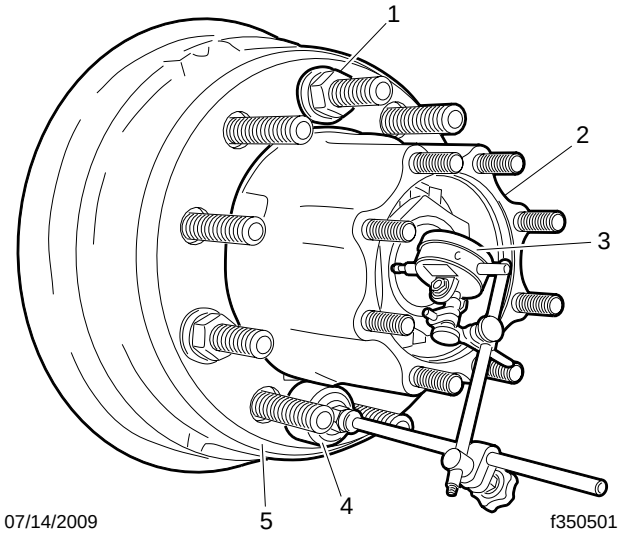

NOTE: Assembly for rear axle shown.

1. Flange Nut
2. Aluminum Hub
3. Dial Indicator
4. Magnetic Base
5. Iron Brake Drum

Fig. 21, Dial Indicator Setup, Aluminum Hub with Iron Brake Drum (rear hub shown)

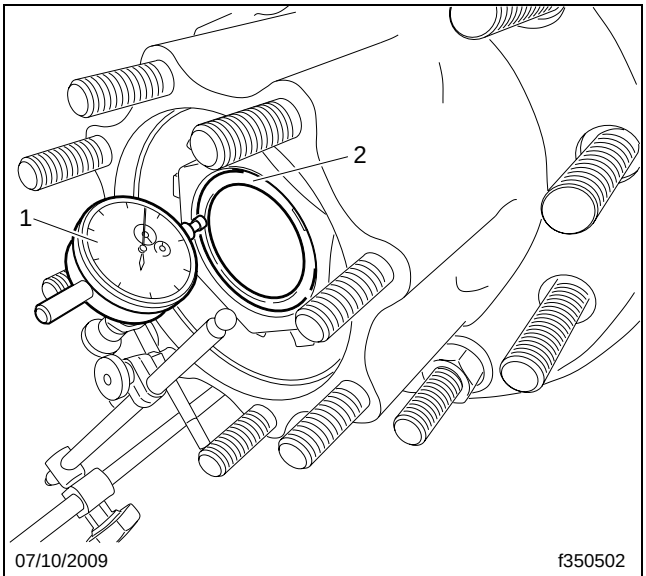

The indicator should be square with the end of the spindle.

NOTE: Assembly for rear axle shown.

1. Dial Indicator
2. Spindle End

Fig. 22, Indicator Square with the Spindle (rear hub shown)

NOTE: The end play measurements must be taken at the same point to prevent an uneven spindle end from skewing the results. As needed, mark the spot on the spindle where the inboard measurement was taken.

7.6 Pull the hub and drum outward while oscillating it as before. Maintain pressure on the hub, and note the outboard extent of the end play. See **Fig. 23**.

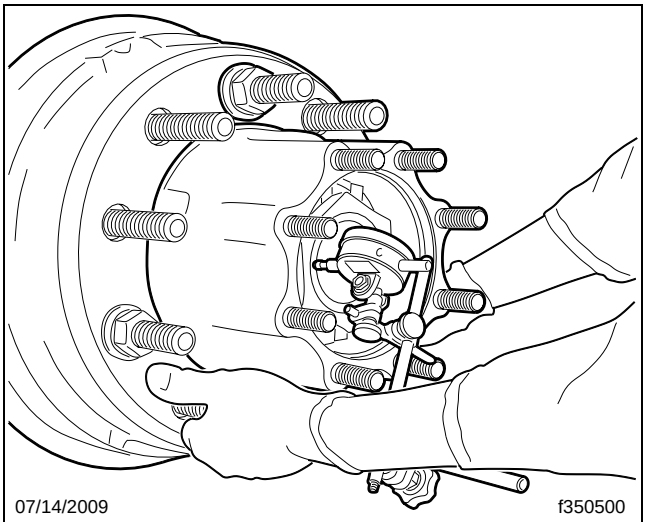

NOTE: Assembly for rear axle shown.

Fig. 23, Pulling the Hub Outward to Measure End Play

7.7 Find the end play by noting the difference between the two readings.

⚠ WARNING

The wheel-bearing end play must be between 0.001 and 0.005 inch (0.03 and 0.13 mm). Correct end play is crucial: if the wheel-bearing end play is not correct, bearing life will diminish and the wheel bearings could fail. This could cause the loss of the wheel and hub assembly, resulting in an accident causing serious injury or property damage. Use a dial indicator to measure the end play.

8. **The end play must be between 0.001 and 0.005 inch (0.03 and 0.13 mm)**. If it is not within this range, remove the Pro-Torq nut, and repeat the tightening sequence as described in previous steps. Once the end play is correct, remove the iron brake drum if installed, and continue your service procedure.

Axiloc® Spindle Nut Removal and Installation

General Information

Axilok® spindle nuts are used on ConMet PreSet hubs. See **Fig. 24** and **Fig. 25**. These nuts can be damaged if they are not removed or installed correctly. Use the following guidelines when removing and installing Axilok retaining nuts.

- Use only the correct size, *six-point* socket to remove or install Axilok spindle nuts. Do not use a worn or loose-fitting socket. **Do not use a 12-point socket.**
- Do not use hammers, chisels, pliers, wrenches, or power tools to remove or install Axilok nuts.
- Do not use an Axilok nut if the locking clips are damaged or missing, or if the retainer cage tab or D-flat is damaged or missing.
- Never try to repair a damaged Axilok nut; always replace it with a new one.
- Always start an Axilok installation by hand. A good-fitting six-point socket will completely disengage the nut's locking clips, allowing it to spin freely by hand. See **Fig.** . Use an accurately calibrated torque wrench to tighten the nut to its final torque value.

Installation

Instructions for installing an Axilok nut for both PreSet and non-PreSet type bearings are provided in this subject. See the pertinent instructions for the type you are installing.

Using PreSet Bearings

⚠ WARNING

Follow the guidelines given in General Information above when installing an Axilok nut. Axilok retaining nuts secure the hub assemblies on the axle. If the Axilok nut is not correctly installed, the hub could separate from the axle, resulting in property damage, severe personal injury or death.

1. Apply a few drops of oil through one of the holes in the Axilok retainer cage to reduce friction between the retainer cage and nut.
2. By hand, install the Axilok nut onto the axle spindle. See **Fig. 24** and **Fig. 25**.
3. Tighten the retaining nut 250 lbf·ft (339 N·m). The nut should lock in place when you remove the wrench. If it does not, advance the nut until it does. **Do not back it off**.
4. Ensure that both locking clips are present and engaged in the retainer cage. See **Fig. 25**. If the locking clips are not engaged, the nut is not locked in position and can rotate freely.

Using Non-PreSet Bearings

For ConMet PreSet hubs, when there is no bearing spacer installed and non-PreSet type bearings are being used, proper wheel bearing adjustment is critical to the performance of the bearings, wheel seals, and other related wheel end components.

⚠ WARNING

Follow the guidelines given in General Information above when installing an Axilok nut. Axilok retaining nuts secure the hub assemblies on the axle. If the Axilok nut is not correctly installed, the hub could separate from the axle, resulting in property damage, severe personal injury or death.

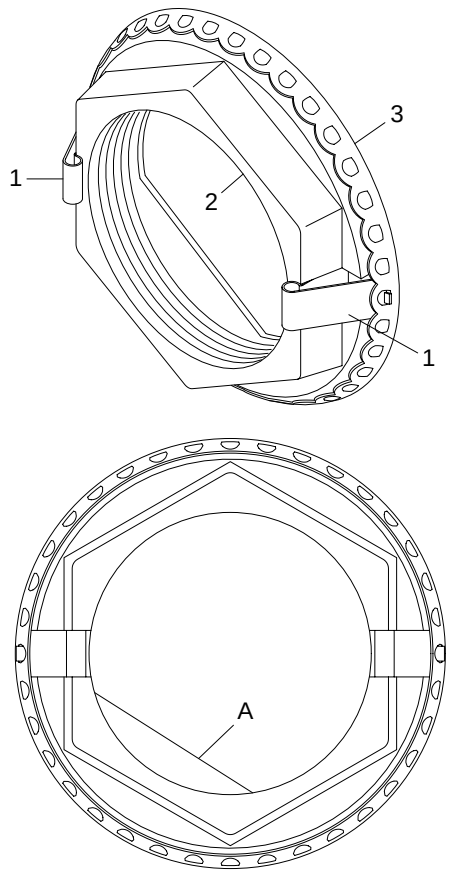

06/20/95 f330126

A. The flat side of the retainer must engage the flat side of the axle spindle.

1. Locking Clip
2. Nut
3. Retainer Cage

Fig. 24, Axilok Retaining Nut

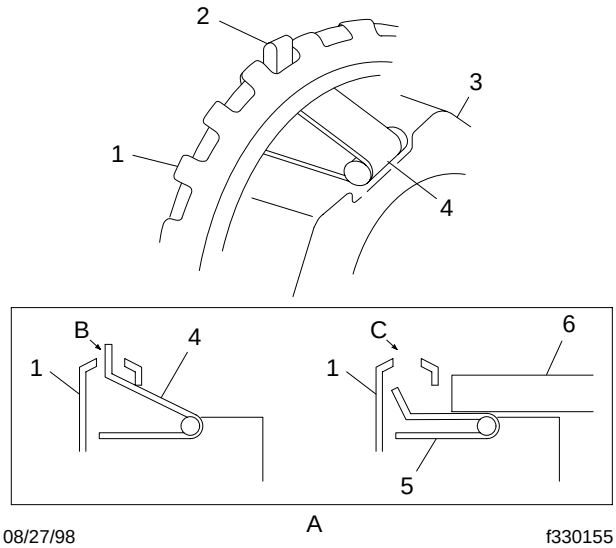

08/27/98 f330155

A. Cross-Section View
B. The tab is engaged.
C. The tab is disengaged.

1. Retainer Cage
2. Locking Clip Tab
3. Nut
4. Locking Clip
5. Locking Clip (compressed)
6. Six-Point Socket

Fig. 25, Axilok Nut, Checking the Position of the Locking Clip

1. Apply a few drops of oil through one of the holes in the Axilok retainer cage to reduce friction between the retainer cage and nut. See **Fig. 24** and **Fig. 25**.
2. Install the Axilok nut and adjust the wheel bearings, as follows.
   - 2.1 By hand, install the Axilok nut onto the axle spindle and turn it against the bearing while spinning the hub.
   - 2.2 Tighten the nut 90 to 110 lbf·ft (122 to 149 N·m) while spinning the hub in both directions.
   - 2.3 Loosen the nut to zero torque, and spin the hub a few turns.
   - 2.4 Tighten the nut 50 lbf·ft (68 N·m) while spinning the hub in both directions. Back off the nut one-eighth to one-sixth turn.
   - 2.5 Remove the wrench from the nut, and verify whether both locking clips are present and engaged in the retainer cage. See **Fig. 25**. If the locking clips are not engaged, advance the Axilok until they are.

NOTE: The figures for the following procedure show a rear hub assembly. The procedure is the same for front and rear.

3. Using a dial indicator, measure the end play as follows.

   IMPORTANT: Do not measure the wheel bearing end play with the wheel mounted on the hub; you cannot accurately measure or adjust bearing end play with the wheel mounted on the hub. Also, ensure that the brakes are not applied so that that drum and hub can move freely.

   3.1 On vehicles equipped with aluminum hubs, install an iron brake drum onto the hub to provide a ferrous surface for the magnetic base of the dial indicator. With flange nuts, secure the drum to the hub using the stud at the 12 o'clock position, followed by the studs at about the 4 o'clock and 8 o'clock positions. Ensure the nuts hold the drum securely; use washers if needed.

   3.2 Clean the spindle end; ensure it is free of debris and provides the smooth surface needed for the dial indicator to take an accurate measurement.

   3.3 Attach the magnetic base of a dial indicator to the drum (or, on vehicles equipped with iron hubs, the hub). See **Fig. 26**.

   3.4 Set the measuring end of the indicator against the spindle end as shown in **Fig. 27**. The indicator should be square with the end of the spindle.

   IMPORTANT: Maintain continual pressure on the hub until you have taken both the inboard and outboard measurements. If you release the hub, an accurate measurement is not possible.

   3.5 To seat the bearings, grip the hub at the three o'clock and nine o'clock positions, and push inward while oscillating it approximately 45 degrees. Maintain pressure on the hub and note the measurement.

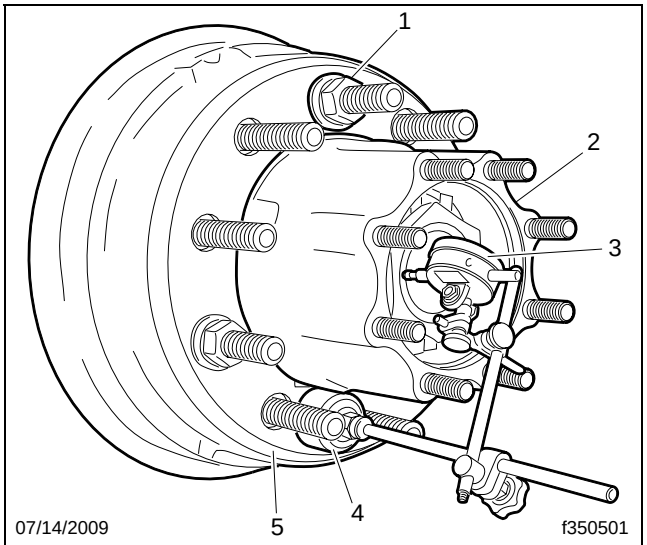

NOTE: Assembly for rear axle shown.

1. Flange Nut
2. Aluminum Hub
3. Dial Indicator
4. Magnetic Base
5. Iron Brake Drum

Fig. 26, Dial Indicator Setup, Aluminum Hub with Iron Brake Drum (rear hub shown)

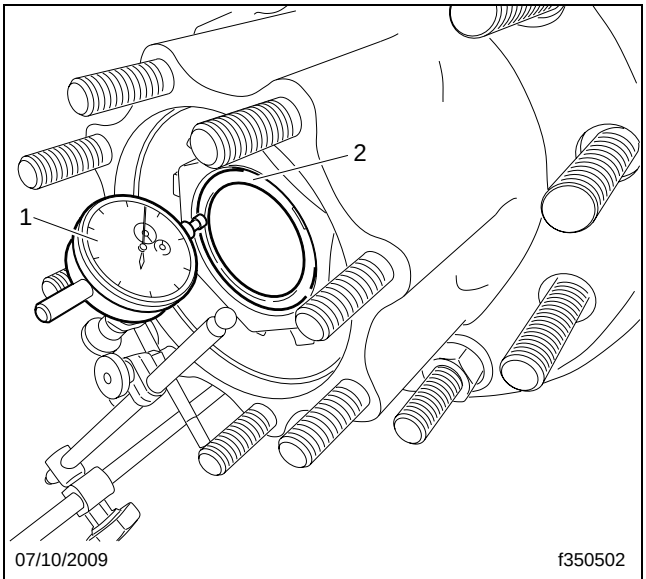

The indicator should be square with the end of the spindle.

NOTE: Assembly for rear axle shown.

1. Dial Indicator
2. Spindle End

Fig. 27, Indicator Square with the Spindle (rear hub shown)

NOTE: The end play measurements must be taken at the same point to prevent an uneven spindle end from skewing the results. As needed, mark the spot on the spindle where the inboard measurement was taken.

3.6 Pull the hub and drum outward while oscillating it as before. Maintain pressure on the hub, and note the outboard extent of the end play. See **Fig. 28**.

3.7 Find the end play by noting the difference between the two readings.

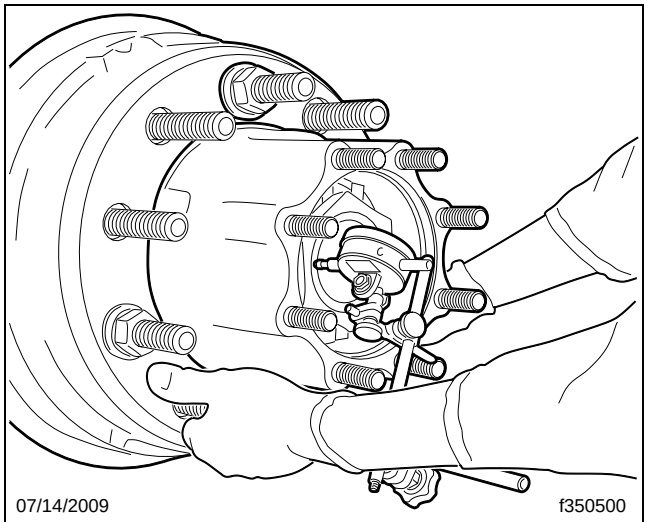

NOTE: Assembly for rear axle shown.

Fig. 28, Pulling the Hub Outward to Measure End Play

⚠ WARNING

The wheel-bearing end play must be between 0.001 and 0.005 inch (0.03 and 0.13 mm). Correct end play is crucial: if the wheel-bearing end play is not correct, the wheel bearings could fail. This could cause the loss of the wheel and hub assembly, resulting in an accident causing serious injury or property damage. Use a dial indicator to measure the end play.

4. **The end play must be between 0.001 and 0.005 inch (0.03 and 0.13 mm)**. If it is not within this range, remove the Axilok nut, and repeat the tightening sequence as described earlier in this procedure. Once the end play is correct, continue with your service procedure.

Four-Piece Wheel Bearing Lock System Removal and Installation

General Information

ConMet PreSet hubs may use a four-piece wheel bearing lock system. See **Fig. 29**.

Removal

Once a four-piece wheel bearing lock set is removed, discard the bend-type locking washer, if used. Inspect the adjusting nut, lockring, and jam nut for visible damage prior to reuse.

Installation

Instructions for installing a four-piece wheel bearing lock set for both PreSet and non-PreSet type bearings are provided in this subject. See the pertinent instructions for the type you are installing.

Using PreSet Bearings

1. Install the adjusting nut onto the axle spindle, and tighten it 300 lbf·ft (407 N·m). See **Fig. 29**.

IMPORTANT: The gaps between holes in the lockring are spaced unevenly, so to fit the tab on the adjusting nut into one of the holes with minimal turning of the adjusting nut, gauge the distance on one side of the lockring, then the other, and choose the side that requires the adjusting nut to be advanced the least. Do not back off the nut.

2. Install the lockring (as described in the note above) and bend-type locking device.
3. Install the jam nut, and tighten it 200 lbf·ft (271 N·m).
4. If equipped, bend the tabs on the locking washer at 6 o'clock and 12 o'clock to lock the jam nut in place.
5. Rotate the hub in both directions. It should turn freely with no dragging or binding.

Using Non-PreSet Bearings

For ConMet PreSet hubs, when there is no bearing spacer installed and non-PreSet type bearings are being used, proper wheel bearing adjustment is critical to the performance of the bearings, wheel seals, and other related wheel end components.

1. Install the adjusting nut, as follows. See **Fig. 29**.
   - 1.1 Install the adjusting nut on the spindle, and tighten it finger-tight.
   - 1.2 While rotating the wheel hub assembly, tighten the adjusting nut 200 lbf·ft (271 N·m).
   - 1.3 Back off the adjusting nut one full turn.
   - 1.4 Tighten the adjusting nut 50 lbf·ft (68 N·m) while rotating the wheel hub assembly.
   - 1.5 Back off the adjusting nut one-quarter turn.

NOTE: The gaps between holes in the lockring are spaced unevenly, so to fit the tab on the adjusting nut into one of the holes with minimal turning of the adjusting nut, gauge the distance on one side of the lockring, then the other, and choose the side that requires the adjusting nut to be advanced the least. Do not back off the nut.

2. Install the lockring (as described in the note above) and bend-type locking washer, if used.
3. Install the jam nut, and tighten it 200 to 300 lbf·ft (270 to 405 N·m).

NOTE: The figures for the following procedure show a rear hub assembly. The procedure is the same for front and rear.

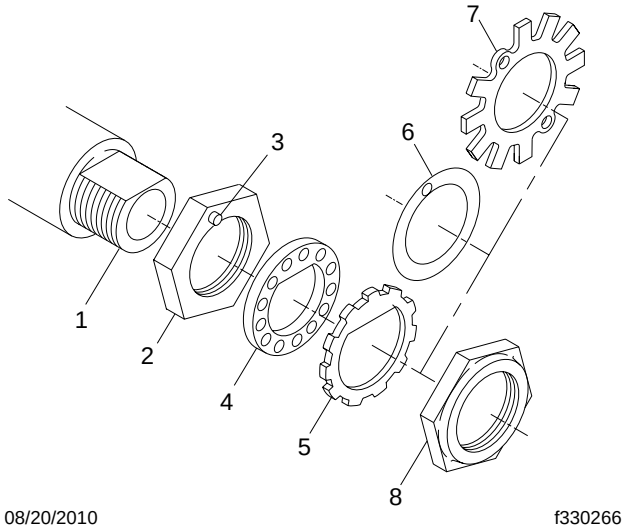

NOTE: Only one of items 5, 6, or 7 is used.

1. Axle Spindle
2. Adjusting Nut
3. Dowel
4. Lockring
5. Nut-Lock
6. Retaining Washer
7. Bend-Type Locking Washer
8. Jam Nut

Fig. 29, Four-Piece Wheel Bearing Lock Set

4. Using a dial indicator, measure the end play as follows.

IMPORTANT: Do not measure the wheel bearing end play with the wheel mounted on the hub; you cannot accurately measure or adjust bearing end play with the wheel mounted on the hub. Also, ensure that the brakes are not applied so that that drum and hub can move freely.

4.1 On vehicles equipped with aluminum hubs, install an iron brake drum onto the hub to provide a ferrous surface for the magnetic base of the dial indicator. With flange nuts, secure the drum to the hub using the stud at the 12 o'clock position, followed by the studs at about the 4 o'clock and 8 o'clock positions. Ensure the nuts hold the drum securely; use washers if needed.

4.2 Clean the spindle end; ensure it is free of debris and provides the smooth surface needed for the dial indicator to take an accurate measurement.

4.3 Attach the magnetic base of a dial indicator to the drum (or, on vehicles equipped with iron hubs, the hub). See **Fig. 30**.

4.4 Set the measuring end of the indicator against the spindle end as shown in **Fig. 31**. The indicator should be square with the end of the spindle.

IMPORTANT: Maintain continual pressure on the hub until you have taken both the inboard and outboard measurements. If you release the hub, an accurate measurement is not possible.

4.5 To seat the bearings, grip the hub at the three o'clock and nine o'clock positions, and push inward while oscillating it approximately 45 degrees. Maintain pressure on the hub and note the measurement.

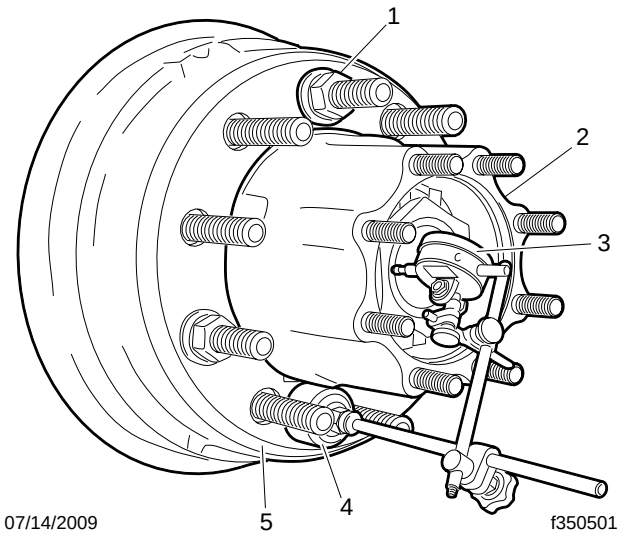

NOTE: Assembly for rear axle shown.

1. Flange Nut
2. Aluminum Hub
3. Dial Indicator
4. Magnetic Base
5. Iron Brake Drum

Fig. 30, Dial Indicator Setup, Aluminum Hub with Iron Brake Drum (rear hub shown)

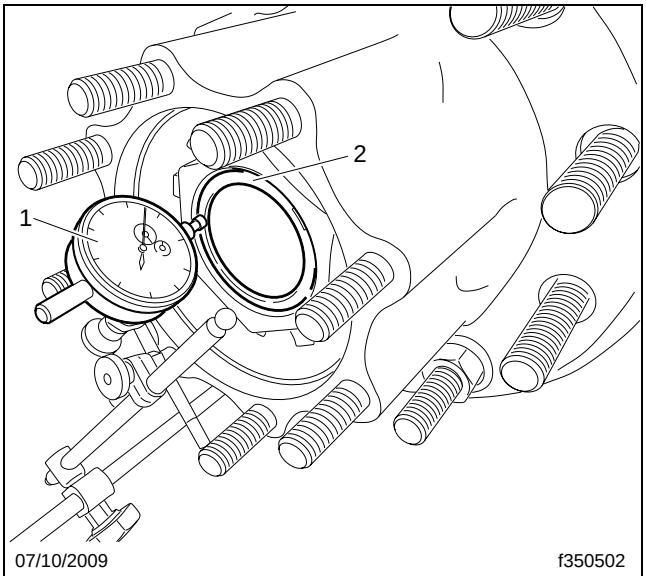

The indicator should be square with the end of the spindle.

NOTE: Assembly for rear axle shown.

1. Dial Indicator
2. Spindle End

Fig. 31, Indicator Square with the Spindle (rear hub shown)

NOTE: The end play measurements must be taken at the same point to prevent an uneven spindle end from skewing the results. As needed, mark the spot on the spindle where the inboard measurement was taken.

4.6 Pull the hub and drum outward while oscillating it as before. Maintain pressure on the hub, and note the outboard extent of the end play. See **Fig. 32**.

4.7 Find the end play by noting the difference between the two readings.

⚠ WARNING

The wheel-bearing end play must be between 0.001 and 0.005 inch (0.03 and 0.13 mm). Correct end play is crucial: if the wheel-bearing end play is not correct, the wheel bearings could fail. This could cause the loss of the wheel and hub assembly, resulting in an accident causing serious injury or property damage. Use a dial indicator to measure the end play.

5. **The end play must be between 0.001 and 0.005 inch (0.03 and 0.13 mm).** If the end play is not within this range, adjust the end play as follows.

5.1 Remove the jam nut and locking device, and back off or tighten the inner adjusting nut.

5.2 Install the locking device and jam nut as described earlier, and measure the end play. If the end play is not between 0.001 and 0.005 inch (0.03 and 0.13 mm), turn the adjusting nut again.

5.3 Measure the end play.

If the end play is not between 0.001 and 0.005 inch (0.03 and 0.13 mm), repeat the adjustment procedure until the correct end play is achieved.

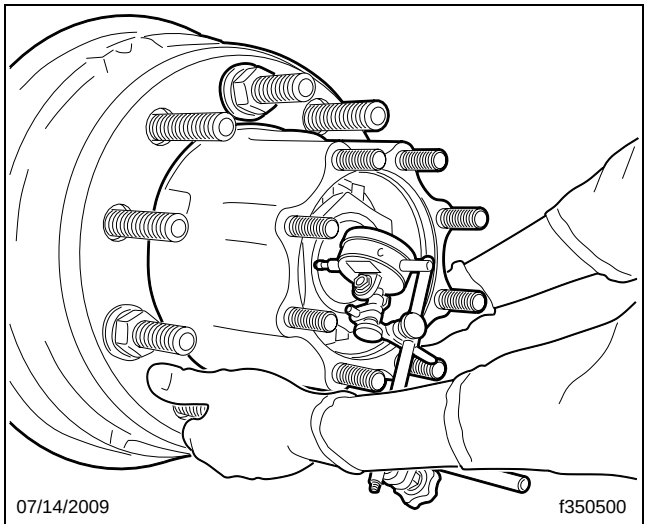

NOTE: Assembly for rear axle shown.

Fig. 32, Pulling the Hub Outward to Measure End Play

IMPORTANT: The correct end play **must** be achieved before completing the hub assembly installation procedure.

6. Once the end play is between 0.001 and 0.005 inch (0.03 and 0.13 mm), bend two tabs on the locking washer (if equipped) at 6 o'clock and 12 o'clock to lock the jam nut in place. See **Fig. 29**.
7. Rotate the hub in both directions. It should turn freely with no dragging or binding.

Wheel Bearing Cup Replacement

If the steering knuckle has been replaced, and the vehicle has over 5000 miles, the wheel bearings must be replaced. Follow the instructions below for replacing the wheel bearing cups in the type of hub installed on the vehicle (alumimun or ferrous).

Wheel Bearing Cup Replacement, Aluminum Hubs

To ensure a tight fit, wheel bearing cups (**Fig. 33**) are purposely larger than the wheel hub bores they occupy. To remove the bearing cups, aluminum hub bores must be temporarily expanded using the heat of an oven or boiling water (the bearing cups will also expand, but to a considerably lesser extent). If adequate heating facilities are not available, replace the hub, wheel stud, and bearing cup assembly.

To install the bearing cups, aluminum hubs must be temporarily expanded using the heat of an oven or boiling water. When the hub is properly heated throughout, the bearing cup and hub can be press-fit together, using a suitable press. Cooling the cups in a freezer can further ease the installation.

1. Using a solvent, completely remove all grease, oil, and other debris from the outer and inner surfaces of the wheel hub assembly.
2. Heat the hub to a temperature range of 175 to 215°F (79 to 102°C). If using an oven, make sure the thermostat is accurate; if unsure, use an oven thermometer to check the temperature of the oven before placing the hub inside.

   If adequate heating facilities are not available, replace the hub, wheel stud, and bearing cup assembly.

WARNING

Do not use oxyacetylene equipment or similar equipment to heat the hub. Oxyacetylene equipment or similar equipment will cause cracks in the hub which could cause loss of a wheel and loss of vehicle control, leading to personal injury or property damage.

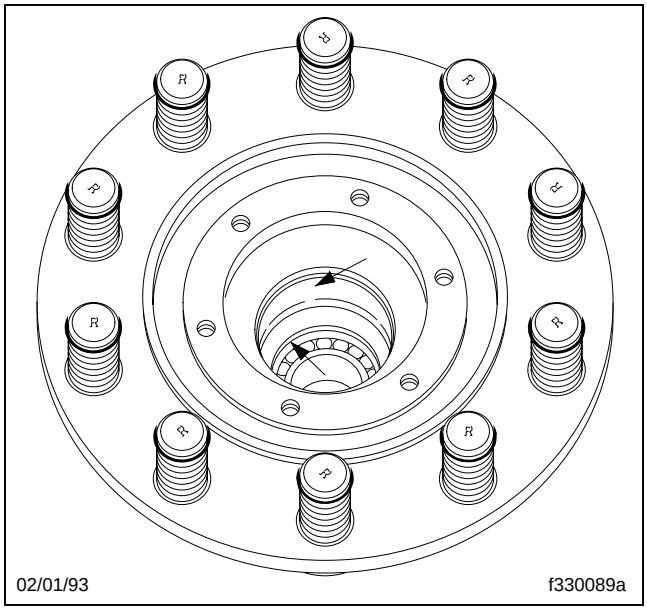

Fig. 33, Wheel Bearing Cup Locations

3. Wearing heavy protective gloves, remove the hub from the oven or water. Place the hub on a suitable press so that the base is fully supported. Quickly press out the bearing cups.

   If the cup is loose, allow a few minutes for the temperatures of the components to equalize before moving the hub.

IMPORTANT: Inspect the bearing cup bore for evidence of cup rotation (spun cups). If found, replace the hub.

4. Using a solvent, completely remove all grease, oil, and other debris from the outer and inner surfaces of the wheel hub assembly, including the bearing cup bores.

5. Inspect the bearing cup bores of the hub for warpage or uneven surfaces. If a bearing cup bore is damaged, replace the wheel hub assembly.

WARNING

Do not use oxyacetylene equipment or similar equipment to heat the hub. Oxyacetylene equipment or similar equipment will cause cracks in the hub which could cause loss of a wheel and loss of vehicle control, leading to personal injury or property damage.

6. Heat the hub to a temperature range of 175 to 215°F (79 to 102°C). If using an oven, verify that the oven thermostat is accurate; if unsure, use an oven thermometer to check the temperature of the oven before placing the hub inside.

7. Coat the replacement bearing cup hub contact surface with a film of grease.
8. Wearing heavy protective gloves, remove the hub from the oven or water.
9. Place the hub on a suitable press so that the base is fully supported. Quickly press-fit the bearing cup into the wheel hub until it is completely and evenly seated. Be careful not to shave the sides of the bearing cup bore as the bearing cup is seated. The accumulation of debris will prevent the cup from being seated and will also cause permanent damage to the wheel hub. If the sides of the bearing cup bore are damaged during installation, replace the wheel hub assembly.
10. Allow the wheel hub to cool before handling. Then, using a 0.0015-inch feeler gauge, check at several places for the seating of the bearing cup in the bearing cup bore. The gauge should not enter beneath the cup. If it does, there is probably dirt or debris preventing the cup from seating. Using the instructions above, remove the cup, then remove the foreign matter. Reinstall the cup.
11. Wipe off the accumulation of grease left after the bearing cup has been seated. Then, using a clean, lint-free cloth dampened with kerosene or diesel fuel oil, clean the inner surface of the bearing cup. Wipe the surface dry using a clean, absorbent, and lint-free cloth or paper.

Wheel Bearing Cup Replacement, Ferrous Hubs

Wheel bearing cups on ferrous hubs are removed and installed by driving them out and pressing them in without heating the hub.

1. Using a solvent, completely remove all grease, oil, and other debris from the outer and inner surfaces of the wheel hub assembly.
2. Using a mild-steel rod through the opposite end of the hub, drive against the inner edge of the bearing cup. Alternately drive on opposite sides of the cup to avoid cocking the cup and damaging the inside of the hub.
3. Using a solvent, completely remove all grease, oil, and other debris from the outer and inner surfaces of the wheel hub assembly, including the bearing cup bores.
4. Inspect the bearing cup bores of the hub for warpage or uneven surfaces. If a bearing cup bore is damaged, replace the wheel hub assembly.
5. Coat the hub-contact surface of the replacement bearing cup with a film of grease.
6. Position the cup in the hub and press it into place, using a suitable driving tool. Cups must seat against the shoulder in the hub.
7. Wipe off the accumulation of grease left after the bearing cup has been seated. Then, using a clean lint-free cloth dampened with kerosene or diesel fuel oil, clean the inner surface of the bearing cup. Wipe the surface dry using a clean, absorbent, and lint-free cloth or paper.

Wheel and Tire Installation

1. Clean the hub and wheel mounting surfaces. Make sure the tire is correctly inflated.
2. Apply a few drops of light engine oil to the wheel studs and the area between the body and the flange of each two-piece flange nut. See **Fig. 34**. Wipe off any excess oil.

NOTICE

The wheel center hole and hub pilot have close tolerances. If the wheel is not kept square to the hub, it could bind during installation and damage the stud threads or pilot pads. Keep the wheel square to the hub during installation.

IMPORTANT: Before installing the wheels, make sure the drum is positioned on the raised step of the pilot pad. One of the hub's pilot pads must be at the top location. To help keep the drum in place, it may be necessary to apply the brakes before installing the wheels.

3. Locate one hub-pilot pad in the top-center position. Using a jack or wheel-and-tire dolly, position the wheel assembly on the hub. Make sure the wheel is square to the hub and that the threads are not damaged by contact with the wheel during installation.
4. Make sure the hub-pilot pad is still centered at the top.

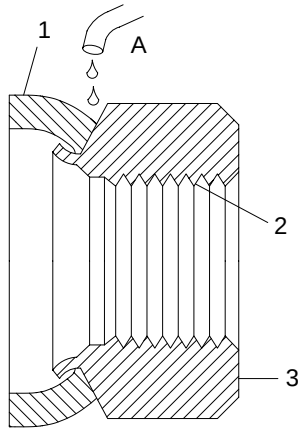

08/20/93 f400051a

A. Apply oil here.

1. Flange
2. Nut Threads
3. Nut Body

Fig. 34, Lubricating a Two-Piece Flange Nut

IMPORTANT: Install the wheel assembly so that the balance weight(s) on the wheels are 180 degrees opposite the balance weight(s) on the brake drum.

5. Install and hand-tighten a two-piece flange nut on the top and bottom studs.

NOTICE

The two-piece flange nuts have right-hand metric threads. Do not try to install a similar size SAE nut on a stud or the stud and nut will be damaged.

6. Install and hand-tighten the remaining two-piece flange nuts. Tighten the nuts 50 lbf·ft (68 N·m) following the sequence in **Fig. 35** or **Fig. 36**.
7. Check that the wheel is correctly seated against the hub and on the hub-pilot pads.
8. Following the sequence in **Fig. 35** or **Fig. 36**, tighten the two-piece flange nuts 450 to 500 lbf·ft (610 to 678 N·m).

⚠ WARNING

If the wheel nuts cannot be tightened to minimum torque values, the studs could be turning in the hub flange, having lost their locking ability. In this case, the wheel hub assembly is damaged and must be replaced with a new assembly.

Failure to reach minimum torque values could also be caused by stripped threads on the wheel studs or wheel nuts. Damaged parts must be replaced with new parts. Failure to replace damaged parts could result in the loss of a wheel or loss of vehicle control, causing property damage or personal injury.

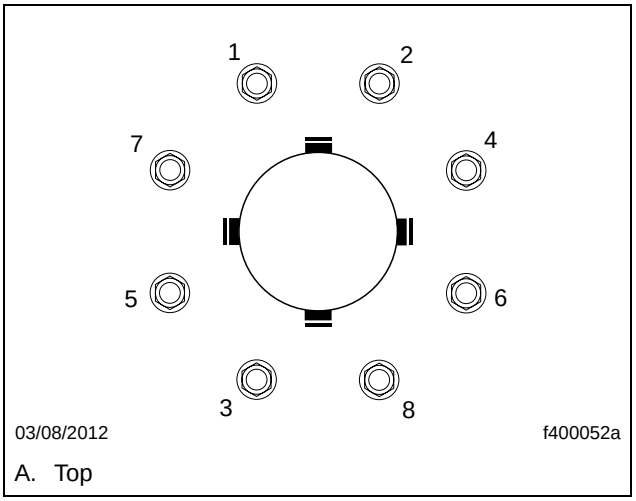

Fig. 35, 8-Stud Disc Wheel Tightening Sequence

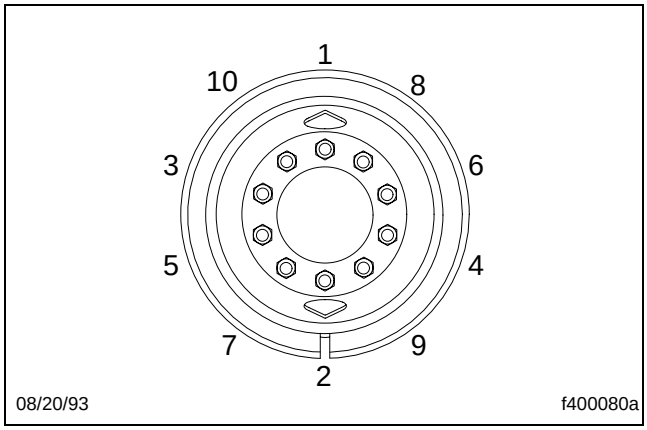

Fig. 36, 10-Stud Disc Wheel Tightening Sequence

NOTICE

Too little wheel nut torque can cause wheel shimmy, wheel damage, stud breakage and extreme tire tread wear. Too much wheel nut torque can break studs, damage threads and crack discs in the stud hole area. Use the specified torque values and follow the tightening sequence in Fig. 35 or Fig. 36.

IMPORTANT: The two-piece flange nuts seat during vehicle operation. It is necessary to periodically tighten the wheel nuts to the specified torque. Tighten the two-piece flange nuts to the specified torque 50 to 100 miles (80 to 160 km) after service work and check the torque every 10,000 miles (16 000 km).