FLA COE
FLB COE
FLD Conventional
Business Class
FLC 112 Conventional
Century Class Conventional
Argosy COE
Cargo
Columbia
> Coronado
Business Class M2
Cascadia
108SD/114SD

Freightliner Service Bulletin

General Information

Some EPA10 compliant Coronado vehicles, manufactured from start of production to the dates listed below, with specific combination of engine operating parameters, may have radiator failures resulting in a coolant leak due to a crack in the coolant tube. See **Fig. 1**. Leaks in other places (at the end tank, header, fittings, or any place other than the coolant tubes) do not apply for this bulletin. If leaks occur in the coolant tubes, Freightliner recommends a radiator update to an isolated engine-mounted 1700 sq in radiator. Isolated engine-mounted radiators were production installed beginning in January, 2012. This procedure is to replace a standard engine-mounted 1700 sq in radiator with an isolated engine-mounted 1700 sq in radiator.

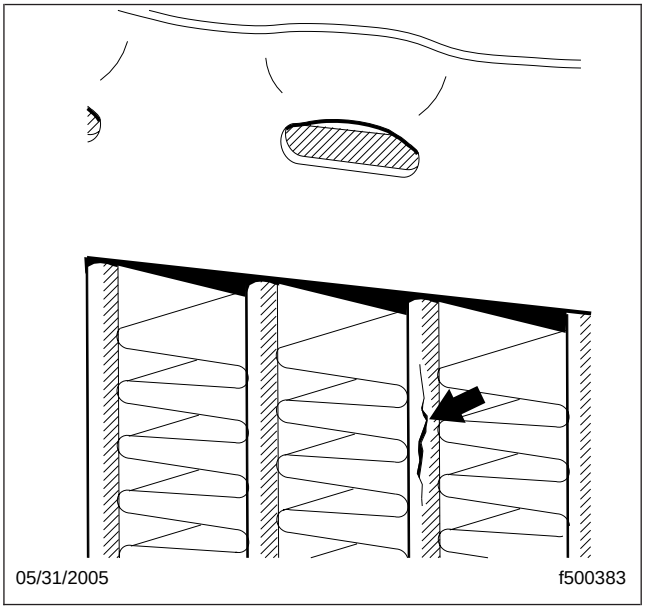

Fig. 1, Crack in Coolant Tube

IMPORTANT: The required parts for this procedure will vary depending on the type of engine installed. See **Table 1** under "Parts" for a list of required parts for the vehicle being serviced.

Radiator Mount Replacement

1. Park the vehicle on a level surface, shut down the engine, and set the parking brake. Chock the tires.
2. Remove the hood. For instructions, see **Section 88.00, Subject 100** in the *Coronado Workshop Manual*.
3. Remove the bumper. For instructions, refer to **Group 31** of the *Coronado Workshop Manual*.
4. Drain the coolant from the radiator and engine block.
5. Remove the charge air cooler (CAC) plumbing at the turbocharger outlet and the CAC inlet. See **Fig. 2**.
6. Remove the CAC plumbing at the CAC outlet and the engine inlet. See **Fig. 3**.
7. Remove the surge tank. See **Fig. 4**. For instructions, see **Section 20.00, Subject 110** of the *Coronado Workshop Manual*.
8. Remove the upper radiator hose. See **Fig. 5**.
9. Disconnect the surge tank vent line. See **Fig. 6**.

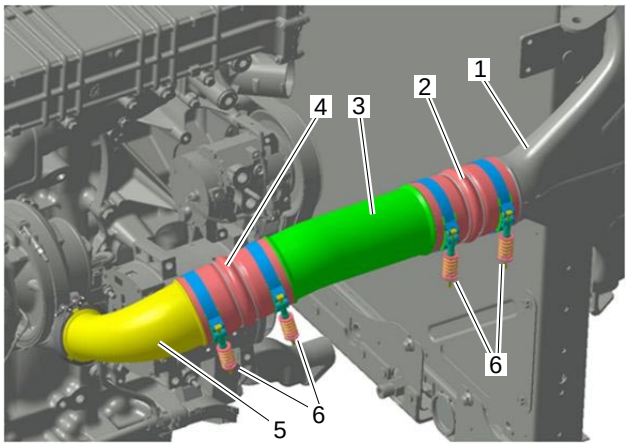

10/16/2012 f200767

1. CAC Inlet
2. Hose
3. Tube
4. Hose
5. Turbocharger Inlet Pipe
6. Clamp

Fig. 2, CAC Plumbing, Turbocharger-to-CAC

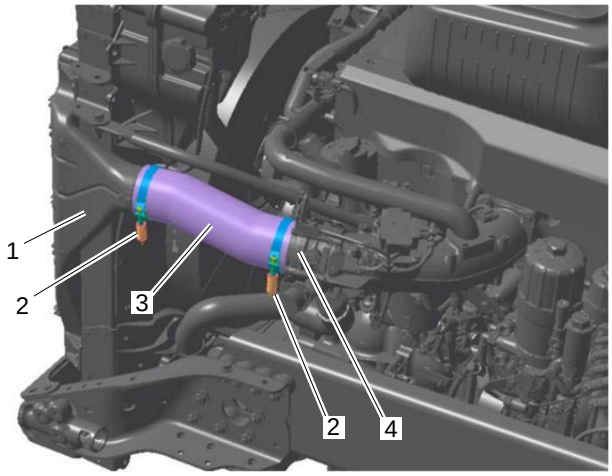

10/16/2012 f200768

1. CAC Outlet
2. Clamp
3. Hose
4. Engine Inlet

Fig. 3, CAC Plumbing, CAC-to-Engine Inlet

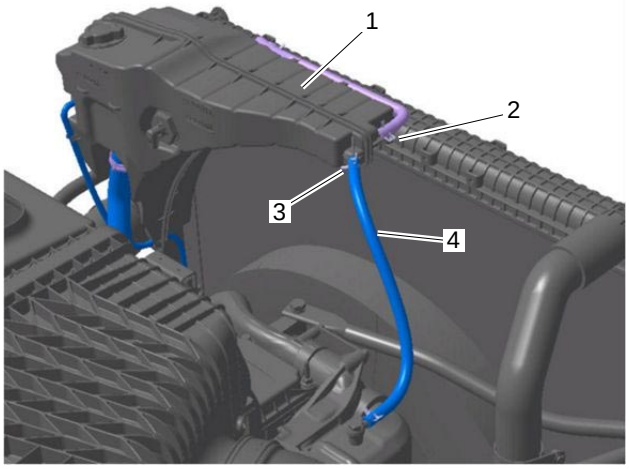

10/16/2012 f200770

1. Surge Tank
2. P-Clamp
3. Clamp
4. Vent Line

Fig. 4, Surge Tank Installation

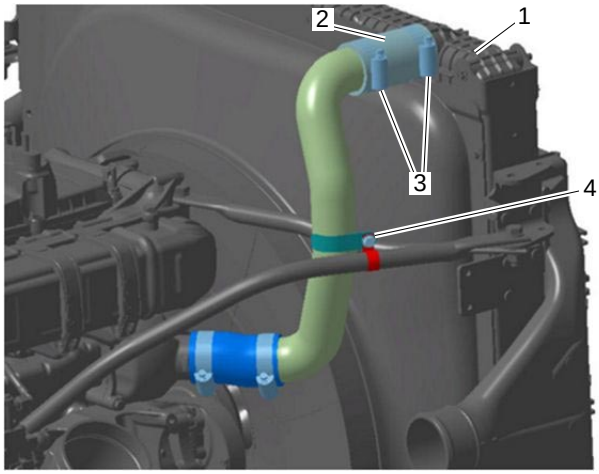

10/16/2012 f200771

1. Radiator
2. Upper Radiator Hose
3. Clamp
4. Clamp Fastener

Fig. 5, Upper Radiator Hose Installation

10. Loosen the A/C condenser and move it out of the way as follows.

    10.1 Remove the receiver-drier and upper A/C hose mounting nuts, then free the receiver-drier. See **Fig. 13**.

10.2 Remove the radiator baffle from the right side of the radiator.

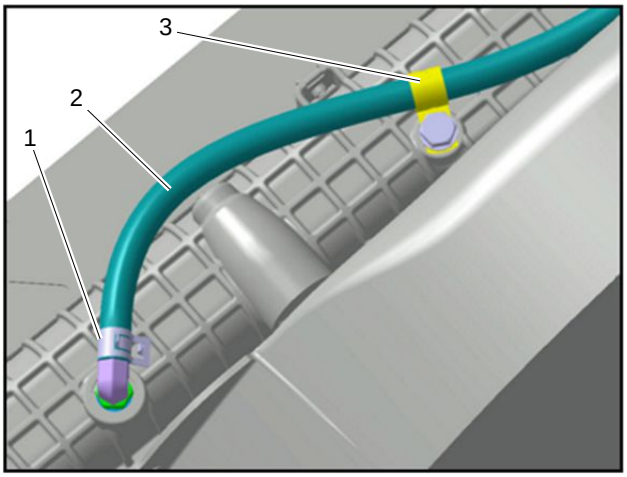

10/16/2012 f200769

1. Clamp
2. Line
3. P-Clamp

Fig. 6, Surge Tank Vent Line

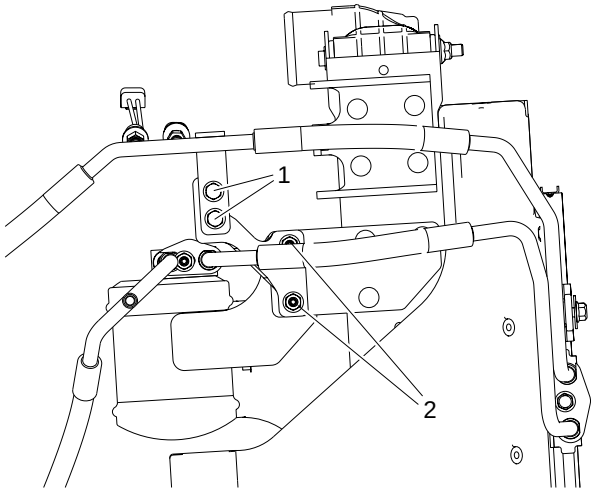

05/24/2012 f200759

1. Upper Condenser Line Mounting Nuts
2. Receiver-Drier Mounting Nuts

Fig. 7, Receiver-Drier Installation (typical)

10.3 Unbolt the A/C condenser from the CAC. See **Fig. 8**.

NOTE: Wrap the condenser in cardboard to protect it while it is moved.

10.4 Carefully move the condenser around and set it on right front tire. Secure it as needed. See **Fig. 9**.

11. Remove the three radiator strut rods and discard them.
12. Remove the upper and left-side radiator baffles.
13. Remove the upper fan shroud. See **Fig. 10**.
14. Remove the fan. For instructions, refer to **Group 20** of the *Coronado Workshop Manual*.
15. Remove the lower radiator hose. See **Fig. 11**.
16. Disconnect the transmission cooler lines from the radiator. Cap and/or plug the fittings to prevent spills.
17. Unbolt the radiator from the lower mounts.
18. Using an appropriate lifting device, remove the radiator assembly from vehicle. See **Fig. 12**.
19. Remove the lower fan shroud from the radiator. See **Fig. 10**.
20. Remove the CAC from the radiator.
21. Remove the lower radiator mounting brackets from the engine.
22. Install the new lower radiator mounting brackets. See **Fig. 13**. Tighten 191 to 234 lbf·ft (260 to 317 N·m).
23. Install the lower radiator isolators on the mounting brackets. See **Fig. 14**.
24. Using an appropriate lifting device, position the new radiator assembly in the vehicle. Install the mounting nuts, but do not tighten them at this time. See **Fig. 14**.

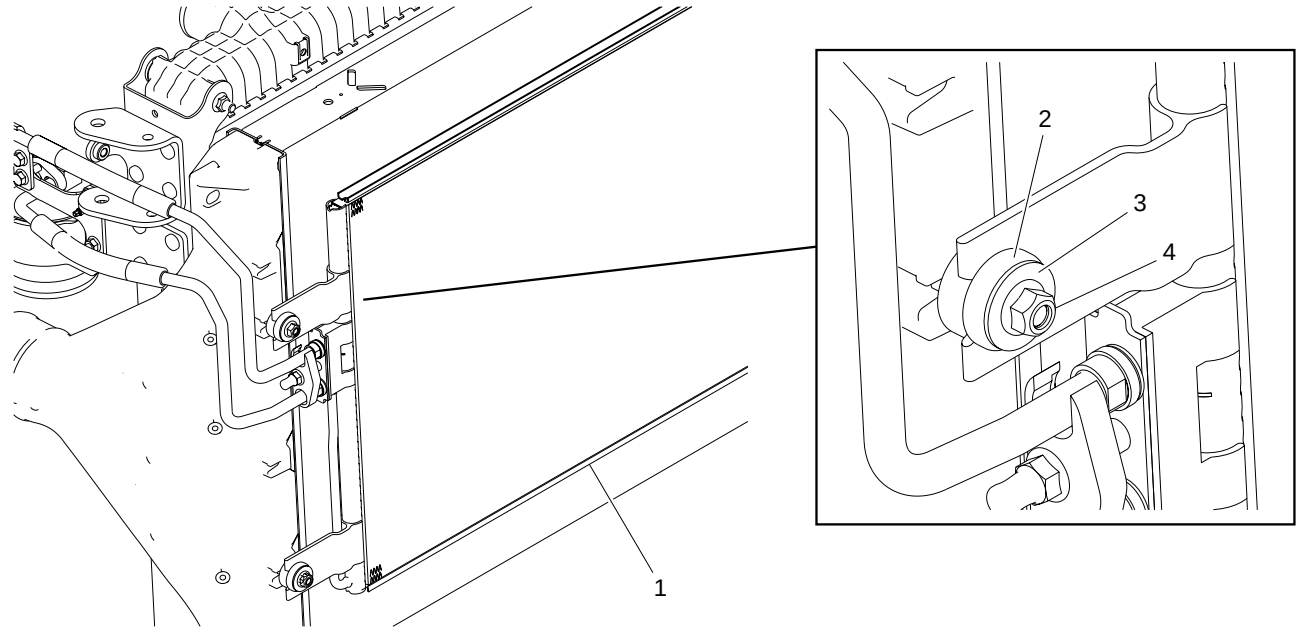

05/24/2012 f200757

1. A/C Condenser
2. Isolator
3. Washer
4. Nut

Fig. 8, A/C Condenser Installation

25. Install the new upper radiator hose. See **Fig. 5**.
26. Connect the transmission cooler lines.
27. Apply sealant (48-00094-141) to the threads of the fasteners, then install the fan. Tighten 30 lbf·ft (41 N·m).
28. Install the new lower radiator hose assembly. See **Fig. 11**.
29. Install the upper fan shroud. See **Fig. 10**.
30. Install the surge tank. See **Fig. 4**. For instructions, see **Section 20.00, Subject 110** of the *Coronado Workshop Manual*.
31. Install the new radiator strut rods. See **Fig. 15**. Tighten the radiator strut rod fasteners at the radiator 55 to 65 lbf·ft (75 to 90 N·m), and at the engine block 125 to 139 lbf·ft (171 to 188 N·m).
32. Tighten the radiator mounting nuts 140 to 170 lbf·ft (190 to 230 N·m).
33. Install the CAC plumbing at the turbocharger outlet and the CAC inlet. See **Fig. 2**.
34. Install the CAC plumbing at the CAC outlet and the engine inlet. See **Fig. 3**.
35. Install the A/C condenser as follows.
    - 35.1 Move the condenser into position and secure it temporarily. See **Fig. 8**.
    - 35.2 Position the receiver-drier and upper A/C line on their respective brackets and install the mounting nuts. See **Fig. 13**. Tighten the nuts 14 to 16 lbf·ft (19 to 22 N·m).
    - 35.3 Tighten the condenser mounting bolts 112 to 144 lbf·in (1266 to 1627 N·cm).

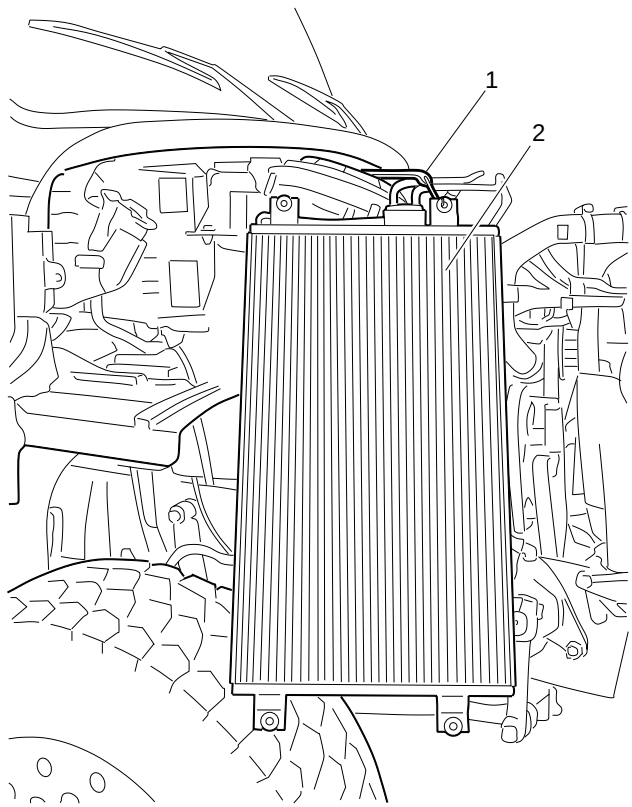

05/24/2012 f200760

1. Bungee Cord
2. Condenser

Fig. 9, Securing the A/C Condenser

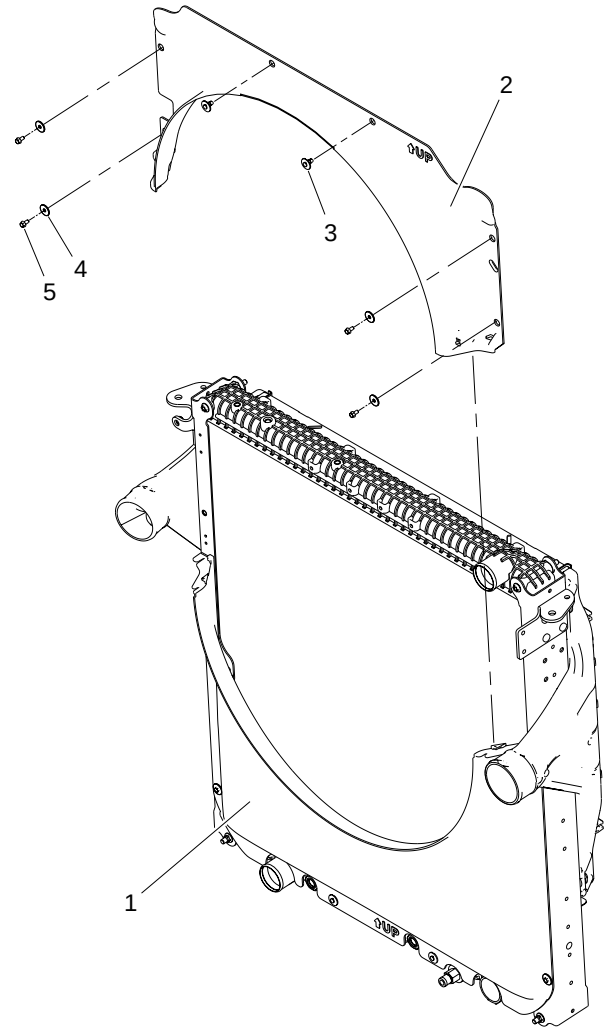

10/04/2012 f200756a

1. Lower Fan Shroud
2. Upper Fan Shroud
3. Push Fastener
4. Washer
5. Screw

Fig. 10, Fan Shroud Installation

36. Install the radiator baffles.
37. Fill the cooling system.
38. Start the engine and check for coolant and transmission fluid leaks. Repair as needed.
39. Check the transmission fluid level, and add fluid as needed.
40. Install the hood. For instructions, see **Subject 88.00, Subject 100** in the *Coronado Workshop Manual*.

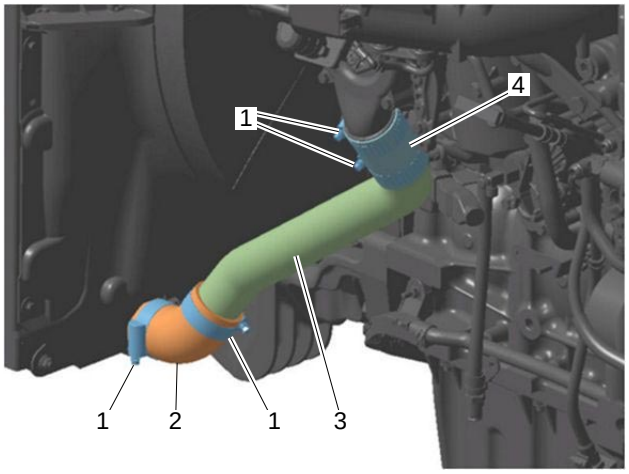

10/16/2012 f200772

1. Clamp
2. Radiator Hose Elbow
3. Tube
4. Radiator Hose

Fig. 11, Lower Radiator Hose Installation

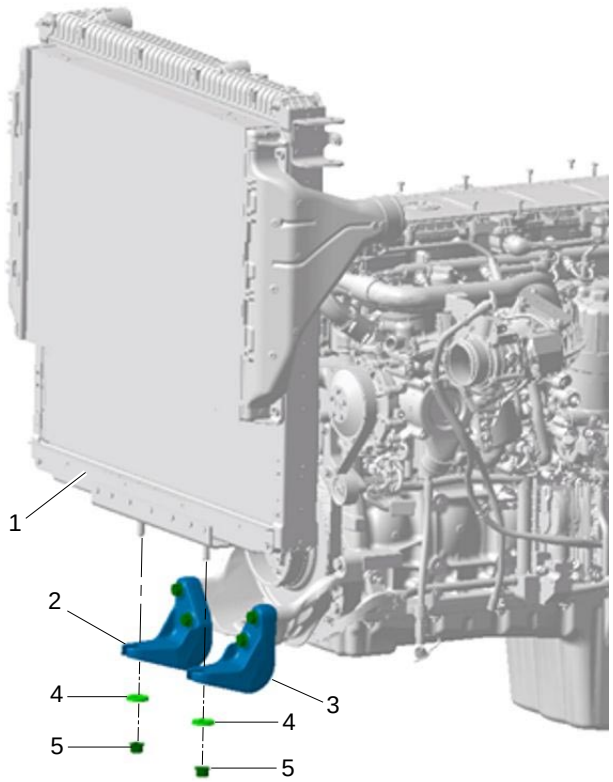

10/16/2012 f500411

1. Radiator
2. Lower Radiator Mounting Bracket, Right Side
3. Lower Radiator Mounting Bracket, Left Side
4. Washer
5. Nut

Fig. 12, Radiator Removal

41. Install the bumper. For instructions, refer to **Group 31** of the *Coronado Workshop Manual*.

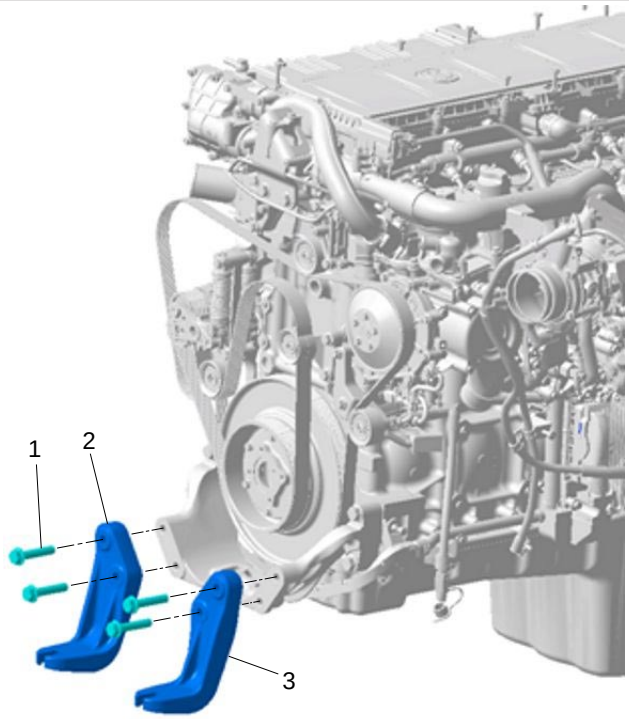

10/16/2012 f500412

1. Fastener
2. Lower Radiator Mounting Bracket, Right Side
3. Lower Radiator Mounting Bracket, Left Side

Fig. 13, Lower Isolated Radiator Mounting Bracket Installation

Freightliner Service Bulletin

FLA COE
FLB COE
FLD Conventional
Business Class
FLC 112 Conventional

Century Class Conventional
Argosy COE
Cargo
Columbia

> Coronado
Business Class M2
Cascadia
108SD/114SD

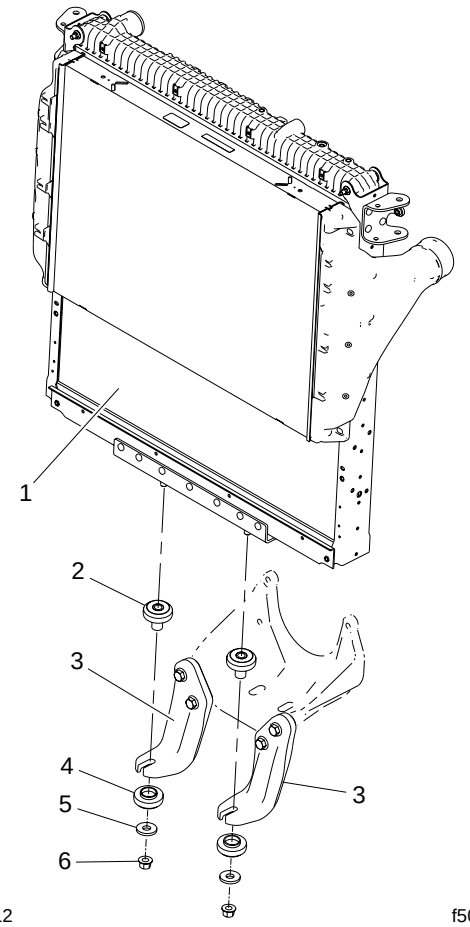

08/31/2012 f500401a

1. Radiator
2. Upper Isolator
3. Lower Radiator Mount
4. Lower Isolator
5. Washer
6. Nut

Fig. 14, Radiator Installation

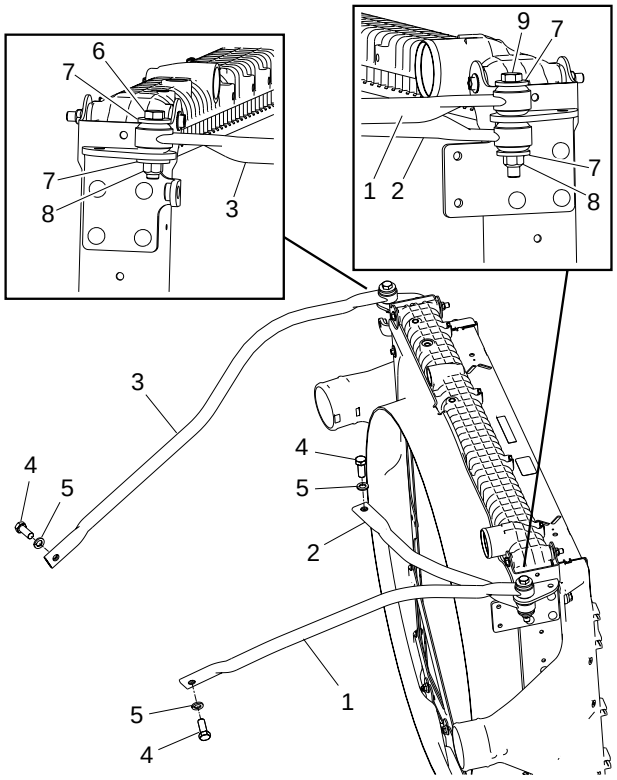

10/08/2012 f500407

1. Strut Rod, RH
2. Strut Rod, RH Bias
3. Strut Rod, LH
4. Capscrew
5. Washer
6. Bolt
7. Washer
8. Nut
9. Bolt

Fig. 15, Isolated Radiator Strut Rod Installation

Parts

Parts are available through the PDC. See **Table 1** for required changeover parts for the vehicle being serviced..

Coronado - AF 1700 Radiator, Required Parts				
Part	**DD13**	**DD15**	**ISX**	**Quantity**
Radiator	05-30350-003	05-30350-003	05-30350-002	1
Upper Support (Left)	A05-30370-000	A05-30303-000	A05-30373-000	1
Upper Support (Right)	A05-30371-000	A05-30304-000	A05-30374-000	1
Upper Support (Bias)	A05-30372-000	A05-30305-000	A05-30375-000	1
Lower Support (Left)	05-30368-000	05-30368-000	05-30368-000	1
Lower Support (Right)	05-30368-001	05-30368-001	05-30368-001	1
Fan	KYS 010024426	KYS 010024426	KYS 010024426	1
Isolators (kit)	BCD 27463 14	BCD 27463 14	BCD 27463 14	2
Screw-Cap,Hex,1/2-13,GR8,ZNDI	23-11751-250	23-11751-250	23-11751-250	1
Screw-Cap,Hex,1/2-13,GR8,ZN	23-11751-400	23-11751-400	23-11751-400	1
Nut-Hex,PT,1/2-13,C,ZN/AL,.448	23-13833-108	23-13833-108	23-13833-108	2
Washer-Hardened,Steel, .66X2.75"	01-20963-000	01-20963-000	01-20963-000	2

Table 1, Coronado - AF 1700 Radiator, Required Parts

PartsPro Global Annotation

It is highly recommended that a Global Annotation regarding this modification be entered in PartsPro. Global annotations give users a way to record and check after-factory installations and modifications for a particular vehicle. It is connected to a specific VIN, and is visible to anyone who views that serial number in PartsPro. Create and view Global Annotation as follows.

1. In PartsPro, enter the serial number (the last six characters of the VIN) in the "Vehicle" tab and press "Enter," or click the "Retrieve Design Group" button.
2. In the "Design Group" tab, click the Add Annotation icon. See **Fig. 16**.

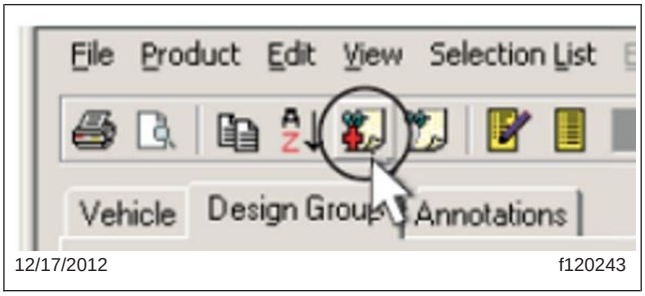

Fig. 16, Add Annotation Icon

3. In the "Add Annotation" window, mark the annotation as "Global" and enter text for the annotation.

   Suggested annotation text: The cooling system has been modified to an isolated mount type radiator. See Service Bulletin 20-72 for radiator, radiator mounting, and fan part numbers.

4. Click the "OK" button to submit.

   Daimler Trucks North America will review the content for publication.

   For additional information, click the "Help" button or Help → Contents in the top menu bar, and view the "Annotations" topic in PartsPro help, or refer to Freightliner or Western Star Parts Technical Bulletin: 00-009 for instructions.

Warranty

This procedure is warrantable only if the described condition exists and the repair is performed within the applicable base or extended coverage warranty period. If a failure is not found, this procedure is considered preventive and warranty does not apply.

Normal warranty applies. See **Table 2** for QuickClaim damage code and labor allowance information. Refer to this service bulletin by number at the beginning of the claim comments. See **Table 3** for OWL VMRS codes and labor allowance information. Enter this service bulletin number in the *Service Bulletin #:* field.

QuickClaim Damage Code and Labor Allowance			
Damage Code	**SRT Code**	**Description**	**Time: Hours**
266-000A05609	266-5030A	Coronado 1700 Isolated Radiator Update	3.7

Table 2, QuickClaim Damage Code and Labor Allowance

OWL VMRS Codes and Labor Allowance					
Primary Failed Part	**Component Code**	**Cause Code**	**SRT Code**	**Description**	**Time: Hours**
05-29621-003	042-002-001	12	266-5030A	Coronado 1700 Isolated Radiator Update	3.7

Table 3, OWL VMRS Codes and Labor Allowance