WC38 - Retrofitting Belt Guide (Workshop Campaign)

Vehicle Type: **Boxster (981)/Boxster S (981)**

Model Year: **2013**

Concerns: **Belt deflector for front three-point belt**

Information: This is to inform you of a voluntary Workshop Campaign on the above-mentioned vehicles. There is the possibility that the area behind the cover for the belt opening is visible on the affected vehicles due to increased component tolerances.

To improve the appearance of the belt opening, an additional belt guide will be retrofitted on the belt deflection fitting in order to conceal it.

Action Required: Retrofit additional belt guide on the belt deflection fitting for the front three-point belt.

Affected Vehicles: The VIN(s) can be checked by using PIWIS Vehicle Information link to verify if the campaign affects the vehicle. This Campaign is scope specific to the VIN! Failure to verify in PIWIS may result in an improper repair. This campaign affects 1,495 vehicles in North America.

Note: **DO NOT ORDER PARTS FOR THIS CAMPAIGN. THEY WILL BE AUTOMATICALLY ALLOCATED TO YOUR DEALERSHIP.**

Parts Info:

981.803.835.01	⇒ Belt guide (left)	1
981.803.836.01	⇒ Belt guide (right)	1

Work Procedure: See Attachment “A”.

Claim Submission: See Attachment “B”.

Attachment "A": **Work Procedure**

Information

The procedure described here must be carried out **on both belt deflectors for the front three-point belt**.

The figures show the work to be carried out on the **left** side of the vehicle in direction of travel. The work on the right side of the vehicle must be carried out in the same way.

1 Open convertible top.

2 Retrofit belt guide on the **left** side of the vehicle.

2.1 Loosen belt deflector cover ⇒ *Figure 1* **-1-** using a plastic wedge ⇒ *Figure 1* **-2-** (⇒ *Figure 1* **-arrows A-**).

2.2 Remove belt deflector cover ⇒ *Figure 1* **-1-** from the catches ⇒ *Figure 1* **-arrows B-** and leave it hanging on the three-point seat belt.

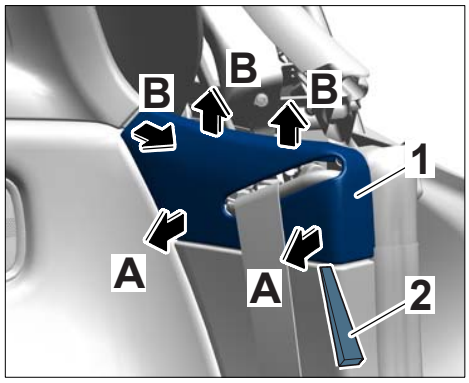

Figure 1

2.3 Press in belt guide ⇒ *Figure 2* **-1-** on the belt deflection fitting ⇒ *Figure 2* **-2-** (⇒ *Figure 2* **-arrow-**) so that the belt strap ⇒ *Figure 2* **-3-** is positioned between the belt deflection fitting and belt guide.

2.4 Re-install belt deflector cover.

2.5 Check that the seat belt extends and retracts properly.

2.5.1 Pull the belt strap fully out of the automatic belt device.

2.5.2 Allow the belt strap to retract back into the automatic belt device.

If the seat belt does not extend or retract correctly, first check that the belt guide is engaged correctly in the belt deflection fitting.

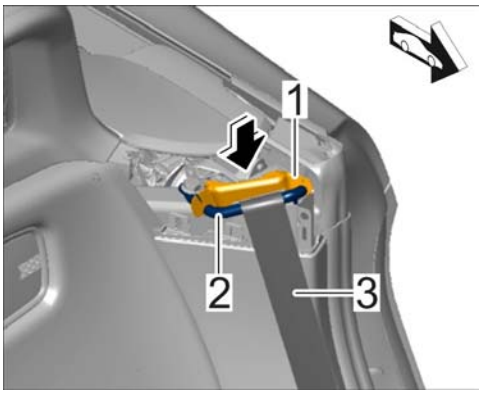

Figure 2

3 Retrofit belt guide on the **right** side of the vehicle.

To do this, complete Steps 2.1 to 2.5 on the right side of the vehicle.

2012© Porsche Cars North America, Inc.

4 Close convertible top.

5 Enter the workshop campaign in the Warranty and Maintenance booklet.

Attachment "B": **Claim Submission** - Workshop Campaign WC38
Warranty claims should be submitted via WWS/PQIS.
Open campaigns may be checked by using either the PIWIS Vehicle Information system or through PQIS Job Creation.
Labor, parts, and sublet will be automatically inserted when Technician is selected in WWS/PQIS. If necessary, the required part numbers will need to be manually entered into warranty system by the dealer administrator.

Scope 1:

Working time:

Retrofitting belt guide — Labor time: **11 TU**
Includes: Removing and installing belt deflector cover

Parts required:

981.803.835.01	Belt guide, left	1
981.803.836.01	Belt guide, right	1

⇒ **Damage code WC38 066 000 1**

Important Notice: Porsche Cars N.A Technical Bulletins are intended for use by professional technicians, not a "Do-it-yourselfer." They are written to inform these technicians of conditions that may occur on some vehicles, or to provide information that could assist in the proper service of a vehicle. Special tools may be required to perform certain operations identified in these bulletins. Use of tools and procedures other than those recommended in these bulletins may be detrimental to the safe operation of your vehicle. Properly trained technicians have the equipment, tools, safety instructions and know-how to do a job properly and safely. If a condition is described, do not assume that the bulletin applies to your vehicle, or that your vehicle will have that condition. See your Porsche Dealer for information on whether your vehicle may benefit from the information. Part numbers listed in these bulletins are for reference only. Always check with your authorized Porsche dealer to verify correct part numbers.

© Porsche Cars North America, Inc.

Dealership Distribution Routing	Service Manager	_____	Shop Foreman	_____	Service Technician	_____	_____	_____	_____
	Asst. Manager	_____	Warranty Admin.	_____	Service Technician	_____	_____	_____	_____

Dr. Ing. h.c. F. Porsche AG is the owner of numerous trademarks, both registered and unregistered, including without limitation the Porsche Crest®, Porsche®, Boxster®, Carrera®, Cayenne®, Cayman™, Panamera®, Tiptronic®, VarioCam®, PCM®, 911®, 4S®, FOUR, UNCOMPROMISED.® and the model numbers and distinctive shapes of Porsche's automobiles such as, the federally registered 911 and Boxster automobiles. The third party trademarks contained herein are the properties of their respective owners. Some vehicles may be shown with non-U.S. equipment. Porsche recommends seat belt usage and observance of traffic laws at all times.

Printed in the USA